CONCOURSE "D" REMODELING AND GATE ADDITION

GENERAL MITCHELL INTERNATIONAL AIRPORT

5300 SOUTH HOWELL AVENUE - MILWAUKEE, WISCONSIN 53207
MILWAUKEE COUNTY PROJECT # 02-WB6461

ARCHITECT:

MILLER, MEIER, KENYON, COOPER ARCHITECTS AND ENGINEERS, INC.
756 NORTH MILWAUKEE STREET - MILWAUKEE, WISCONSIN 53202
ARCHITECTS PROJECT # 87737

CONSULTANTS:

PSJ ENGINEERING- HVAC, PLUMBING
350 WEST GREEN TREE ROAD - MILWAUKEE, WISCONSIN 53217

LEEDY & PETZOLD - ELECTRICAL
345 NORTH 95TH STREET - MILWAUKEE, WISCONSIN 53226

1/8" AND 1/4" PLAN KEY

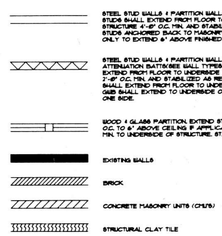

INDEX OF DRAWINGS:

ARCHITECTURAL

	TITLE PAGE
A-1	GRADE LEVEL PLAN
A-2	SECOND FLOOR PLAN
A-3	REFLECTED CEILING-2ND
A-4	-NOT USED-
A-5	BUILDING SECTIONS & WALL TYPES
A-6	EXT. ELEVATION ROOF, LL REFL. CLG PLAN
A-7	INTERIOR ELEVATIONS 1/8
A-8	SCHEDULES & DETAILS
A-9	SECTION DETAILS
A-10	DETAILS

STRUCTURAL

S-1	FOUNDATION PLAN & DETAILS
S-2	FRAMING PLANS

ELECTRICAL

E-1	GROUND LEVEL LIGHTING & POWER
E-2	SECOND LEVEL LIGHTING
E-3	SECOND LEVEL POWER AND SYSTEMS
E-4	SYMBOLS, DETAILS & RISERS

MECHANICAL

M-1	SCHEDULES
M-2	GRADE LEVEL PLAN
M-3	DETAILS AND SECTIONS
M-4	SECOND LEVEL PLUMBING
M-5	SECOND LEVEL HVAC
M-6	GRADE LEVEL DEMOLITION
M-7	SECOND LEVEL DEMOLITION

22,500 FT^2
IN TOTAL "D" CONCOU
UPPER LEVEL

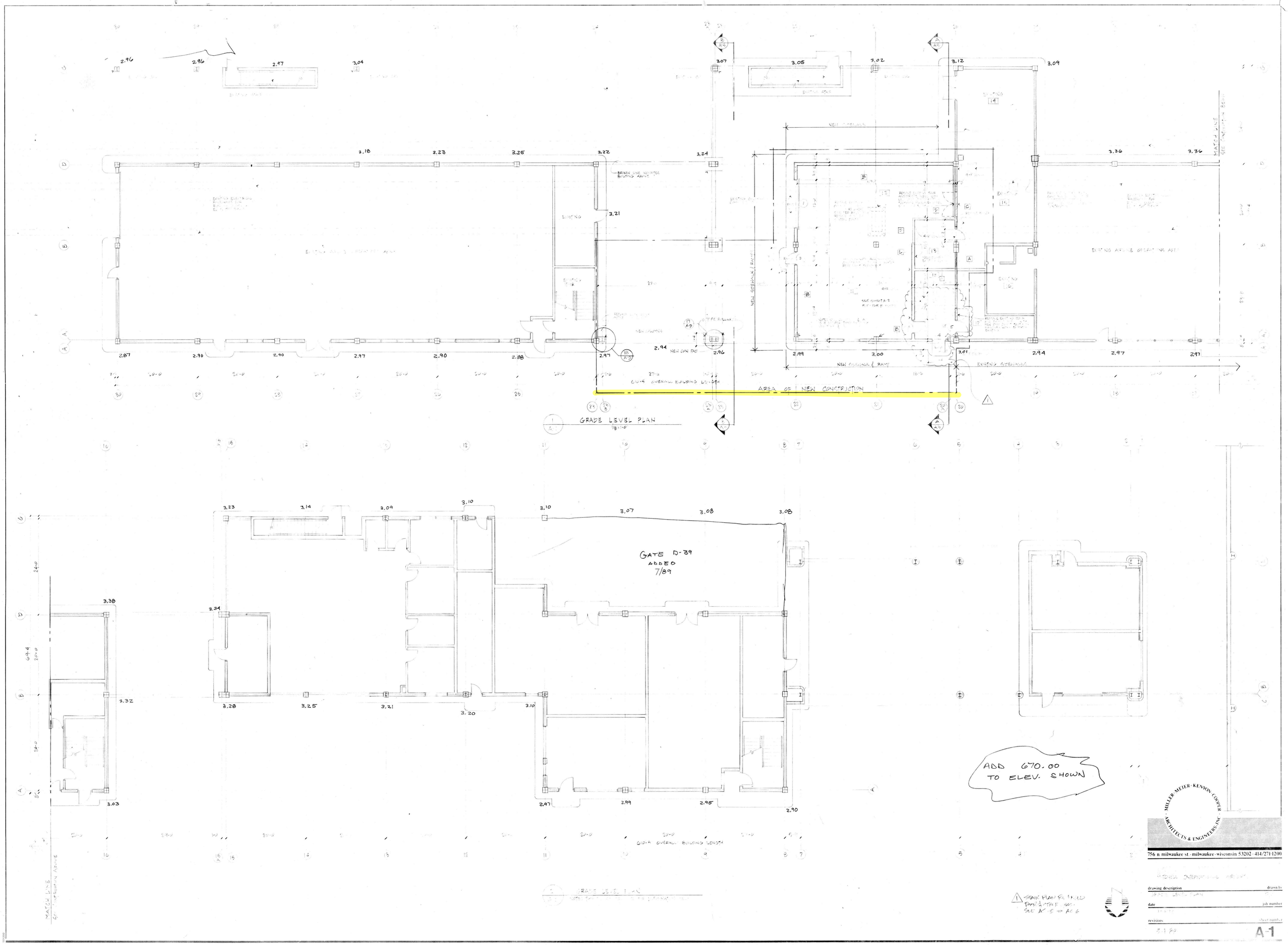

MILLER·MEIER·KENYON·COOPER
ARCHITECTS & ENGINEERS INC

756 n. milwaukee st. · milwaukee · wisconsin 53202 · 414/271-1200

MITCHELL INTERNATIONAL AIRPORT

drawing description: GRADE LEVEL PLAN

drawn by:

date: 1-8-89

job number:

revisions: 3-1-89

sheet number: A-1

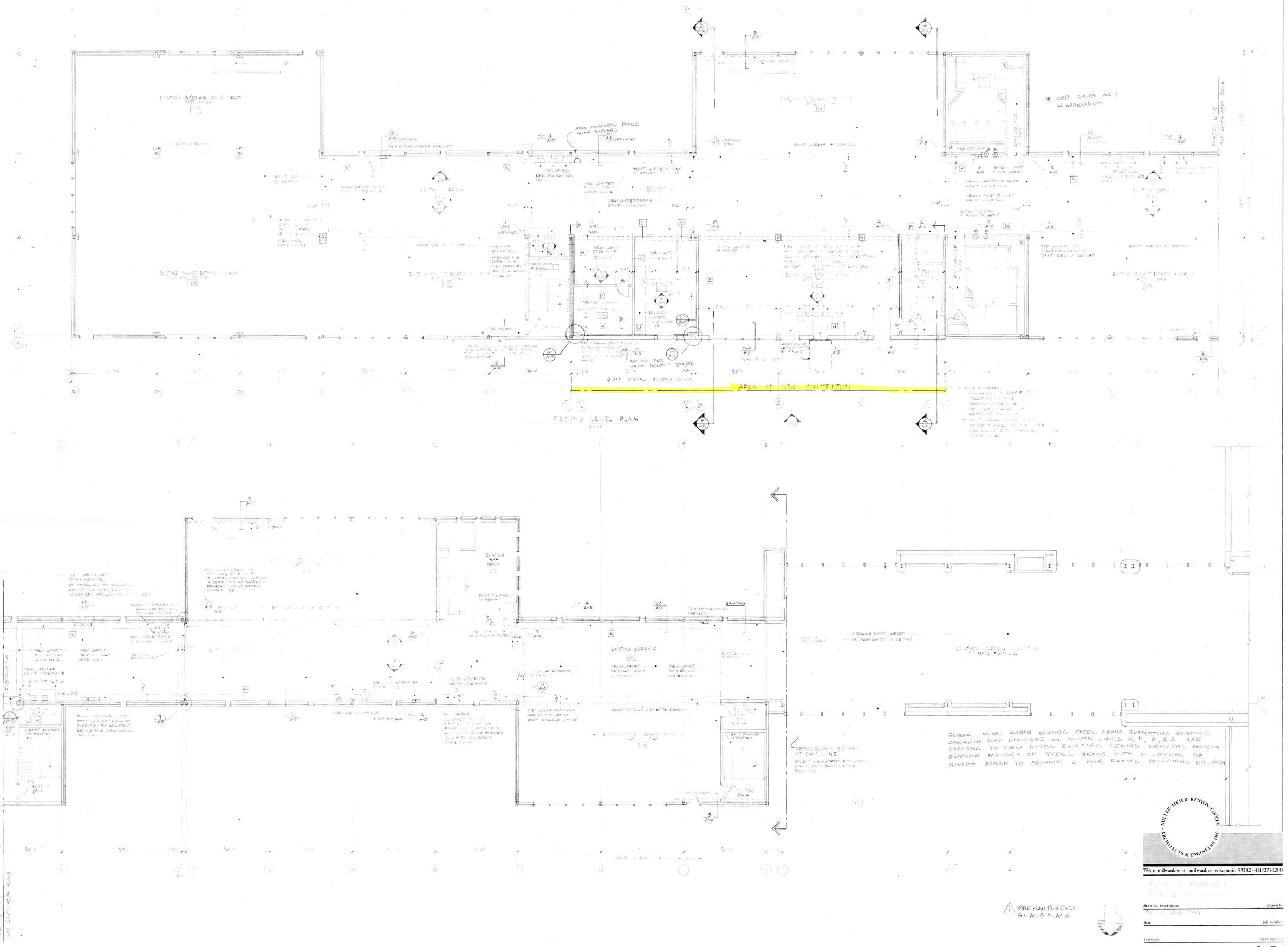

SECOND LEVEL PLAN
AREA OF NEW CONSTRUCTION
* SEE DRWG. AC-1 IN ADDENDUM.
ADD COURTESY PHONE WITH ANGLES
EXISTING CORRIDOR
GENERAL NOTE: WHERE EXISTING STEEL BEAMS SUPPORTING EXISTING CONCRETE ROOF STRUCTURE ON COLUMN LINES G, D, B, & A ARE EXPOSED TO VIEW AFTER EXISTING CEILING REMOVAL PROTECT EXPOSED PORTIONS OF STEEL BEAMS WITH 2 LAYERS 5/8" GYPSUM BOARD TO PROVIDE 2 HOUR RATING FOLLOWING U.L. N501
MILLER·MEIER·KENYON·COOPER·ARCHITECTS & ENGINEERS INC.
756 n. milwaukee st. · milwaukee · wisconsin 53202 · 414/271-1200
drawing description
drawn by
date
job number
revisions
sheet number
A-2

MILLER·MEIER·KENYON·COOPER·ARCHITECTS & ENGINEERS INC

756 n. milwaukee st · milwaukee · wisconsin 53202 · 414/271-1200

CONCOURSE 'D' REMODELING & GATE ADDITION
MITCHELL INTERNATIONAL AIRPORT

drawing description	drawn by
RESTRICTED CEILING PLAN	DV
date	job number
1-12-88	87737
revisions	sheet number

A-3

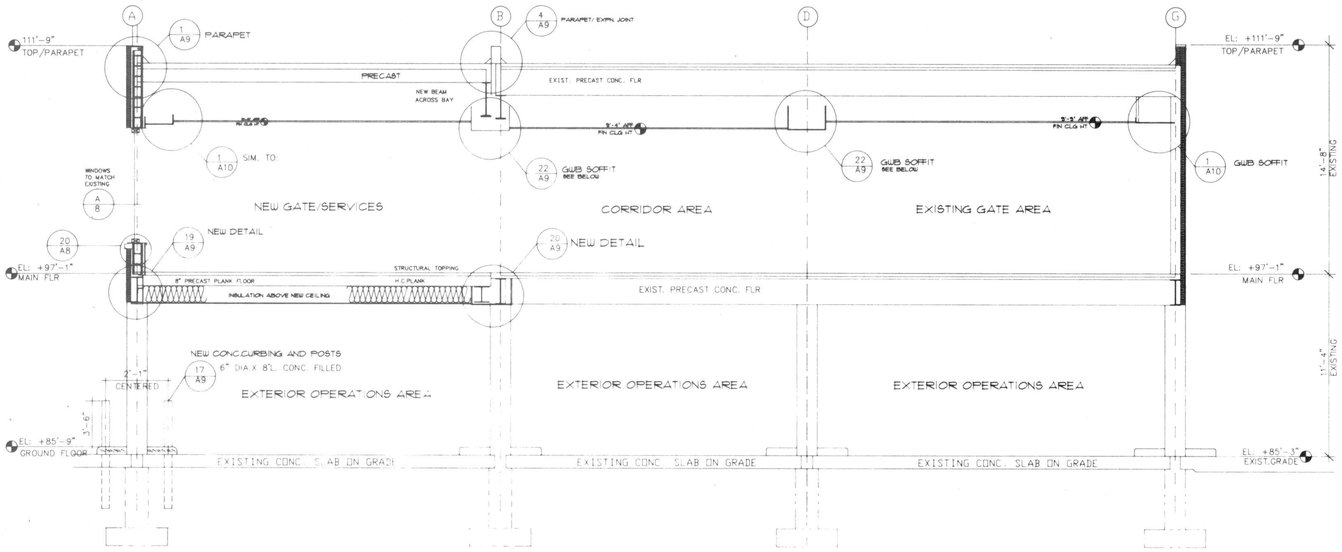

SECTION "B-B"

SCALE: 1"=4'-0"

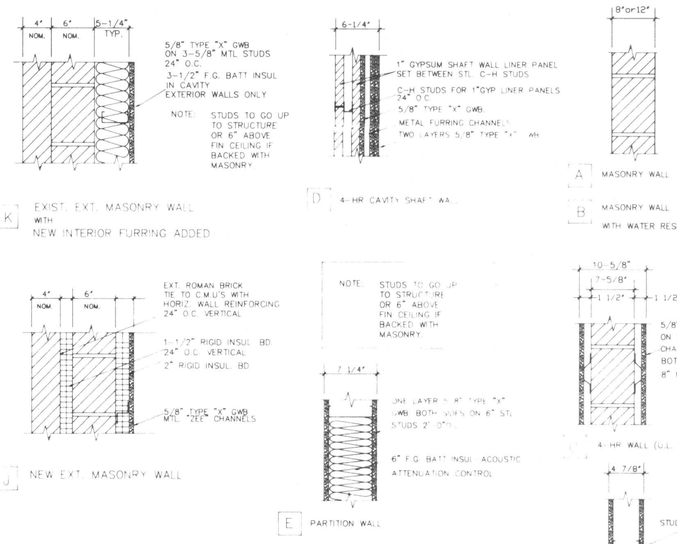

WALL TYPES

NOT TO SCALE

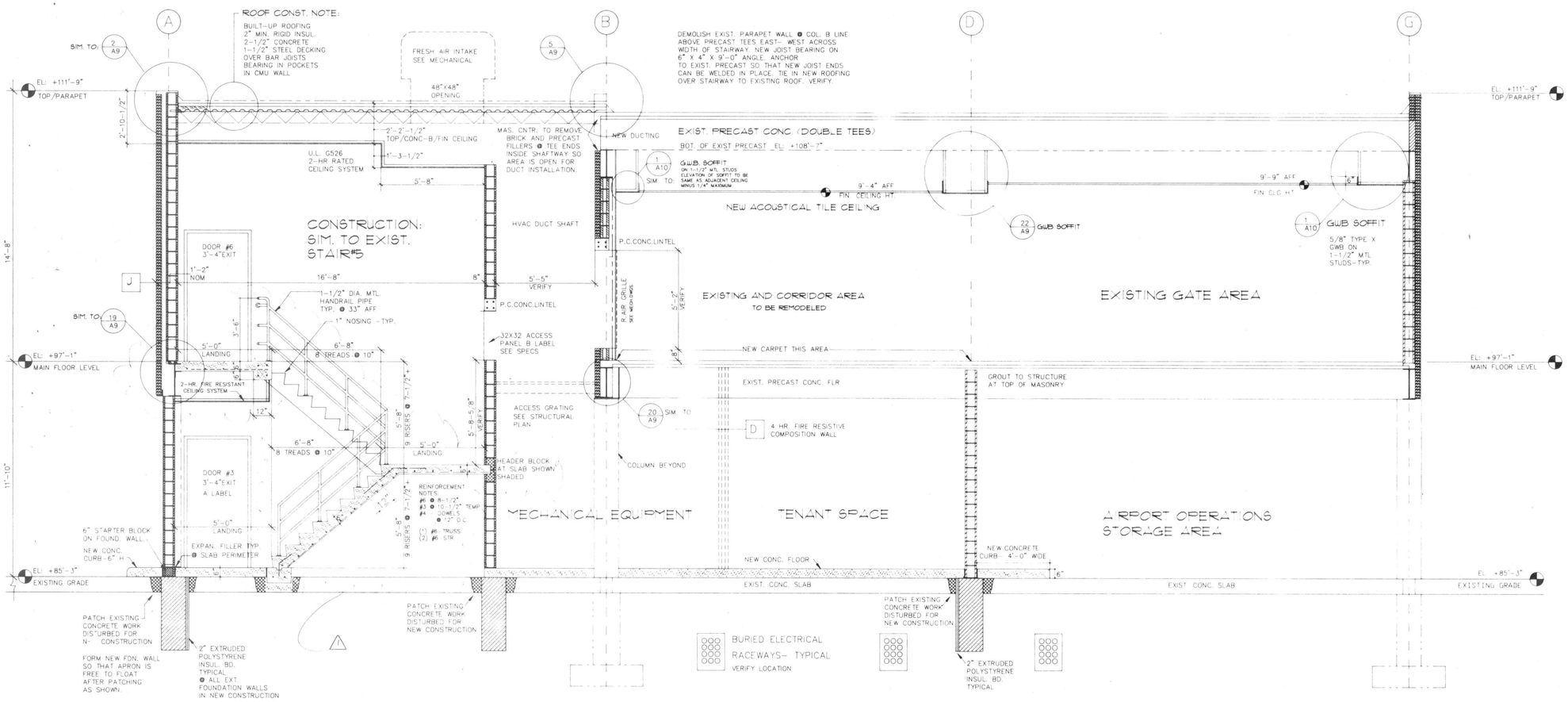

SECTION "A-A"

SCALE: 1"= 2'-8" (3/8"=1'-0")

STAIR PLAN WINDOWS SEE A-2 & A-3

MILLER-MEIER-KENYON-COOPER ARCHITECTS & ENGINEERS, INC.
756 n. milwaukee st. · milwaukee, wisconsin 53202 · 414/271-1200

CONCOURSE 'D' REMODELING
GATE ADD PLAN
MITCHELL INTERNATIONAL AIRPORT

drawing description	drawn by
SECTION A-A	MK
date	job number
1-12-00	37737
revisions	sheet number
2-4-03	A-5

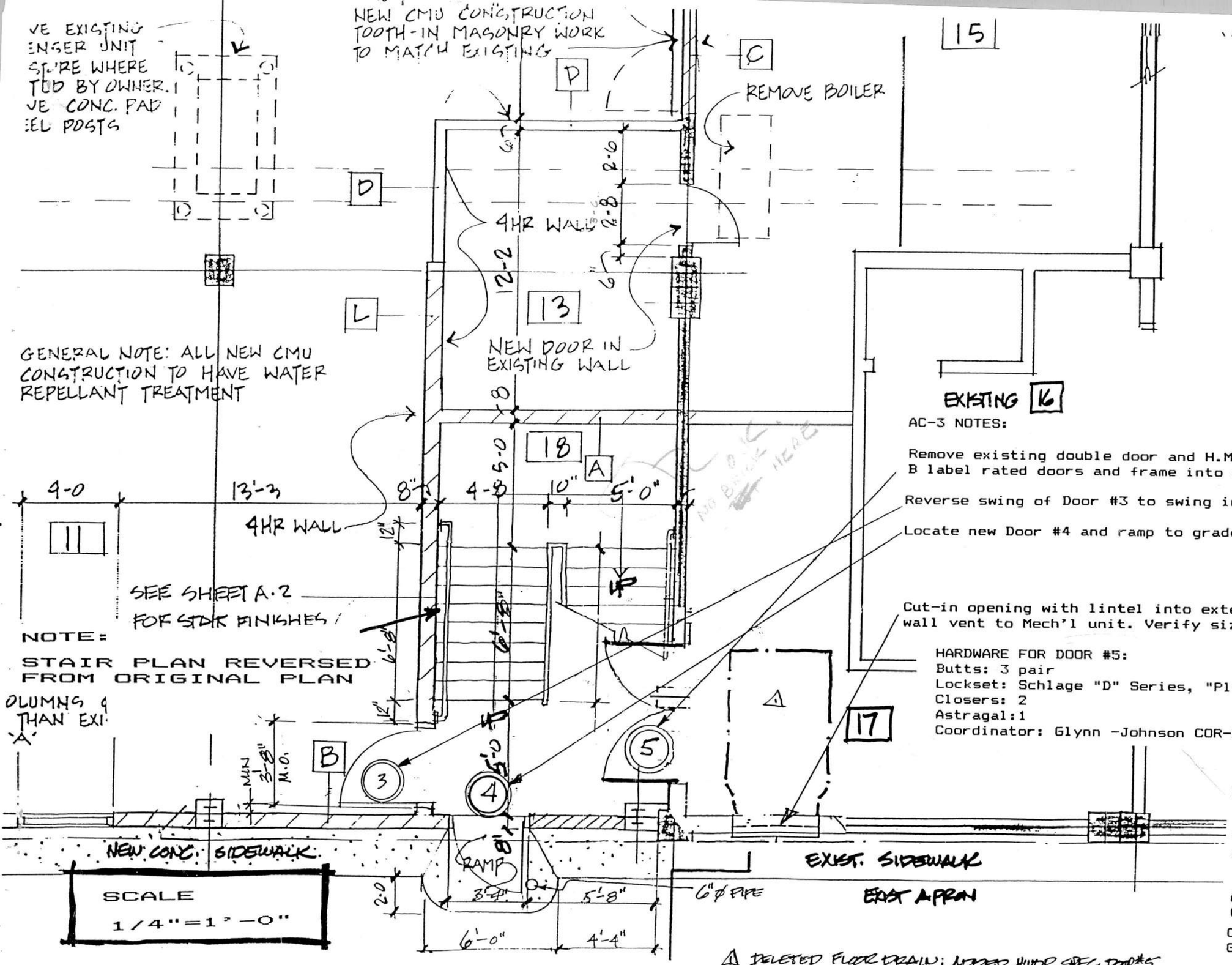

AC-3 NOTES:

Remove existing double door and H.M. frame and install new B label rated doors and frame into existing opening.

Reverse swing of Door #3 to swing into Room #11.

Locate new Door #4 and ramp to grade as shown.

Cut-in opening with lintel into exterior wall for through-wall vent to Mech'l unit. Verify size and location.

HARDWARE FOR DOOR #5:
Butts: 3 pair
Lockset: Schlage "D" Series, "Plymouth Design", D 70 PD
Closers: 2
Astragal: 1
Coordinator: Glynn -Johnson COR-2

Date: 3/9/88
Drawing: Stairway Modification Grade level plan

This Clarification is comprised of documents:

AC-3 THROUGH AC-6

Architectural Document Clarification to:

CONCOURSE "D" REMODELING & GATE ADDITION

Architect's Job 87737 c1
Sheet Number AC-3.1

MILLER·MEIER·KENYON·COOPER · ARCHITECTS & ENGINEERS, INC.
756 n. milwaukee street
milwaukee, wisconsin 53202
(414) 271-1200
milwaukee • ft. lauderdale
tampa • west palm beach

△1 DELETED FLOOR DRAIN; ADDED HWDR SPEC DOOR #5
3.8.88

NOTE: STAIR PLAN REVERSED FROM ORIGINAL PLAN

NOTES:

1) Stair plan has been reversed from original plan.

2) Handrail at West wall upper landing to be minimum 2" away from existing brick and continue straight and parallel to center railing to 12" beyond last riser at midlanding. Because existing brick stops part way down stairs, handrail will be 6" from existing wall at lower end.

3) OPENINGS:

Provide openings as shown for ducting to be installed by others.

Construction of the openings, 2 hour rated ceiling construction and other rated construction to be coordinated by Construction Manager as part of work being performed under this contract.

If ducting and fire proctection systems by others are not in place when work being performed under this contract is completed, openings shown are to be filled in with masonry knockout panels by Masonry Contractor.

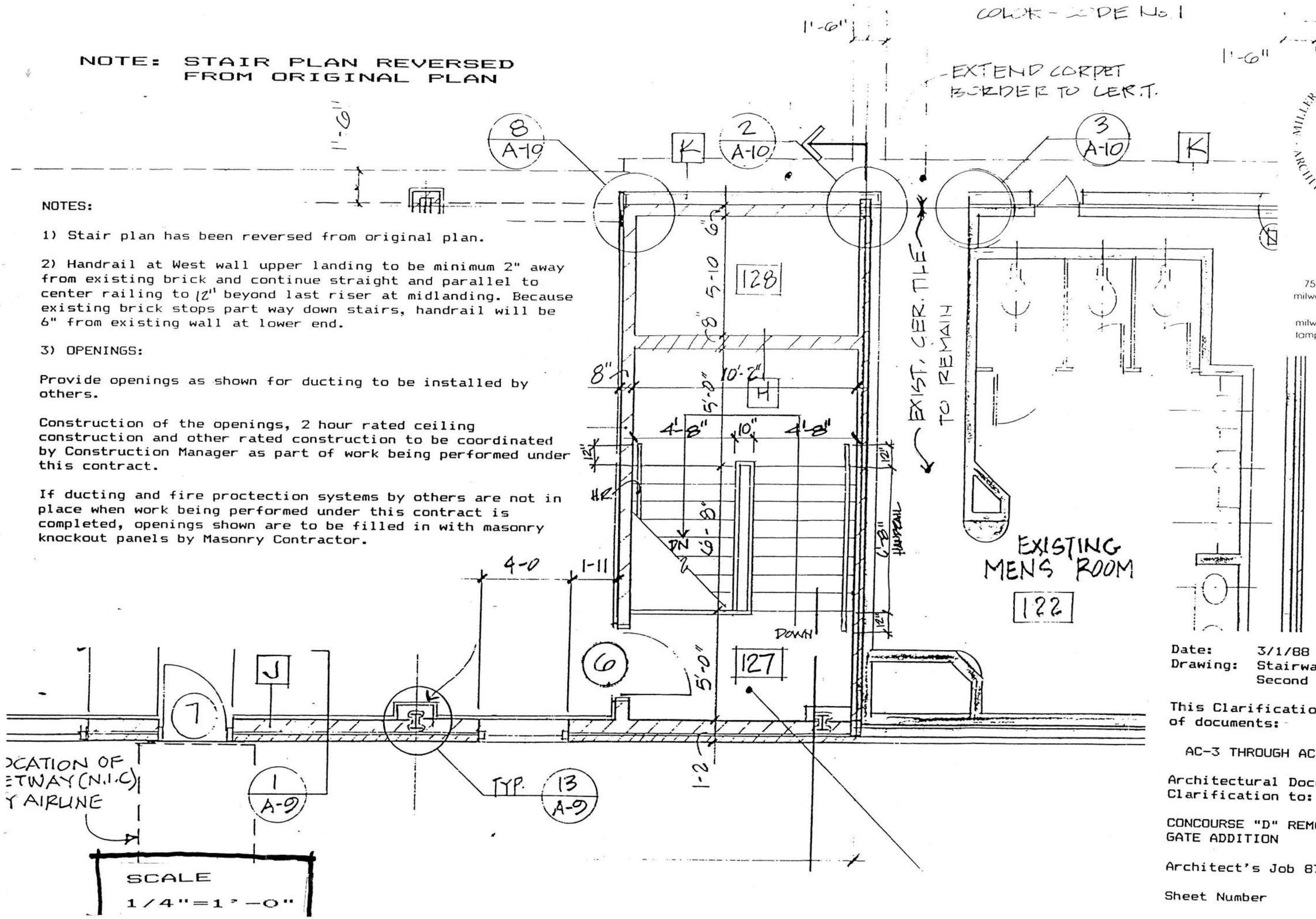

MILLER·MEIER·KENYON·COOPER·INC.
ARCHITECTS & ENGINEERS

756 n. milwaukee street
milwaukee, wisconsin 53202
(414) 271-1200
milwaukee • ft. lauderdale
tampa • west palm beach

Date: 3/1/88
Drawing: Stairway Modification Second Floor Plan

This Clarification is comprised of documents:

AC-3 THROUGH AC-6

Architectural Document Clarification to:

CONCOURSE "D" REMODELING & GATE ADDITION

Architect's Job 87737 c1

Sheet Number AC-4

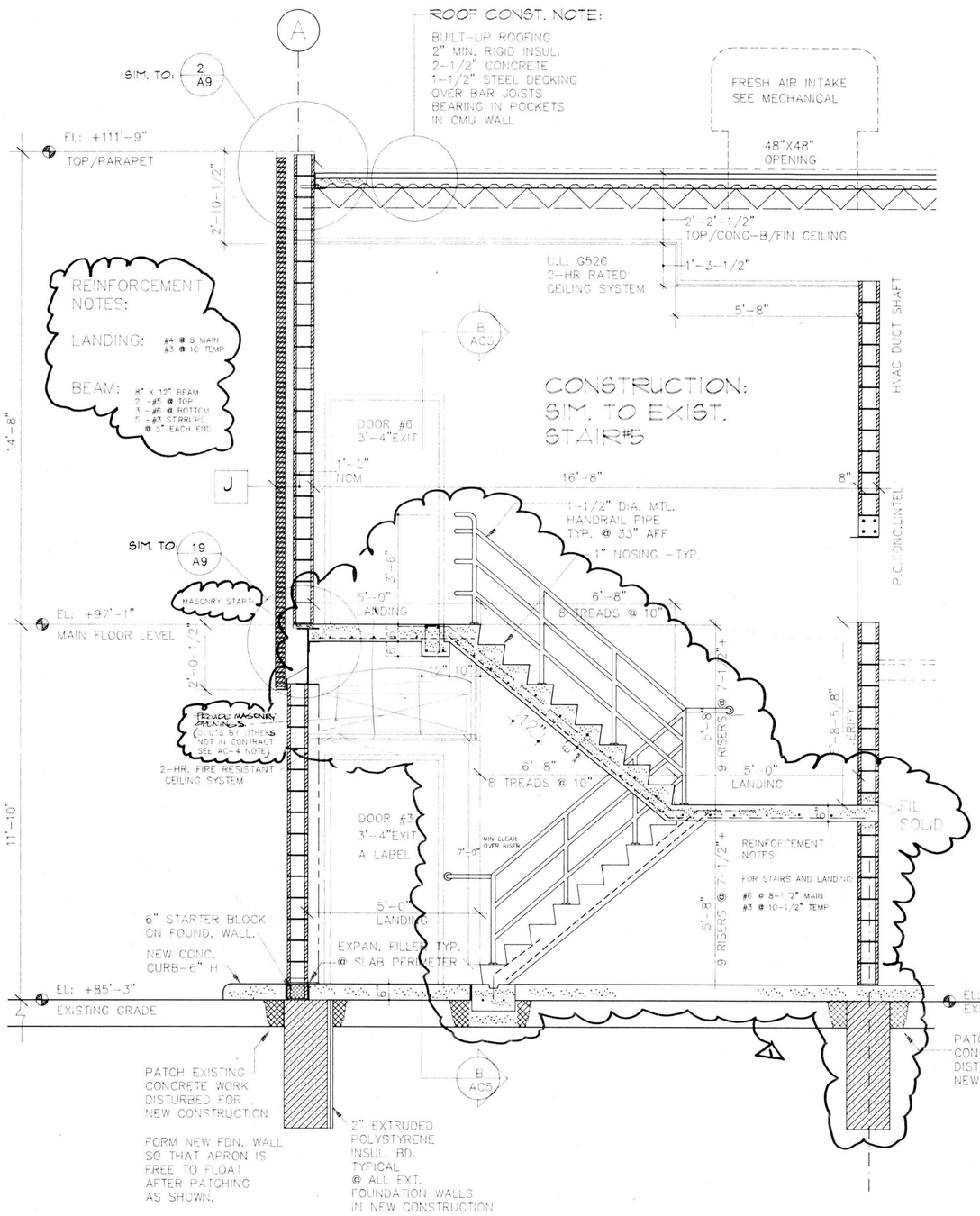

1 AC5 SECTION: N/S AT STAIRS

SCALE = 1"= 2'-0"

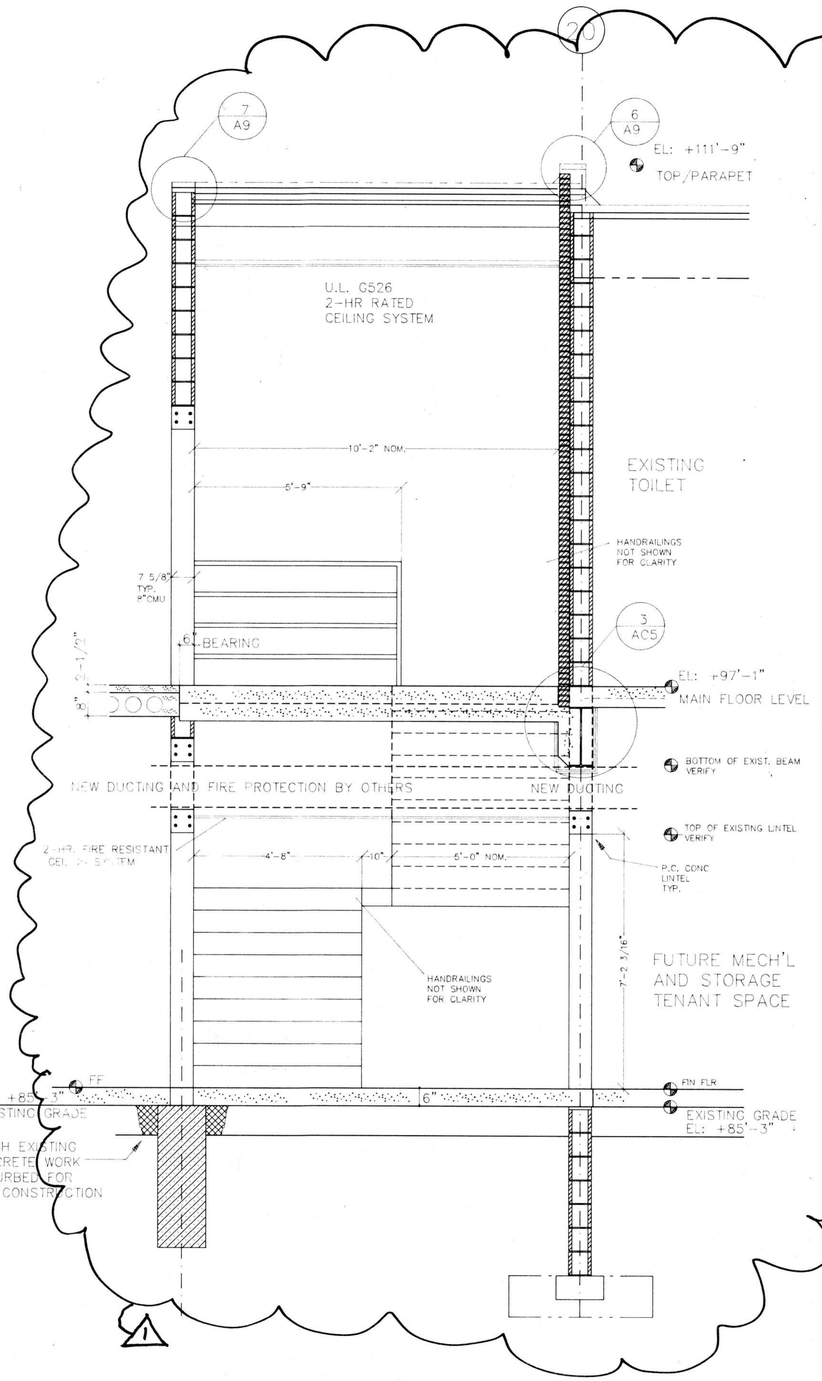

B AC5 SECTION: E/W AT STAIRS

SCALE = 1"= 2'-0"

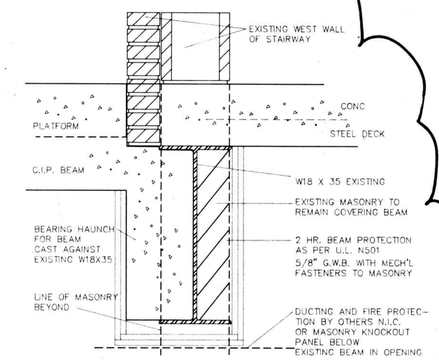

3 AC5 DETAIL AT BEAM-FIREPROOFING

SCALE: 1" = 1'-6"

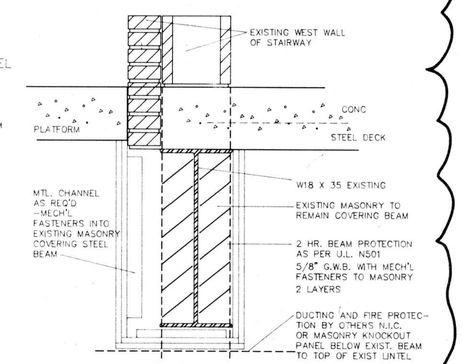

4 AC5 DETAIL BEYOND BRG. HAUNCH

SCALE: 1" = 1'-6"

ARCHITECTURAL CLARIFICATION:

THIS CLARIFICATION IS COMPOSED OF DOCUMENTS AC-3 THROUGH AC-6, ISSUED 4 MARCH 1988

MILLER, MEISK, KENYON, COOPER · ARCHITECTS & ENGINEERS, INC.

SCALE: VARIES

756 n. milwaukee st.-milwaukee-wisconsin 53202-414/271-1200

CONCOURSE "D" REMODELING
& GATE ADDITION
MITCHELL INTERNATIONAL AIRPORT

drawing description	drawn by
SECTIONS AND DETAILS	PMc
date	job number
9 MAR 88	87737 C1
revisions	sheet number

1 CHANGES FROM DRAWING A-5-3.9.88 FILE

AC-5

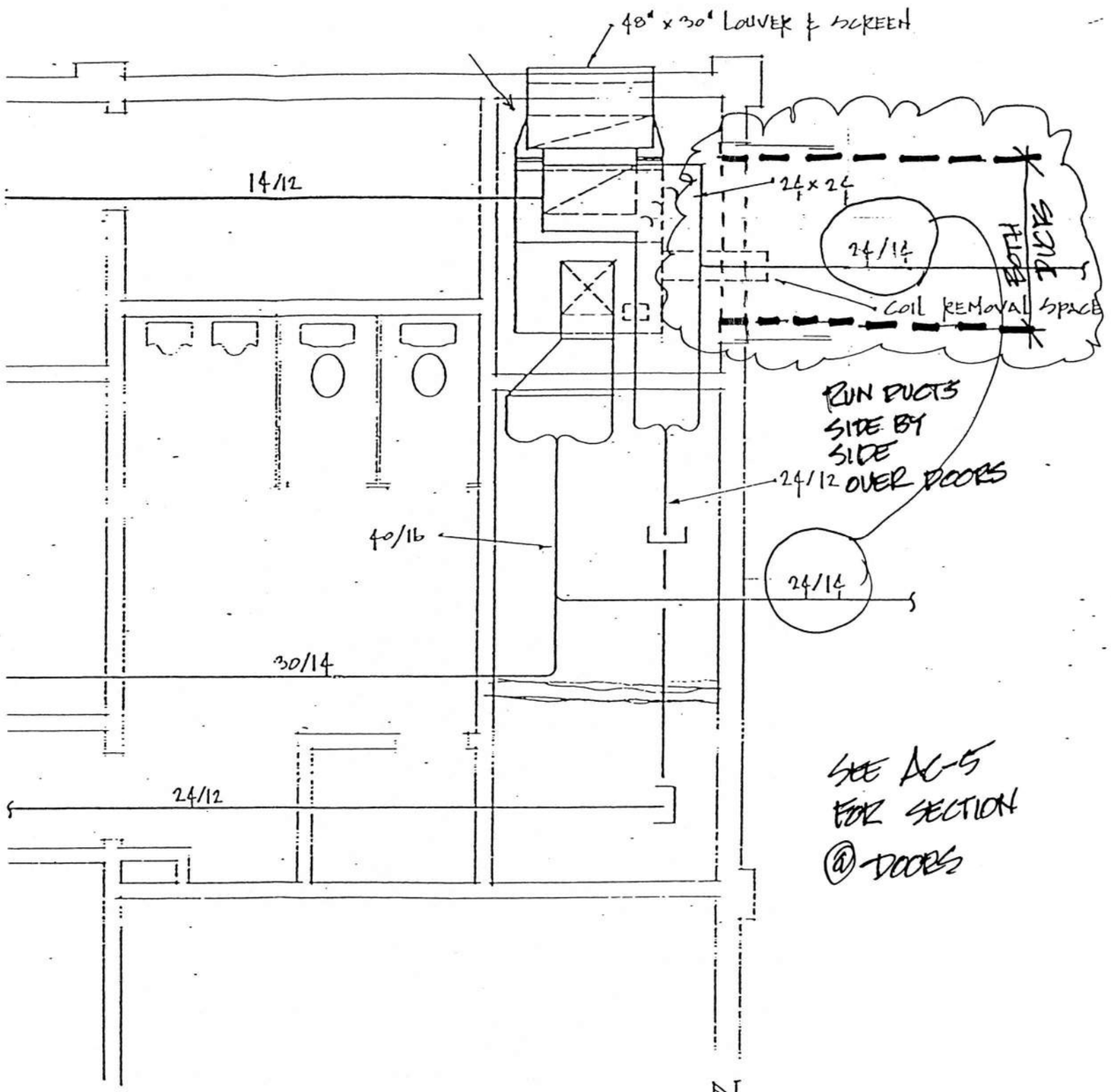

SEE AC-5 FOR SECTION @ DOORS

PARTIAL FLOOR PLAN

SCALE: NTS

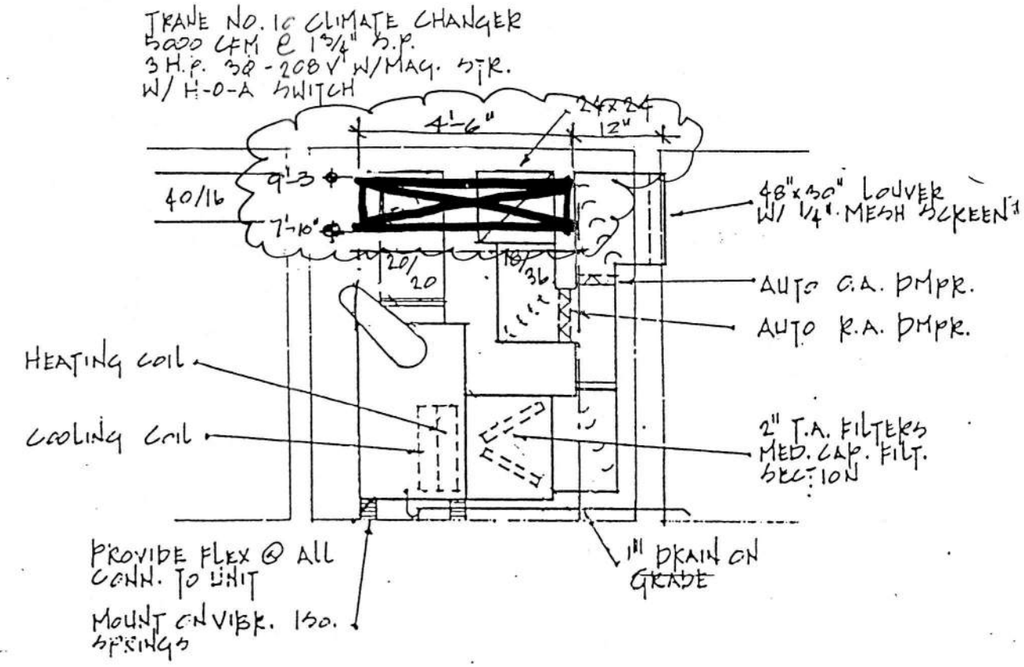

HVAC - UNIT DETAIL

SCALE: NTS

FEB 16 1988

MILLER · MEIER · KENYON · COOPER · ARCHITECTS & ENGINEERS, INC.

756 n. milwaukee street
milwaukee, wisconsin 53202
(414) 271-1200
milwaukee • ft. lauderdale
tampa • west palm beach

Date: 3/4/88
Drawing: Stairway Modification
Mechanical equipment
Sketches

This Clarification is comprised of documents:

AC-3 THROUGH AC-6

Architectural Document Clarification to:

CONCOURSE "D" REMODELING & GATE ADDITION

Architect's Job 87737 c1

Sheet Number AC-6

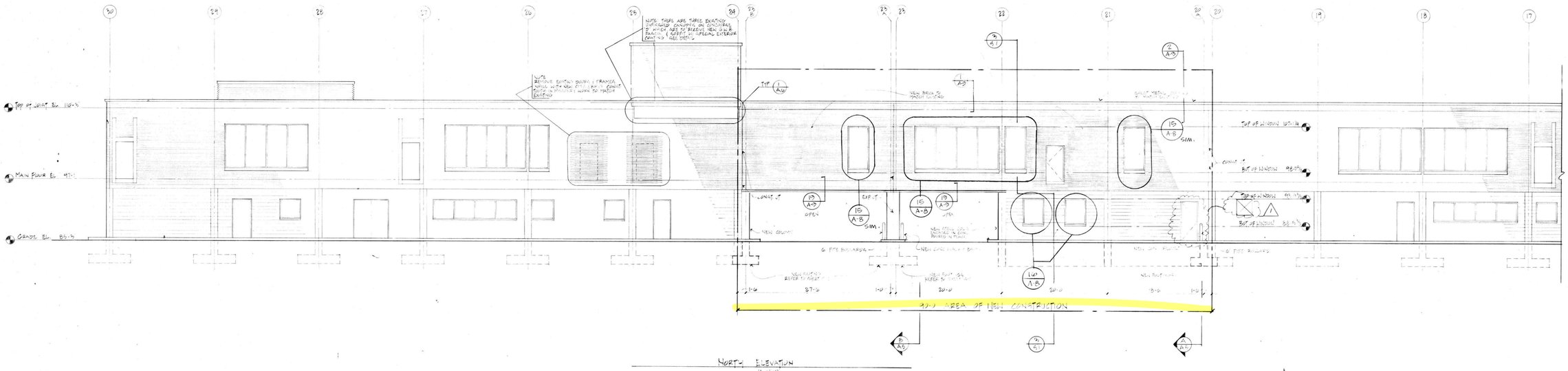

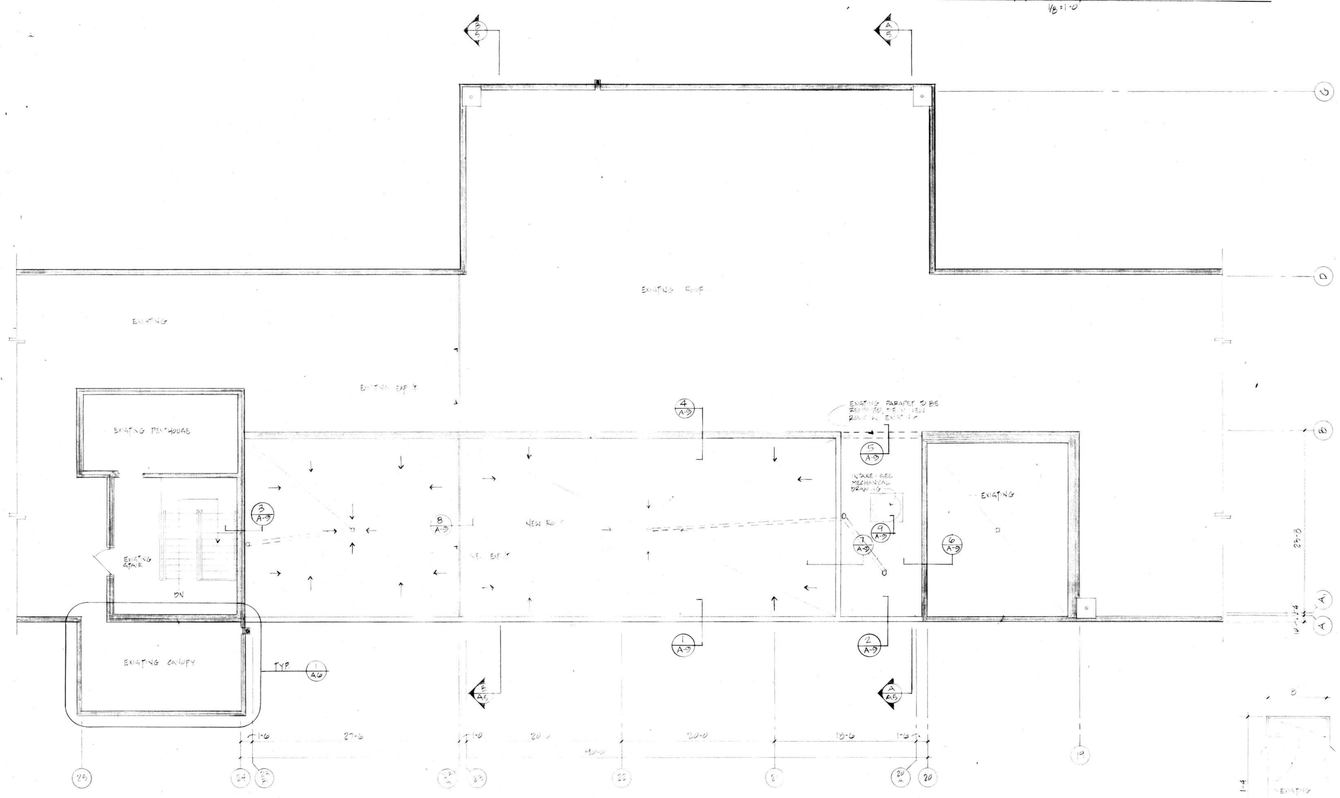

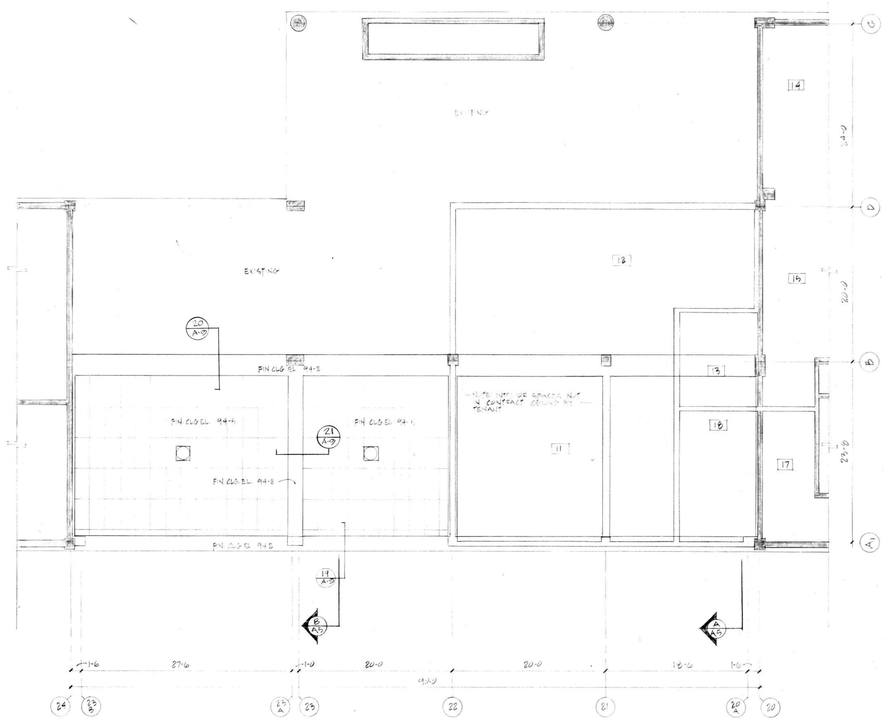

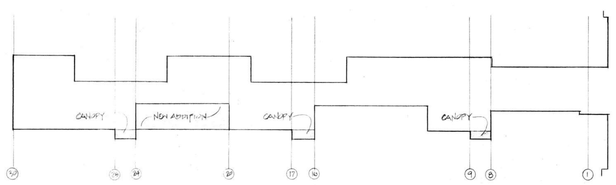

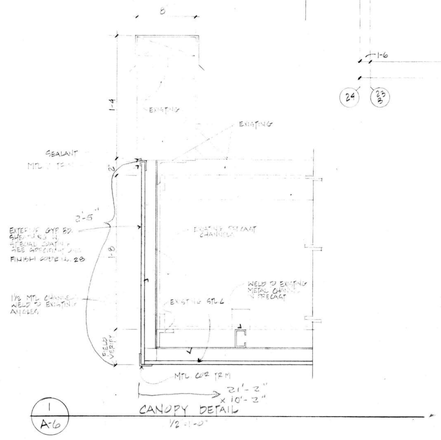

1 SOME PLAN KEYS REQ'D; OTHER CONC. SEE K-3 TO K-6

MILLER·MEIER·KENYON·COOPER ARCHITECTS & ENGINEERS, INC.

756 n. milwaukee st. · milwaukee · wisconsin 53202 · 414/271-1200

CONCOURSE B REHABILITATION & GATE ADDITION
MITCHELL INTERNATIONAL AIRPORT

drawing description	drawn by
NORTH ELEVATION ROOF PLAN LOWER LEVEL PROJECTED CEILING PLAN CANOPY DETAIL	D.V.
date 1-12-88	job number 8717
revisions 3-4-88	sheet number A-6

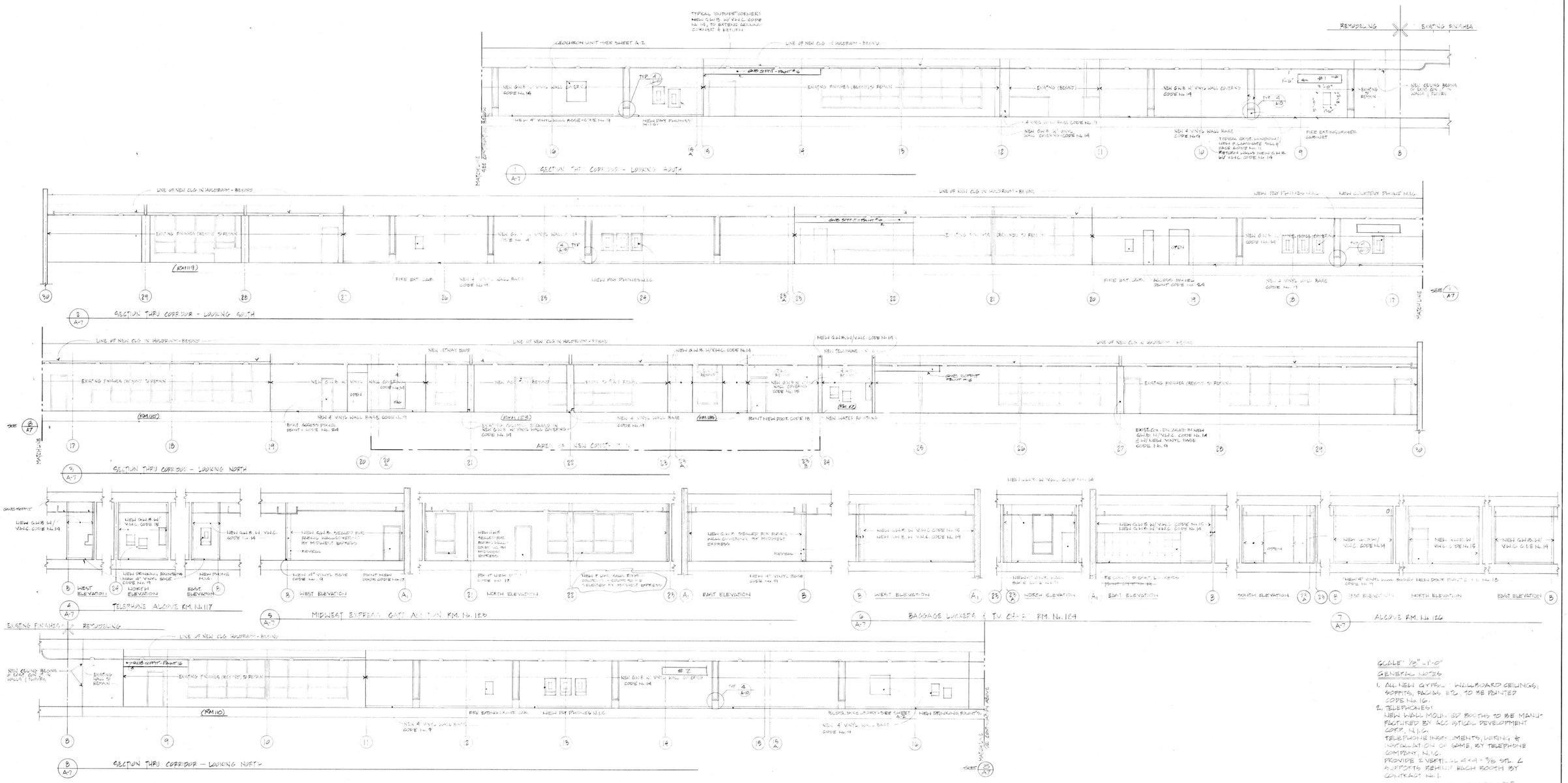

SCALE: 1/8" = 1'-0"

GENERAL NOTES

1. ALL NEW GYPSUM WALLBOARD CEILINGS, SOFFITS, FACIAS ETC. TO BE PAINTED CODE No. 16.
2. TELEPHONES:
   NEW WALL MOUNTED BOOTHS TO BE MANUFACTURED BY ACC VISUAL DEVELOPMENT CORP., N.J.C.
   TELEPHONE INSTRUMENTS, WIRING & INSTALLATION OF SAME, BY TELEPHONE COMPANY, N.I.C.
   PROVIDE 2 VERTICAL 4"x4"x 3/16 STL. L SUPPORTS BEHIND EACH BOOTH BY CONTRACT No. 1.
   ADD STL. L SUPPORTS FOR 1 ADDITIONAL COURTESY PHONE @ OWNER'S DIRECTION.

MILLER · MEIER · KENYON · COOPER
ARCHITECTS & ENGINEERS, INC.

756 n. milwaukee st. · milwaukee · wisconsin 53202 · 414/271-1200

CONCOURSE TO REMODELING & GATE EXPANSION
MITCHELL INTERNATIONAL AIRPORT

drawing description	drawn by
INTERIOR ELEVATIONS	D.V.
date	**job number**
12-03-87	8737
revisions	**sheet number**

A-7

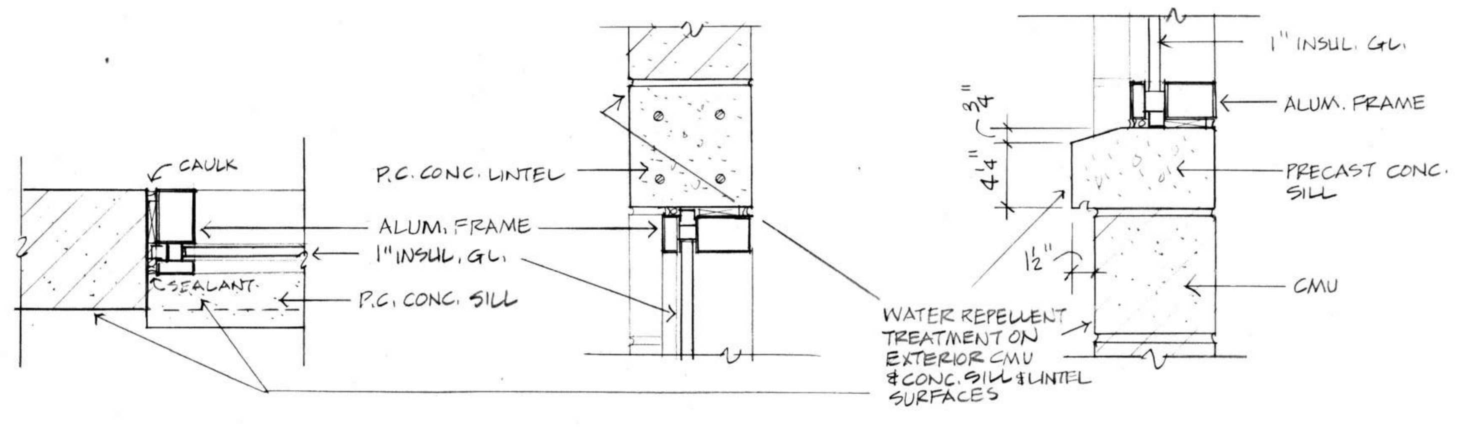

12/A-8 WINDOW JAMB 1½"=1'-0"

13/A-8 WINDOW HEAD 1½"=1'-0"

14/A-8 WINDOW SILL 1½"=1'-0"

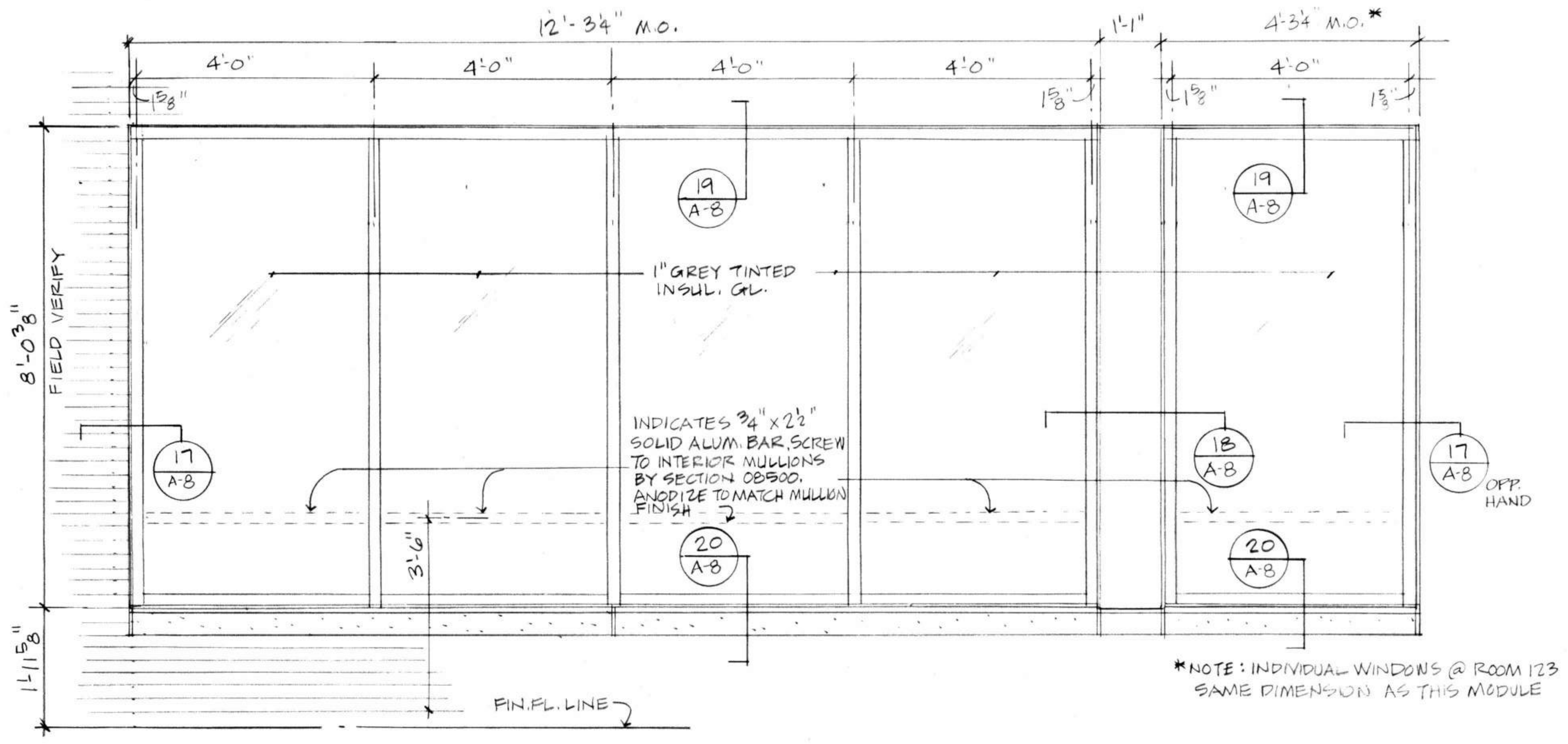

15/A-8 WINDOW ELEVATION ½"=1'-0"

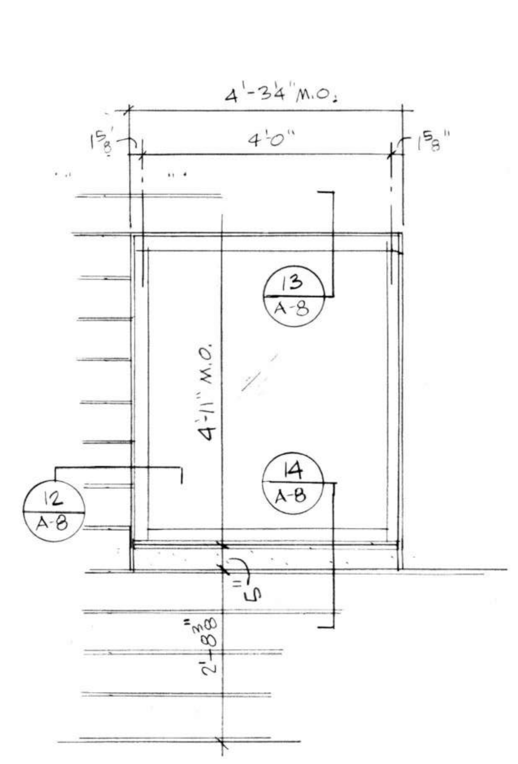

16/A-8 WINDOW ELEVATION ½"=1'-0"

FINISH SCHEDULE

CODE	MATERIAL	MANUFACTURER	SIZE	PATTERN / COLOR / FINISH
1	CARPET, PRIMARY COLOR	BIGELOW	–	PAT: "REGENTS ROW" - SPECIAL COLOR #55665 (DUSTY ROSE) GRADE CODE #SC-1246
2	CARPET, ACCENT COLOR (BORDERS & STRIPES)	BIGELOW	–	PAT: "REGENTS ROW" - STANDARD COLOR "PEWTER" (GRAY) #55486
3	CERAMIC FLOOR TILE, PRIMARY COLOR	FIANDRE	8" x 8" x 5/16" NOMINAL	UNGLAZED - "ADAMELLO" (DUSTY ROSE) #G-680
4	CERAMIC TILE, BORDER COLOR	FIANDRE	8" x 8" x 5/16" NOMINAL	UNGLAZED - "CARIBE" (GRAY) #G-420
5	RUBBER TREADS	R.C. MUSSON CO.	5/16" TAPERING TO 3/16" x FULL WIDTH & DEPTH OF STAIR	PATTERN: #500 - "GRAY MARBELIZED," #11
6	RUBBER RISERS	R.C. MUSSON CO.	1/8" x FULL HEIGHT & WIDTH OF STAIR	PATTERN: #505 CR, "GRAY MARBELIZED," #11
7	RUBBER LANDING FLOOR TILE	R.C. MUSSON CO.	24" x 24" x 7/32" TO FULL EXTENT OF LANDINGS	PATTERN: #550 SL, "GRAY MARBELIZED", #11
8	RUBBER STRINGERS	R.C. MUSSON CO.	1/8" x HEIGHT AS REQ'D (SEE SPECIFICATIONS)	PATTERN: #500 R, "GRAY MARBELIZED," #11
9	VINYL BASE	KENTILE FLOORS, INC.	4" x 1/8" STRAIGHT AT CAPET, COVED AT CER. TILE	"CHARCOAL" #KC-214
10	VINYL BASE	KENTILE FLOORS, INC.	4" x 1/8" COVED	"ARGENT GRAY," #KC-29
11	PLASTIC LAMINATE	FORMICA	–	COLORCORE - "CORDOVAN", #875 - C MATTE FIN
12	ACOUSTIC TILE	ARMSTRONG WORLD IND., INC.	24" x 48" x ¾" W/ FOUR 6" x 48" PANELS - FIRE RATED	"SECOND LOOK III" TEGULAR (REVEAL) EDGE, FIRE GUARD "CORTEGA" SURFACE PATTERN - COLOR: WHITE
	ALTERNATE	UNITED STATES GYPSUM CO.	24" x 48" x ¾" W/ FOUR 6" x 48" PANELS - FIRE RATED	"ILLUSION SERIES" TEGULAR (REVEAL) EDGE, FIRECODE SURFACE PATTERN: "OMNI FISSURED," COLOR: WHITE
13	ACOUSTIC TILE GRID	CHICAGO METALLIC CORP.	STANDARD 15/16" WIDE TEE - FIRE RATED	NON-RATED SUSPENSION SYSTEM, SNAP GRID - FIRE FRONT #250 LOW GLOSS TEXTURED COLOR: "LOW GLOSS WHITE #02"
14	VINYL WALL COVERING, PRIMARY COLOR	GENERAL TIRE & RUBBER CO.	54" WIDTH	GENON - PATTERN "DIAMOND WEAVE," COLOR "WINDRIFT" #2-58-25, (LIGHT GRAY)
15	VINYL WALL COVERING, ACCENT COLOR	GENERAL TIRE & RUBBER CO.	54" WIDTH	GENON - PATTERN "DIAMOND WEAVE," COLOR "RED CLAY", #2-58-H6, (BURGUNDY)
16	PAINT	PRATT & LAMBERT, PITTSBURGH PAINT, OR EQUAL	–	"PURE WHITE", INT-3, ALKYD FLAT
DOORS @ NEW AREA 17	PAINT	PRATT & LAMBERT, PITTSBURGH PAINT, OR EQUAL.	–	TO MATCH MIDWEST EXPRESS EXISTING HOLDROOM DOORS (GRAY), INT-4 ALKYD SATIN ENAMEL
DOOR @ STORAGE 18	PAINT	PITTSBURGH PAINT	–	"BRANDIED CRIMSON," #7161, INT-4 ALKYD SATIN ENAMEL
~~19~~	~~PAINT~~	~~PITTSBURGH PAINT~~	–	~~"BRANDIED CRIMSON," #7161, INT-5 ENAMEL SPRAY-ON~~
20	PAINT	PITTSBURGH PAINT	–	"MULLED WINE" #7167 - INT-2 ALKYD SATIN ENAMEL
STAIR 21	PAINT	PITTSBURGH PAINT	–	"MULLED WINE" #7167 INT-4 ALKYD SATIN ENAMEL
@ STORAGE RM 22	PAINT	PITTSBURGH PAINT	–	"STONE MOUNTAIN" #2544 (GRAY) INT-1 ALKYD SATIN ENAMEL
STAIR 23	PAINT	PITTSBURGH PAINT	–	"STONE MOUNTAIN" #2544 (GRAY) INT-2 ALKYD SATIN ENAMEL
ACCESS PANEL 24	PAINT	PITTSBURGH PAINT	–	"STONE MOUNTAIN" #2544 (GRAY) INT-4 ALKYD SATIN ENAMEL
@ AREA CO REVEAL 25	PAINT	PITTSBURGH PAINT	–	"SHARKS TOOTH" #7750 (CHARCOAL), INT-4 ALKYD SATIN ENAMEL
26	PAINT	GLIDDEN	–	#4656 (DARK BROWN), EXT-1, ALKYD GLOSS ENAMEL
27	PAINT	GLIDDEN	–	#4656 (DARK BROWN), EXT-2, ALKYD GLOSS ENAMEL
@ EYEBROW 28	SPECIAL COATING	STO INDUSTRIES	–	"STOLIT-K 1.5" SERIES, SPECIAL LIGHT GRAY TO BE SELECTED

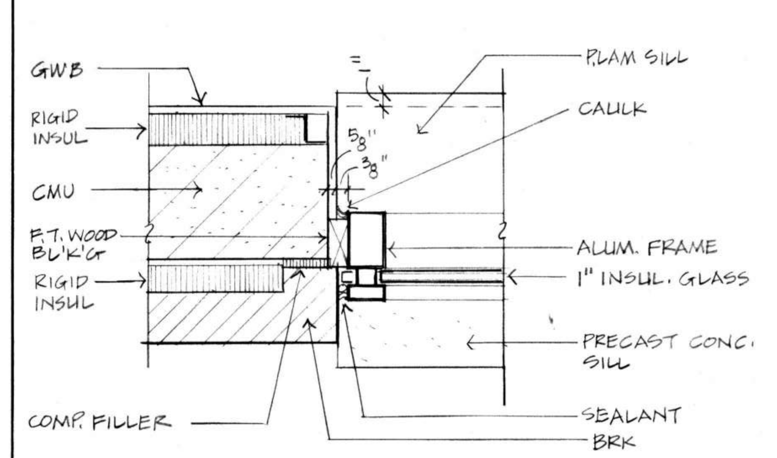

17/A-8 WINDOW JAMB ROOM 123 1½"=1'-0"

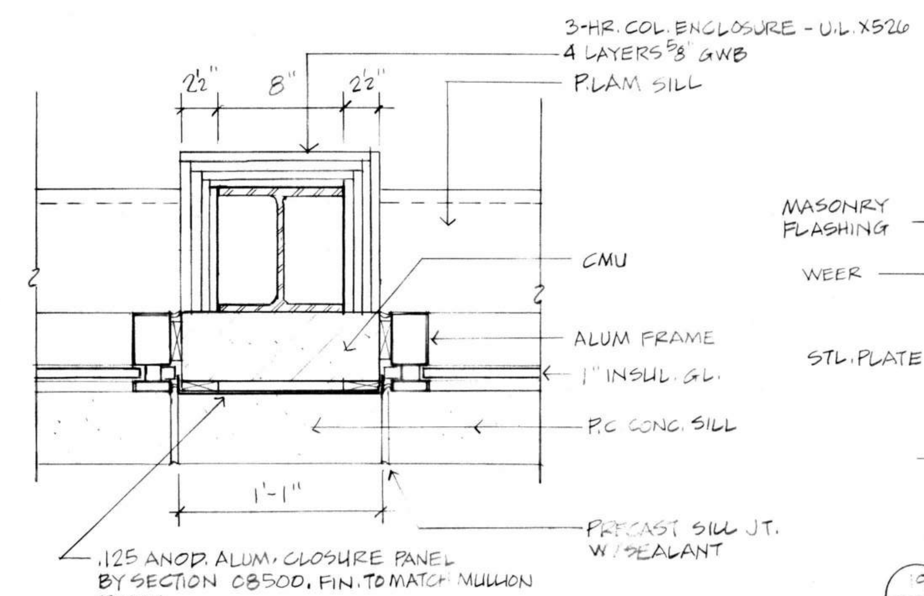

18/A-8 WINDOW JAMBS @ COL. ROOM 123 1½"=1'-0"

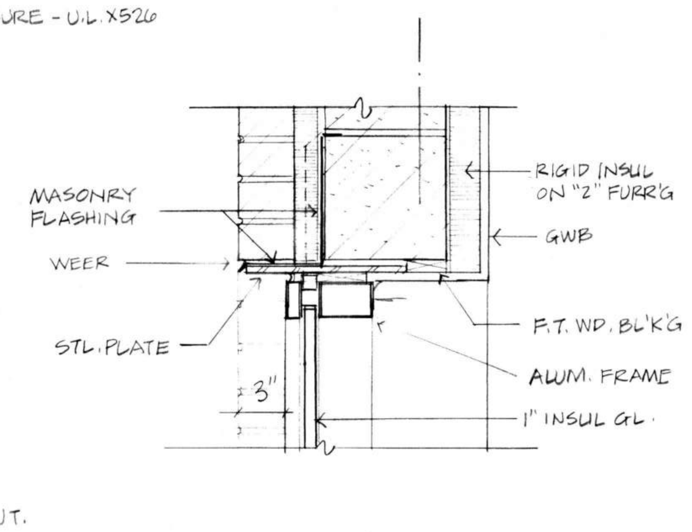

19/A-8 WINDOW HEAD ROOM 123 1½"=1'-0"

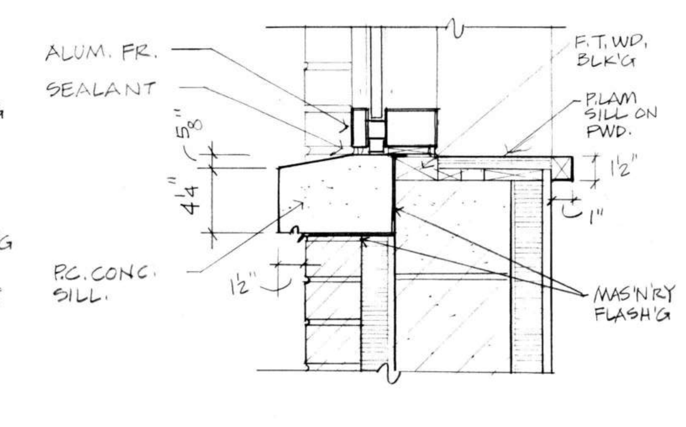

20/A-8 WINDOW SILL ROOM 123 1½"=1'-0"

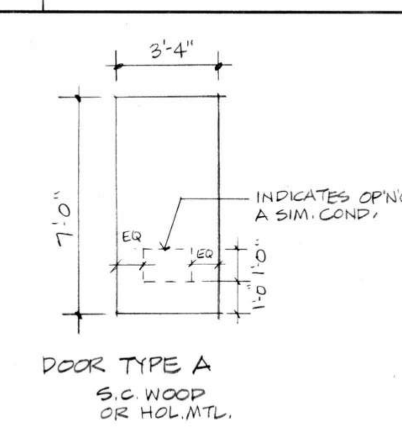

DOOR TYPE A
S.C. WOOD OR HOL. MTL.

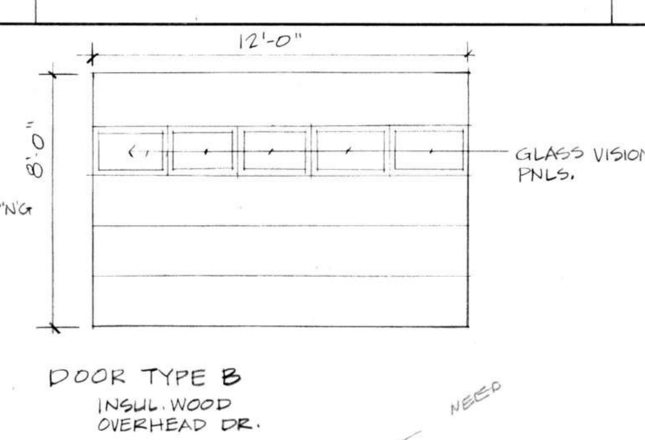

DOOR TYPE B
INSUL. WOOD OVERHEAD DR.

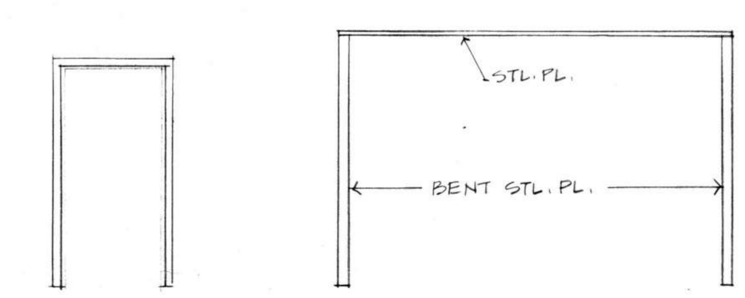

FRAME TYPE A
HOL. MTL. OR ALUM.

FRAME TYPE B
STEEL

DOOR FINISH SCHEDULE

		1	2	3	4	5	6	7	8
OPENING NUMBER		1	2	3	4	5	6	7	8
FROM ROOM NO.		12	11	11	127	127	123	123	126
TO ROOM NO.		EXTERIOR	EXTERIOR	127	EXTERIOR	17	127	EXTERIOR	125
LINTEL TYPE		STL. PL.	P.C. CONC	P.C. CONC	P.C. CONC.	P.C. CONC	P.C. CONC.	P.C. CONC.	–
DOOR	TYPE & CONST.	B INSUL. WD. O.H. DR.	A S.C. WD.*	A S.C. WD	A S.C. WD.*	A S.C. WD.	A S.C. WD.	A H.M. INSUL.	A S.C. WD. SIM. *
	NOM. SIZE	12080	3470	3470	3470	3470	3470	3470	3470
	CODE	26 26	17 26	17 17	17 26	17 17	17 17	17 27	18 18
	U.L. LABEL	–	–	B	B NONE/MMKC	B	B	–	–
FRAME	TYPE	B	A	A	A	A	A	A	A
	MATERIAL	STL. PL.	ALUM.	H.M.	ALUM	H.M.	H.M.	ALUM.	H.M.
	CODE	26 26	– –	17 17	– –	17 17	17 17	– –	18 18
	DETAIL HEAD	1/A-8	3/A-8	3/A-8	3/A-8	3/A-8	6/A-8	8/A-8	11/A-8
	DETAIL JAMB	2/A-8	4/A-8	4/A-8 SIM	4/A-8 SIM	4/A-8	7/A-8	9/A-8	11/A-8
	DETAIL SILL	–	5/A-8	–	–	5/A-8	–	10/A-8	–
	U.L. LABEL	–	–	B	B	B	B	–	–
HARDWARE GROUP NO.		*	4 *** NO	5	4 *** NO	5	3 SIPHER LOCK ***	1	2
		* HDWE & CONTROLS BY SECTION 08360	* EXTERIOR GRADE		* EXTERIOR GRADE				* PROVIDE OP'NG FOR 12"x18" XFER GRILL

*** NOTE: PROVIDE CIPHER LOCK ON INTERIOR SIDE OF DOOR INTERCONNECTED TO ELECTRIC STRIKE; CIPHER LOCK SHALL BE BY SECURITIES ENGINEERING FORESTVILLE, CT. TO MATCH EXISTING TERMINAL CIPHER LOCKS.

KEY TO DOOR CODES

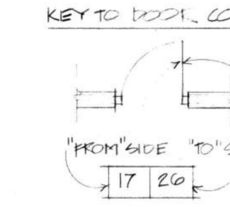

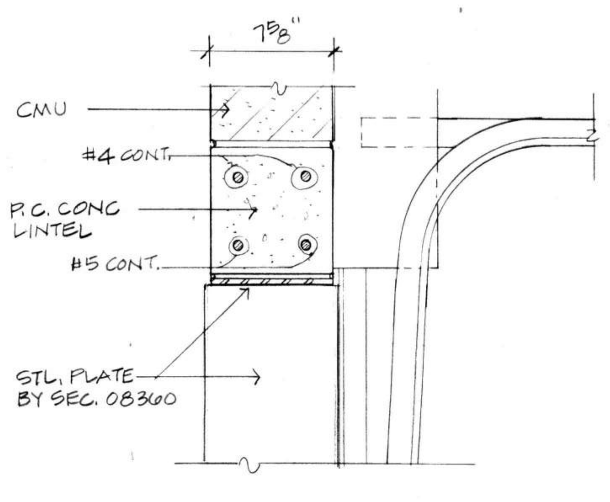

1/A-8 OVERHEAD DOOR HEAD DOOR 1 1½"=1'-0"

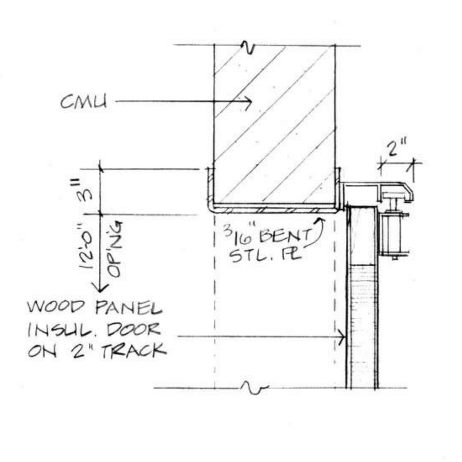

2/A-8 OVERHEAD DOOR JAMB DOOR 1 1½"=1'-0"

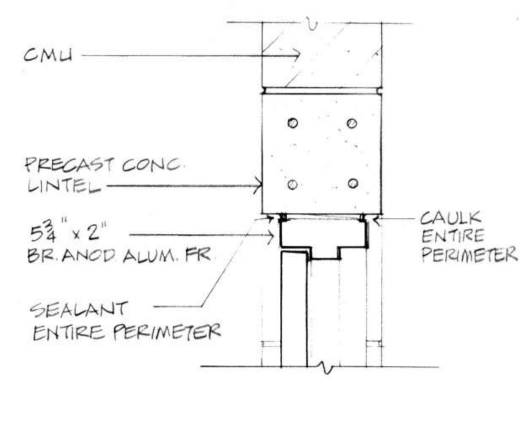

3/A-8 DOOR HEAD DRS. 2,3,4,5 1½"=1'-0"

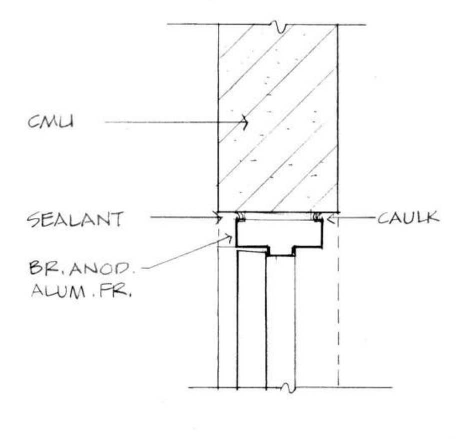

4/A-8 DOOR JAMB DRS. 2,3,4,5 1½"=1'-0"

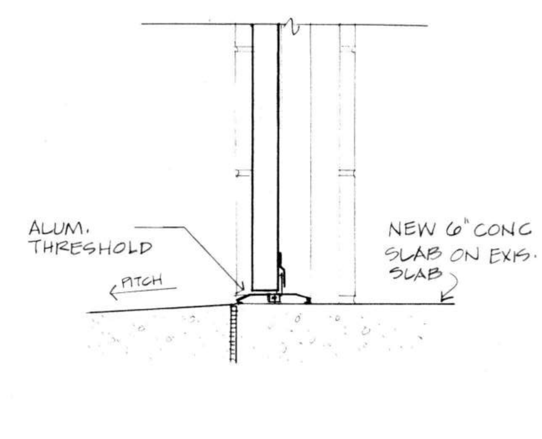

5/A-8 DOOR SILL DRS. 2 & 5 1½"=1'-0"

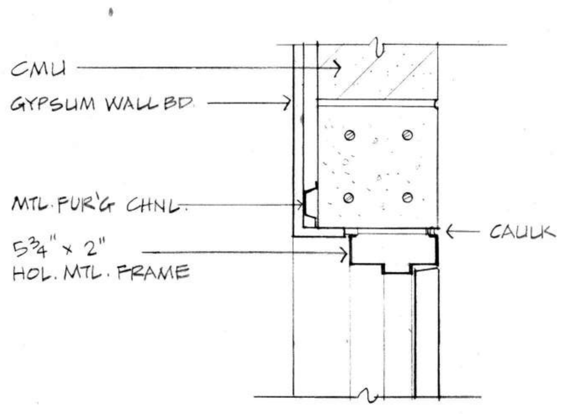

6/A-8 DOOR HEAD DOOR 6 1½"=1'-0"

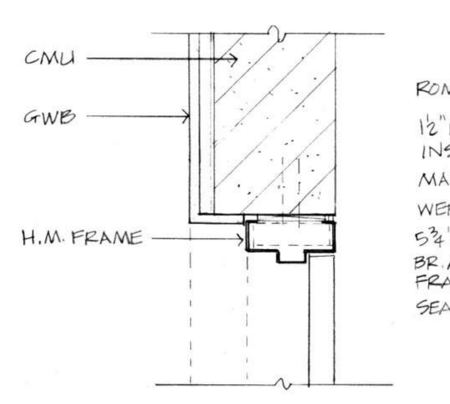

7/A-8 DOOR JAMB DOOR 7 1½"=1'-0"

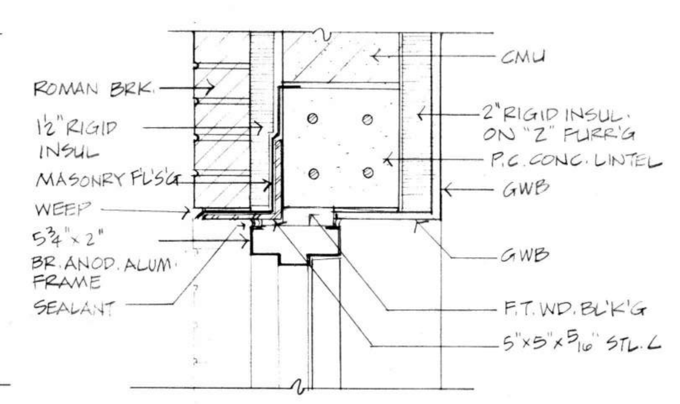

8/A-8 DOOR HEAD DOOR 7 1½"=1'-0"

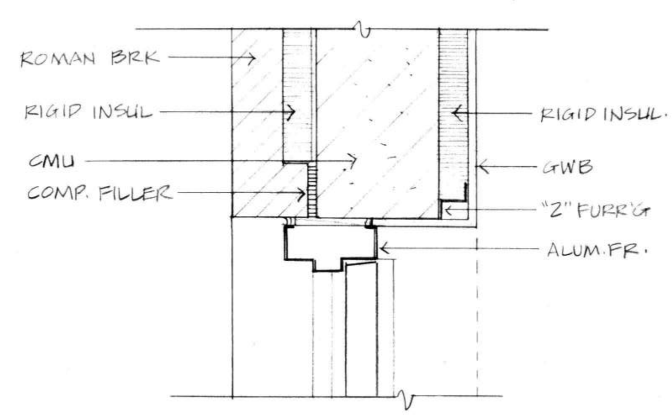

9/A-8 DOOR JAMB DOOR 7 1½"=1'-0"

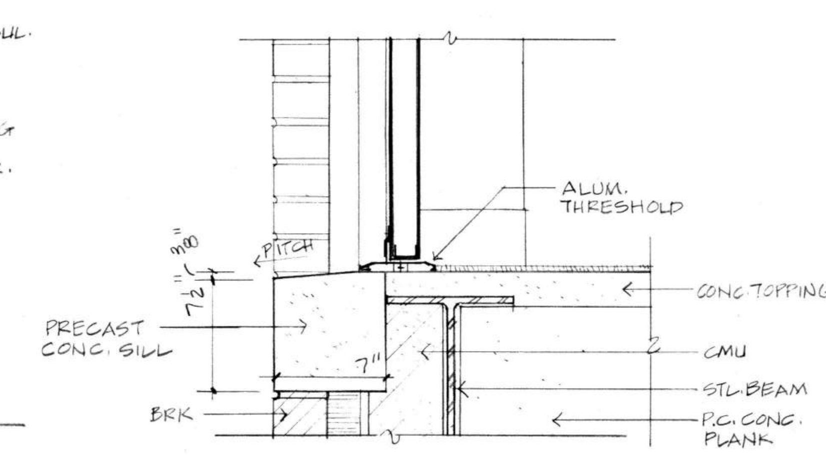

10/A-8 DOOR SILL DOOR 7 1½"=1'-0"

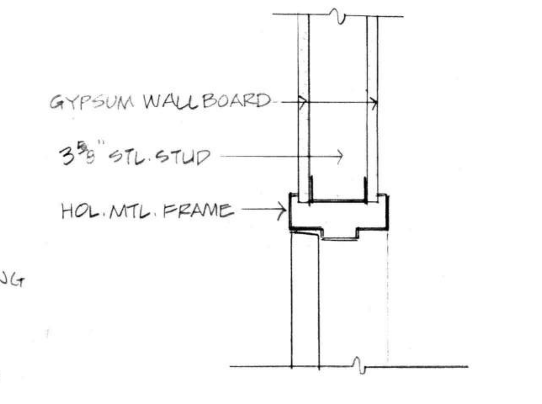

11/A-8 DOOR HEAD (JAMB SIM) DOOR 8 1½"=1'-0"

MILLER · MEIER · KENYON · COOPER · ARCHITECTS & ENGINEERS, INC.

756 n. milwaukee st. · milwaukee · wisconsin 53202 · 414/271·1200

CONCOURSE "D" REMODELING & GATE ADDITION
MITCHELL INTERNATIONAL AIRPORT

drawn by: RDC

drawing description: FINISH SCHEDULE, DOOR SCHEDULE, WINDOW & DOOR DETAILS

date: 1-12-88

job number: 87737

revisions

sheet number: A-8

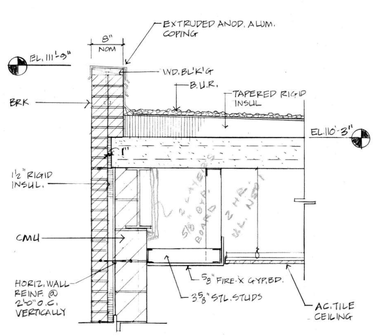

1 A-9 DETAIL COL. LINE A. 3/4"=1'-0"

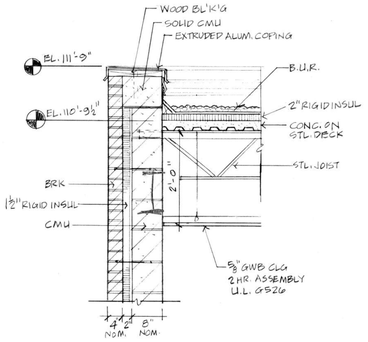

2 A-9 DETAIL @ STAIRTOWER 3/4"=1'-0"

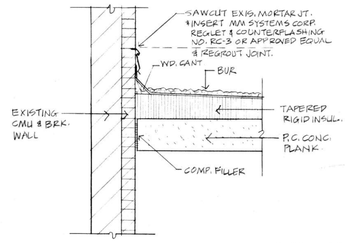

3 A-9 DETAIL @ EXISTING WALL 3/4"=1'-0"

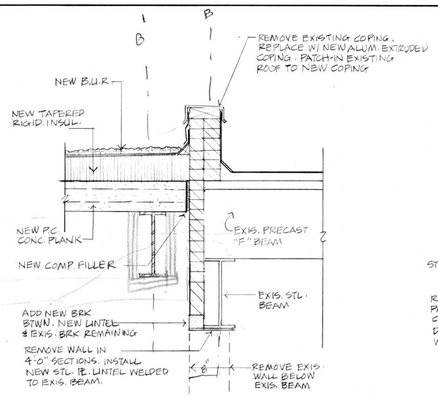

4 A-9 DETAIL @ EXISTING PARAPET 3/4"=1'-0"

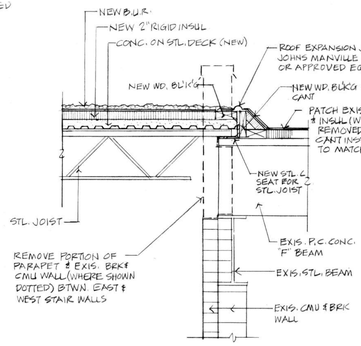

5 A-9 ROOF DETAIL 3/4"=1'-0"

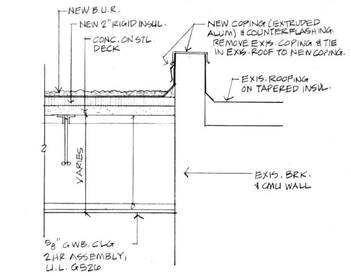

6a A-9 ROOF DETAIL @ STAIRWAY WEST WALL 3/4"=1'-0"

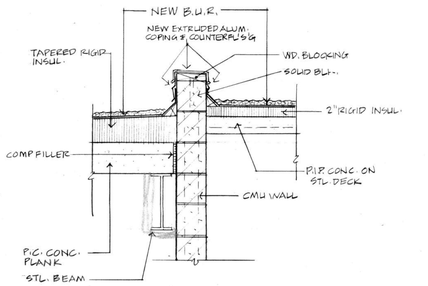

7 A-9 ROOF DETAIL @ STAIRWAY EAST WALL 3/4"=1'-0"

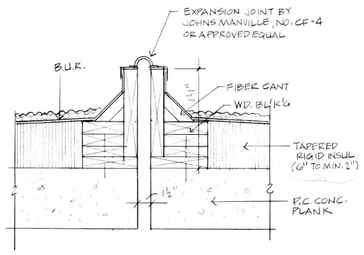

8 A-9 ROOF EXPANSION JT. DETAIL 3/4"=1'-0"

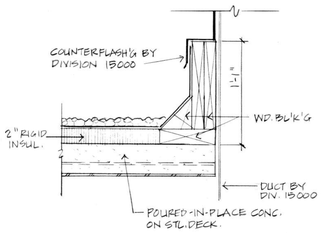

9 A-9 MECH. EQUIPMENT ROOF CURB DTL. 3/4"=1'-0"

NOTE: IN ADDITION TO STL BM SHOWN IN 1/A-9, 4/A-9 & 7/A-9 & NEW STL. ROOF SUPPORT BMS ON COL LINES 23, 23A, 22, & 21 SHALL BE ENCLOSED WITH 2 LAYERS 5/8" GYP BRD. FOR 2 HR. U.L. N501

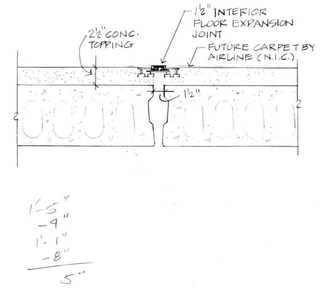

10 A-9 FLOOR EXPANSION JOINT DETAIL ½"=1'-0"

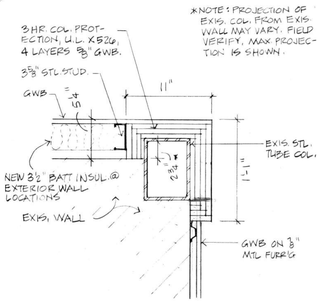

* NOTE: PROJECTION OF EXIS. COL. FROM EXIS. WALL MAY VARY. FIELD VERIFY. MAX. PROJECTION IS SHOWN.

11 A-9 TYP. WALL CORNER DETAIL ½"=1'-0"

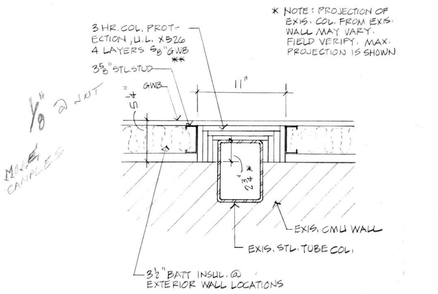

* NOTE: PROJECTION OF EXIS. COL. FROM EXIS. WALL MAY VARY. FIELD VERIFY. MAX. PROJECTION IS SHOWN.

** NOTE: 3 HR. COL. PROTECTION SHOWN TO BE ADDED TO ALL EXIS. EXPOSED STL TUBE COLS. IN CORRIDOR 101

12 A-9 TYP. NEW CORRIDOR WALL 1½"=1'-0" CORRIDOR 101

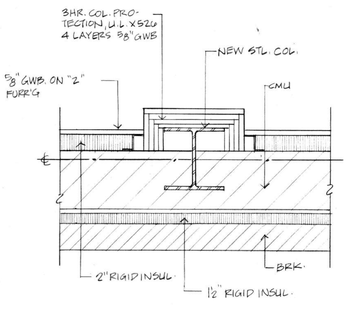

13 A-9 WALL DETAIL @ COL. 1½"=1'-0" ROOM 123

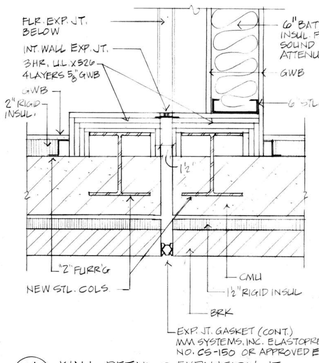

14 A-9 WALL DETAIL @ EXPANSION JT. 1½"=1'-0" ROOM 124

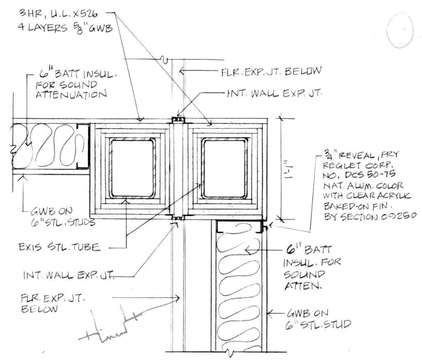

15 A-9 WALL DTL. @ EXPAN. JT. 1½"=1'-0" ROOM 124 CORR. 101

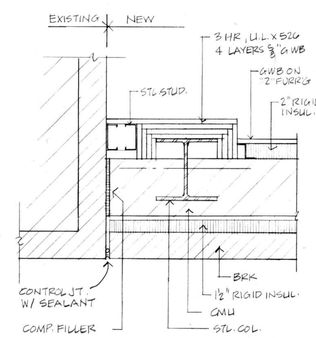

16 A-9 WALL DTL. 1½"=1'-0" ROOM 124 ROOM 127 (SIM. OPPHAND)

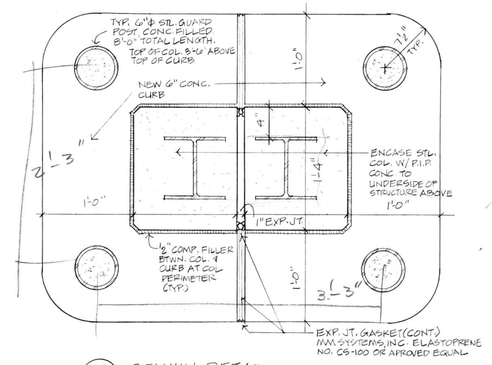

17 A-9 COLUMN DETAIL 1½"=1'-0"

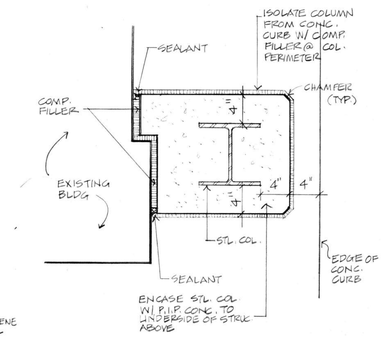

18 A-9 COLUMN DETAIL 1½"=1'-0"

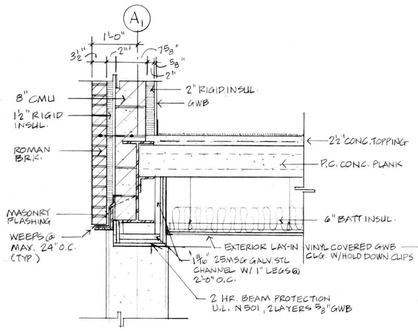

19 A-9 WALL DETAIL 3/4"=1'-0"

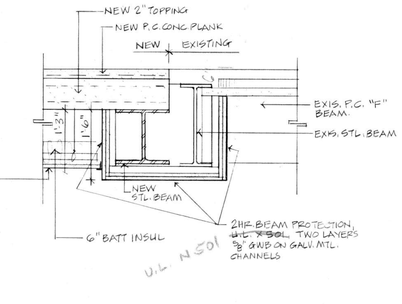

20 A-9 BEAM DETAIL 3/4"=1'-0"

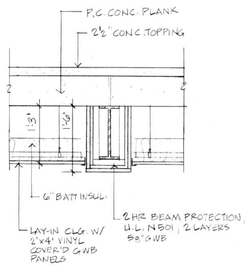

GENERAL NOTE:
IN ADDITION TO DETAILS 19 & 20, THIS SHEET, ALL NEW FLOOR FRAMING BEAMS BTWN. COL. LINES A, & B ON COL. LINES 21, 22, 23 & 23A MUST BE 2 HR. PROTECTED FOLLOWING THE STANDARDS OF ~~U.L. X501~~ U.L. N501

21 A-9 DETAIL 3/4"=1'-0"

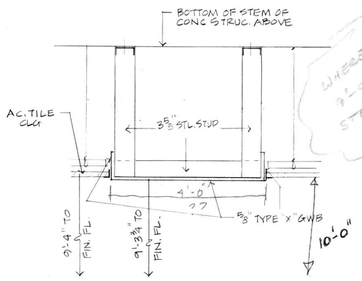

WHERE IS 9'-9" STEP?

22 A-9 DROPPED SOFFIT DETAIL 1"=1'-0"

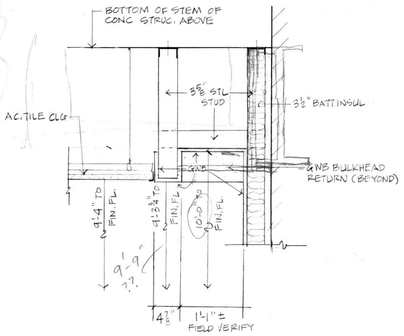

23 A-9 SOFFIT DETAIL 1"=1'-0"

MILLER·MEIER·KENION·COPPER ARCHITECTS & ENGINEERS INC
756 n milwaukee st · milwaukee · wisconsin 53202 · 414/271-1200

CONCOURSE REMODELING & GATE ADDITION
MITCHELL INTERNATIONAL AIRPORT

drawing description: DETAILS — drawn by: RDG
date: 1-12-88 — job number: 8722
revisions — sheet number: A-9

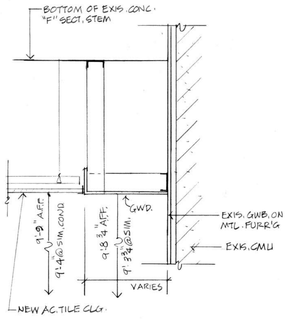

1 A-10 TYP. SOFFIT DETAIL @ EXIST. WALLS
1"=1'-0"

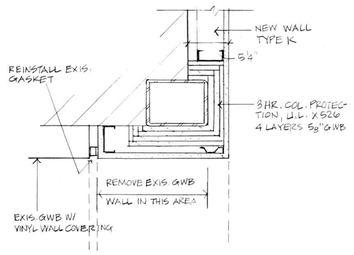

2 A-10 CORNER DETAIL
1½"=1'-0"

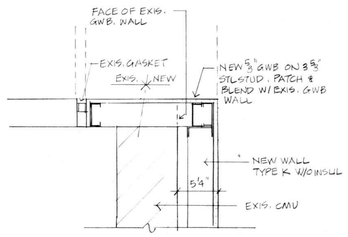

3 A-10 CORNER DETAIL
1½"=1'-0"

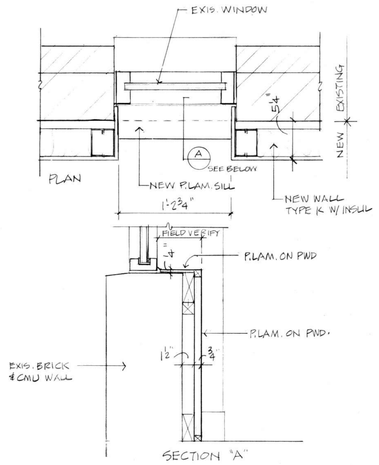

4 A-10 TYP. SILL DTL. @ CORRIDOR 101 WINDOWS
1½"=1'-0"

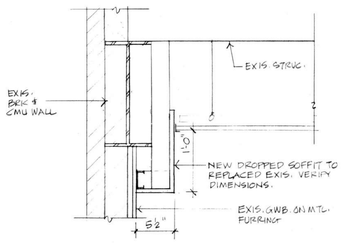

5 A-10 SOFFIT DETAIL
1"=1'-0"

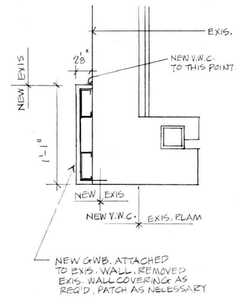

6 A-10 WALL DETAIL
1½"=1'-0"

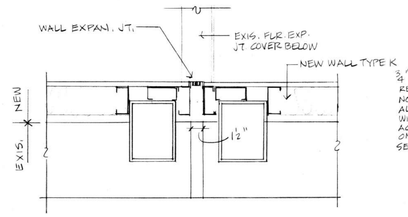

9 A-10 WALL EXPANSION JT. - INTERIOR
1½"=1'-0"

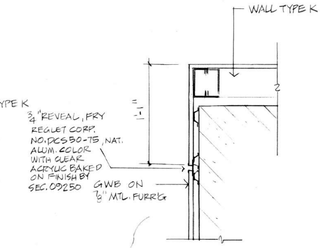

8 A-10 WALL DETAIL
1½"=1'-0"

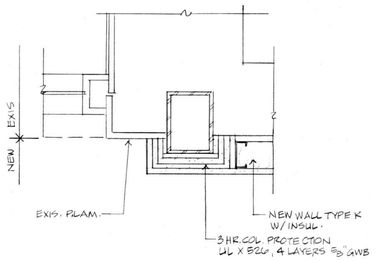

7 A-10 WALL DETAIL
1½"=1'-0"

MILLER · MEIER · KENYON · COOPER · ARCHITECTS & ENGINEERS, INC.

756 n. milwaukee st. · milwaukee · wisconsin 53202 · 414/271-1200

CONCOURSE 'D' REMODELING & GATE ADDITION
MITCHELL INTERNATIONAL AIRPORT

drawing description — drawn by: RDC

date: 1-12-83 — job number: 37737

revisions — sheet number: A-10