Department of Parks, Recreation and Culture

O'Donnell Park: Parking Structure Facade Improvements

910 East Michigan Street, Milwaukee, Wisconsin 53202-5607

Site No: 784
Building No: 75
Date: 01/14/2011
Project No: W0114-11415

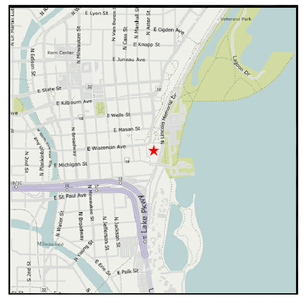

LOCATION MAP

MILWAUKEE COUNTY DEPARTMENT OF
TRANSPORTATION & PUBLIC WORKS

CITY CAMPUS 2711 W. WELLS ST - 2ND FLOOR MILWAUKEE, WI 53208

DRAWINGS

GENERAL

G-000	COVER SHEET
G-001	GENERAL NOTES

CIVIL

C-101 VEHICULAR TRAFFIC SCHEMATIC
C-102 TRAFFIC CONTROL PLAN OVERVIEW
C-103 TRAFFIC CONTROL PLAN NORTH OF WORKZONE
C-104 TRAFFIC CONTROL PLAN LINCOLN AND EAST GARAGE
C-105 TRAFFIC CONTROL PLAN LINCOLN AND MICHIGAN INTERSECTION
C-106 PEDESTRIAN TRAFFIC CONTROL PLAN OVERVIEW
C-107 OAK LEAF TRAIL DETOUR PLAN

ARCHITECTURAL

A101	LINCOLN MEMORIAL DRIVE LEVEL PLAN - SECTOR 1
A102	LINCOLN MEMORIAL DRIVE LEVEL PLAN - SECTOR 2
A103	LINCOLN MEMORIAL DRIVE LEVEL PLAN - SECTOR 3
A111	MICHIGAN STREET LEVEL PLAN - SECTOR 1
A112	MICHIGAN STREET LEVEL PLAN - SECTOR 2
A113	MICHIGAN STREET LEVEL PLAN - SECTOR 3
A121	WISCONSIN AVENUE LEVEL PLAN - SECTOR 1
A122	WISCONSIN AVENUE LEVEL PLAN - SECTOR 2
A123	WISCONSIN AVENUE LEVEL PLAN - SECTOR 3
A131	UPPER PLAZA LEVEL PLAN - SECTOR 1
A200	EXTERIOR ELEVATIONS
A200-Alt	ADD ALTERNATE EXTERIOR ELEVATIONS
A201	EXTERIOR ELEVATIONS
A201-Alt	ADD ALTERNATE EXTERIOR ELEVATIONS
A202	EXTERIOR ELEVATIONS
A202-Alt	ADD ALTERNATE EXTERIOR ELEVATIONS
A203	EXTERIOR ELEVATIONS
A203-Alt	ADD ALTERNATE EXTERIOR ELEVATIONS
A300	WALL SECTIONS
A300-Alt	ADD ALTERNATE WALL SECTIONS
A301	WALL SECTIONS
A301-Alt	ADD ALTERNATE WALL SECTIONS
A302	WALL SECTIONS
A302-Alt	ADD ALTERNATE WALL SECTIONS
A303	WALL SECTIONS
A303-Alt	ADD ALTERNATE WALL SECTIONS
A304	WALL SECTIONS
A304-Alt	ADD ALTERNATE WALL SECTIONS
A401	DETAILS
A401-Alt	ADD ALTERNATE DETAILS
A402	DETAILS
A402-Alt	ADD ALTERNATE DETAILS
A403	DETAILS
A403-Alt	ADD ALTERNATE DETAILS

STRUCTURAL

S101	LINCOLN MEMORIAL DRIVE LEVEL PLAN - SECTOR 1
S102	LINCOLN MEMORIAL DRIVE LEVEL PLAN - SECTOR 2
S103	LINCOLN MEMORIAL DRIVE LEVEL PLAN - SECTOR 3
S111	MICHIGAN STREET LEVEL PLAN - SECTOR 1
S112	MICHIGAN STREET LEVEL PLAN - SECTOR 2
S113	MICHIGAN STREET LEVEL PLAN - SECTOR 3
S121	WISCONSIN AVENUE LEVEL PLAN - SECTOR 1
S122	WISCONSIN AVENUE LEVEL PLAN - SECTOR 2
S123	WISCONSIN AVENUE LEVEL PLAN - SECTOR 3
S131	UPPER PLAZA LEVEL PLAN - SECTOR 1
S401	DETAILS AND SECTIONS
S402	DETAILS AND SECTIONS

ARCHITECTURAL ENGINEERING
Carl Walker, Inc.
PHONE: 630.307.3800; FAX: 630.307.7030
1920 S. Highland Ave., Suite 210
Lombard, IL 60148

CIVIL
K. Singh & Associates, Inc.
PHONE: 262.821.1171; FAX: 262.821.1174
1135 Legion Dr.
Elm Grove, WI 53122

ARCHITECTURAL
Engberg Anderson, Inc.
PHONE: 414.944.9000; FAX: 414.944.9100
320 E. Buffalo St., Suite 500
Milwaukee, WI 53202

ARCHITECTURE
M&E Architects Surveyors, LLC
PHONE: 414.690.1256; FAX: 414.224.7764
205 W. Highland Ave
Milwaukee, WI 53203

PROJECT SIGNATURES

DIRECTOR, PARKS DEPARTMENT: _____

DIRECTOR, D.T.P.W.: _____

MILWAUKEE COUNTY ARCHITECT : _____

PROJECT MANAGER : _____

COVER SHEET

Department of Parks, Recreation and Culture
O'Donnell Park: Parking Structure Facade Improvements
910 East Michigan Street, Milwaukee, Wisconsin 53202-5607

MILWAUKEE COUNTY DEPARTMENT OF TRANSPORTATION AND PUBLIC WORKS
CITY CAMPUS 2711 W. WELLS ST - 2ND FLOOR MILWAUKEE, WI 53208

REVISIONS:
1 00/00/0000

DATE: **02/22/2011**
PROJECT: **W0114-11415**
SITE NO: **784**
BUILDING NO: **75**

G000

Z:\RST\IRS\DPRCTDES\2010\projects\W0114-11415 ODonnell Park\Arch\Drawings\Bid Drawings\G000 Cover Sheet.dwg

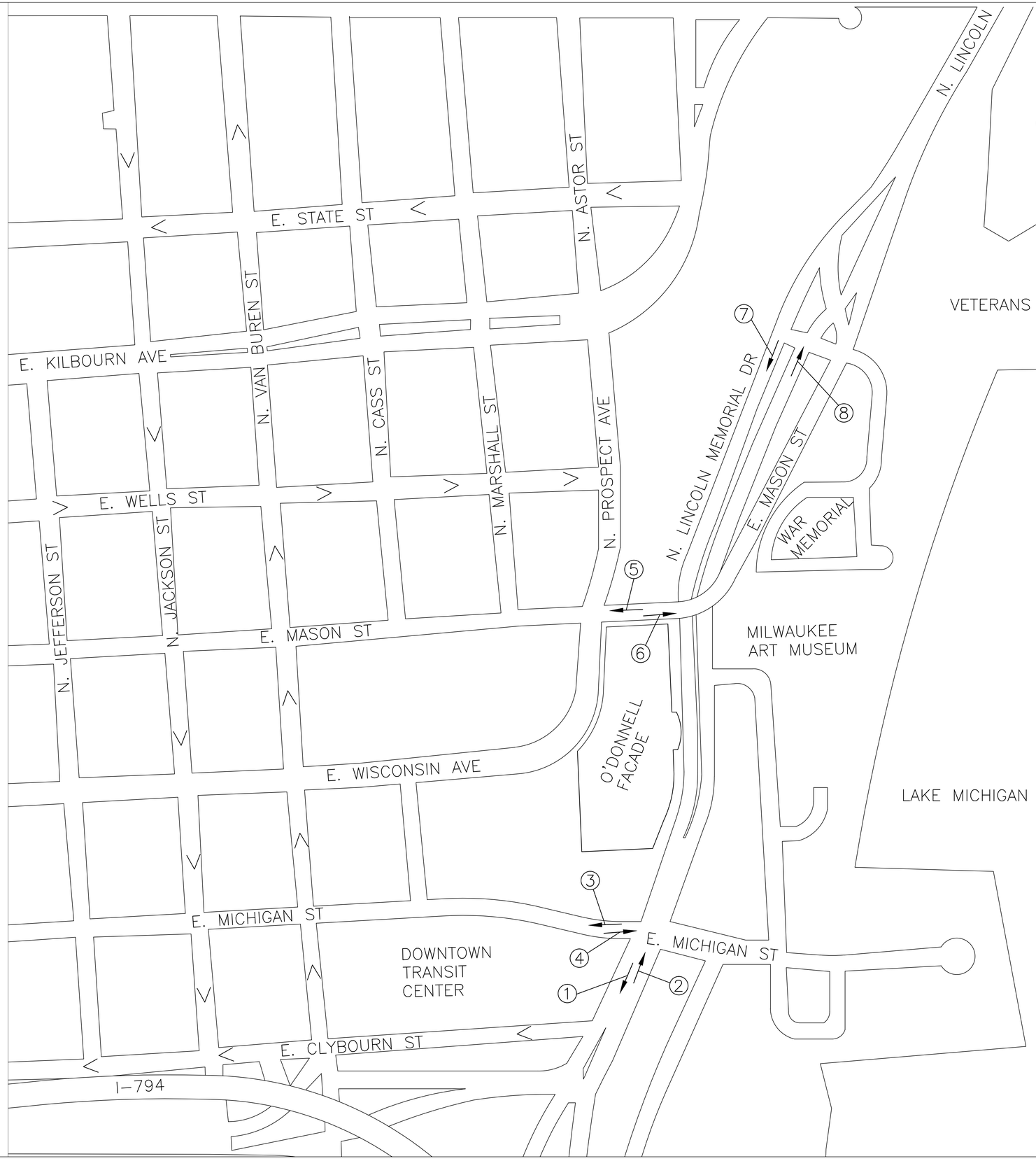

N

NTS

① PEAK HOUR (7:15AM–8:15AM)–1189 VPH
PEAK HOUR (4:15PM–5:15PM)–1812 VPH
ADT–18229 VPD

② PEAK HOUR (7:15AM–8:15AM)–1324 VPH
PEAK HOUR (4:15PM–5:15PM)–1270 VPH
ADT–15247 VPD

③ PEAK HOUR (7:15AM–8:15AM)–547 VPH
PEAK HOUR (4:15PM–5:15PM)–464 VPH
ADT–4554 VPD

④ PEAK HOUR (7:15AM–8:15AM)–508 VPH
PEAK HOUR (4:15PM–5:15PM)–591 VPH
ADT–5932 VPD

⑤ PEAK HOUR (7:45AM–8:45AM)–329 VPH
PEAK HOUR (5:00PM–6:00PM)–166 VPH
ADT–2370 VPD

⑥ PEAK HOUR (7:45AM–8:45AM)–145 VPH
PEAK HOUR (5:00PM–6:00PM)–404 VPH
ADT–3231 VPD

⑦ PEAK HOUR (7:15AM–8:15AM)–1515 VPH
PEAK HOUR (4:45PM–5:45PM)–1225 VPH
ADT–17,165 VPD

⑧ PEAK HOUR (7:15AM–8:15AM)–894 VPH
PEAK HOUR (4:45PM–5:45PM)–1608 VPH
ADT–16,547 VPD

VEHICULAR TRAFFIC SCHEMATIC

P:\8346 O'Donnell Facade Replacement\Site Civil\Cad\Facade Improvements\1_Existing_Vehicular_Traffic_Schematic_Plan.dwg

Department of Parks, Recreation and Culture

O'Donnell Park: Parking Structure Facade Improvements

910 East Michigan Street, Milwaukee, Wisconsin 53202-5607

MILWAUKEE COUNTY DEPARTMENT OF TRANSPORTATION AND PUBLIC WORKS

CITY CAMPUS 2711 W. WELLS ST - 2ND FLOOR MILWAUKEE, WI 53208

REVISIONS:
00/00/0000

DATE:
02/21/2011

PROJECT:
W0114-11415

SITE NO:
784

BUILDING NO:
75

90%

C-101

TRAFFIC CONTROL PLAN OVERVIEW

Department of Parks, Recreation and Culture

O'Donnell Park: Parking Structure Facade Improvements

910 East Michigan Street, Milwaukee, Wisconsin 53202-5607

MILWAUKEE COUNTY DEPARTMENT OF TRANSPORTATION AND PUBLIC WORKS
CITY CAMPUS 2711 W. WELLS ST - 2ND FLOOR MILWAUKEE, WI 53208

REVISIONS:
00/00/0000

DATE:
02/21/2011

PROJECT:
W0114-11415

SITE NO:
784

BUILDING NO:
75

90%

C-102

P:\8346 O'Donnell Facade Replacement\Site Civil\Cad\Facade Improvements\2_Proposed_Vehicular_Traffic_Plan.dwg

**NOTE: PORTABLE CHANGEABLE MESSAGE SIGN TO BE PLACED 2000 FT NORTH OF MASON ST RAMP ON RIGHT SIDE OF SOUTH BOUND N LINCOLN MEMORIAL DR.

SIDEWALK CLOSED

R5-8
24" X 12"

*PLACE SIGN AT TRAIL JUNCTION TO NORTH

250'

250'

ROAD WORK AHEAD

W20-1A

RIGHT LANE CLOSED AHEAD

W20-5A

200'

TAPER
20:1

W04-2

N PROSPECT AVE

N LINCOLN MEMORIAL DR

E MASON ST

LANE CLOSED

R11-2 (MOD)
48" X 30"

TEMPORARY PAVEMENT MARKING
4-INCH REMOVABLE TAPE (WHITE)

N

NTS

LEGEND

- DRUM WITH/WITHOUT WARNING LIGHT, TYPE C
- CHAIN LINK FENCE - 8FT
- TYPE III BARRICADE AND WARNING SIGN, TYPE A WITH SIGN
- TYPE II BARRICADE WITH SIGN
- POST MOUNTED SIGN
- DELINEATOR

TRAFFIC CONTROL PLAN
NORTH OF WORKZONE

P:\8346 O'Donnell Facade Replacement\Site Civil\Cad\Facade Improvements\3_Proposed_Traffic_Control_Lincoln_Mem_and_N_Art_Museum_Walk.dwg

Department of Parks, Recreation and Culture

O'Donnell Park: Parking Structure Facade Improvements

910 East Michigan Street, Milwaukee, Wisconsin 53202-5607

MILWAUKEE COUNTY DEPARTMENT OF TRANSPORTATION AND PUBLIC WORKS

CITY CAMPUS 2711 W. WELLS ST - 2ND FLOOR MILWAUKEE, WI 53208

REVISIONS:
00/00/0000

DATE:
02/21/2011

PROJECT:
W0114-11415

SITE NO:
784

BUILDING NO:
75

90%

C-103

E MASON ST

N PROSPECT AVE

TEMPORARY PAVEMENT MARKING
4–INCH REMOVABLE TAPE (WHITE)

WORK ZONE

ROAD CLOSED
R11–2
48" X 30"

R3–2

CONSTRUCTION VEHICLE ENTRANCE/EXIT

ART MUSEUM DR

R3–2

O'DONNELL PARKING STRUCTURE

TEMPORARY PAVEMENT MARKING
4–INCH REMOVABLE TAPE (YELLOW)

N LINCOLN MEMORIAL DR

LANE CLOSED
R11–2 (MOD)
48" X 30"

TEMPORARY PAVEMENT MARKING
4–INCH REMOVABLE TAPE (WHITE)

LANE CLOSED
R11–2 (MOD)
48" X 30"

N

NTS

LEGEND

- DRUM WITH/WITHOUT WARNING LIGHT, TYPE C
- CHAIN LINK FENCE – 8FT
- TYPE III BARRICADE AND WARNING SIGN, TYPE A WITH SIGN
- POST MOUNTED SIGN
- DELINEATOR

TRAFFIC CONTROL PLAN
LINCOLN AND EAST GARAGE

C-104

Department of Parks, Recreation and Culture

O'Donnell Park: Parking Structure Facade Improvements

910 East Michigan Street, Milwaukee, Wisconsin 53202-5607

MILWAUKEE COUNTY DEPARTMENT OF TRANSPORTATION AND PUBLIC WORKS
CITY CAMPUS 2711 W. WELLS ST - 2ND FLOOR MILWAUKEE, WI 53208

REVISIONS:
00/00/0000

DATE: 02/21/2011
PROJECT: W0114-11415
SITE NO: 784
BUILDING NO: 75

90%

P:\8346 O'Donnell Facade Replacement\Site Civil\Cad\Facade Improvements\4_Proposed_Traffic_Control_Lincoln_Mem_and_E_Garage.dwg

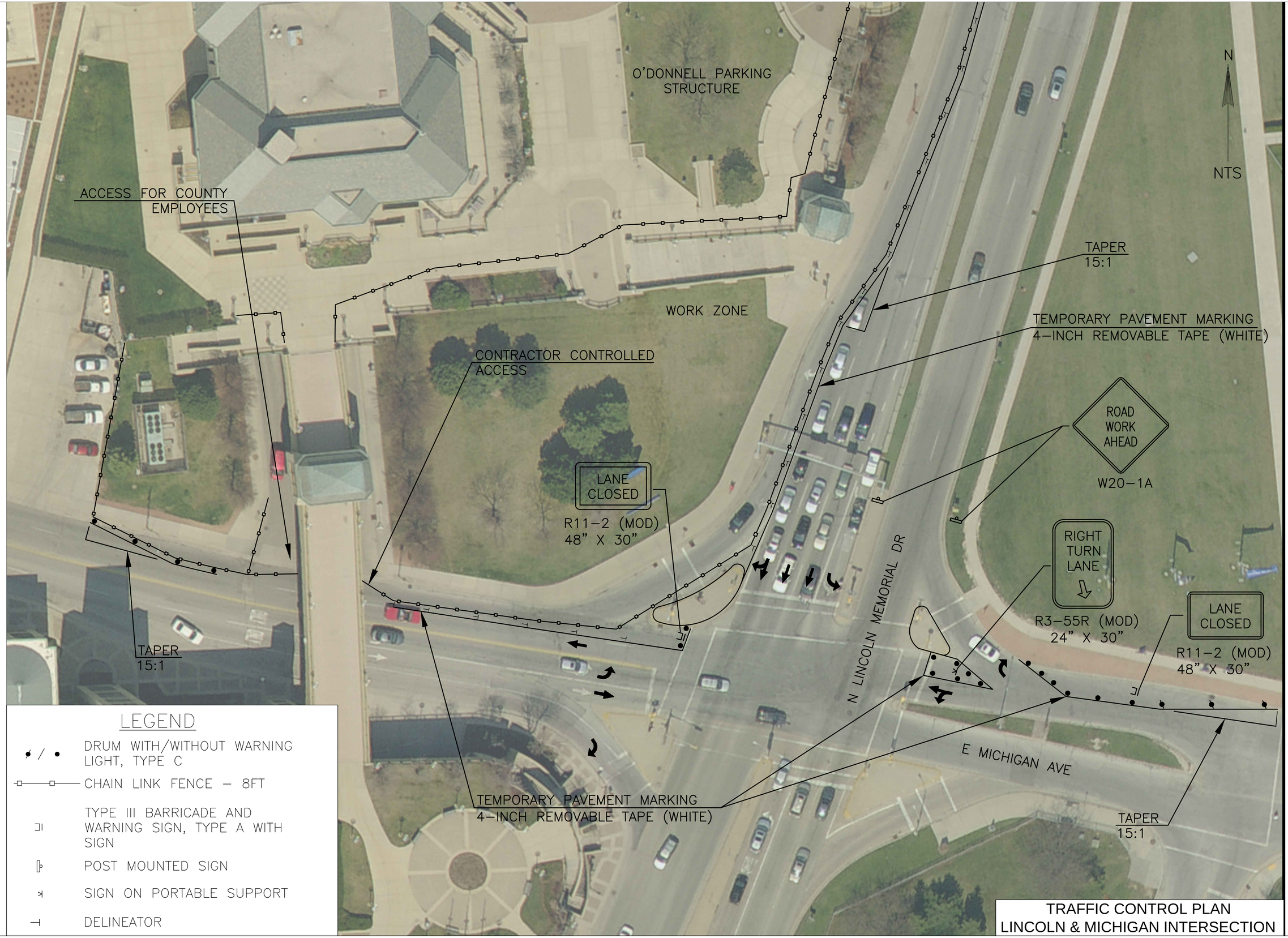

LEGEND

- DRUM WITH/WITHOUT WARNING LIGHT, TYPE C
- CHAIN LINK FENCE – 8FT
- TYPE III BARRICADE AND WARNING SIGN, TYPE A WITH SIGN
- POST MOUNTED SIGN
- SIGN ON PORTABLE SUPPORT
- DELINEATOR

TRAFFIC CONTROL PLAN
LINCOLN & MICHIGAN INTERSECTION

Department of Parks, Recreation and Culture

O'Donnell Park: Parking Structure Facade Improvements

910 East Michigan Street, Milwaukee, Wisconsin 53202-5607

MILWAUKEE COUNTY DEPARTMENT OF TRANSPORTATION AND PUBLIC WORKS

CITY CAMPUS 2711 W. WELLS ST - 2ND FLOOR MILWAUKEE, WI 53208

REVISIONS:
00/00/0000

DATE: **02/21/2011**

PROJECT: **W0114-11415**

SITE NO: **784**

BUILDING NO: **75**

90%

C-105

P:\8346 O'Donnell Facade Replacement\Site Civil\Cad\Facade Improvements\5_Proposed_Traffic_Control_Lincoln_Mem_and_Mich_St.dwg

SIDEWALK CLOSED
R5-8
24" X 12"

SIDEWALK CLOSED
R5-8
24" X 12"

SIDEWALK CLOSED
R5-8
24" X 12"

SIDEWALK CLOSED
R5-8
24" X 12"

SIDEWALK CLOSED
R5-8
24" X 12"

N PROSPECT AVE

E MICHIGAN ST

E MASON ST

O'DONNELL PARKING STRUCTURE

CLOSE STAIRWAY

CLOSE STAIRWAY

CLOSE STAIRWAY

N LINCOLN MEMORIAL DR

ART MUSEUM DR

N

NTS

LEGEND

CHAIN LINK FENCE – 8FT

TYPE II BARRICADE WITH SIGN

PEDESTRIAN TRAFFIC CONTROL PLAN OVERVIEW

C-106

Department of Parks, Recreation and Culture

O'Donnell Park: Parking Structure Facade Improvements

910 East Michigan Street, Milwaukee, Wisconsin 53202-5607

MILWAUKEE COUNTY DEPARTMENT OF TRANSPORTATION AND PUBLIC WORKS
CITY CAMPUS 2711 W. WELLS ST - 2ND FLOOR MILWAUKEE, WI 53208

REVISIONS:
00/00/0000

DATE:
02/21/2011

PROJECT:
W0114-11415

SITE NO:
784

BUILDING NO:
75

90%

P:\8346 O'Donnell Facade Replacement\Site Civil\Cad\Facade Improvements\6_Proposed_Pedestrian_Traffic_Configuration_Plan.dwg

DETOUR
M4–9a

DETOUR
M4–9a

DETOUR
M4–9a

DETOUR
M4–9a

DETOUR
M4–9a

DETOUR
M4–9a

DETOUR
M4–9a

DETOUR
M4–9a

SIDEWALK CLOSED
R5–8
24" X 12"

DETOUR
M4–9a

DETOUR
M4–9a

END DETOUR
M4–8a

END DETOUR
M4–8a

*PLACE SIGNS AT TRAIL JUNCTION TO NORTH

LEGEND

– – – – DETOUR ROUTE

TYPE II BARRICADE WITH SIGN

SIGN ON PORTABLE SUPPORT

N
NTS

OAK LEAF TRAIL DETOUR PLAN

C-107

Department of Parks, Recreation and Culture

O'Donnell Park: Parking Structure Facade Improvements

910 East Michigan Street, Milwaukee, Wisconsin 53202-5607

MILWAUKEE COUNTY DEPARTMENT OF TRANSPORTATION AND PUBLIC WORKS
CITY CAMPUS 2711 W. WELLS ST - 2ND FLOOR MILWAUKEE, WI 53208

REVISIONS:
00/00/0000

DATE:
02/21/2011

PROJECT:
W0114-11415

SITE NO:
784

BUILDING NO:
75

90%

P:\8346 O'Donnell Facade Replacement\Site Civil\Cad\Facade Improvements\7_Proposed_OLT_Detour.dwg

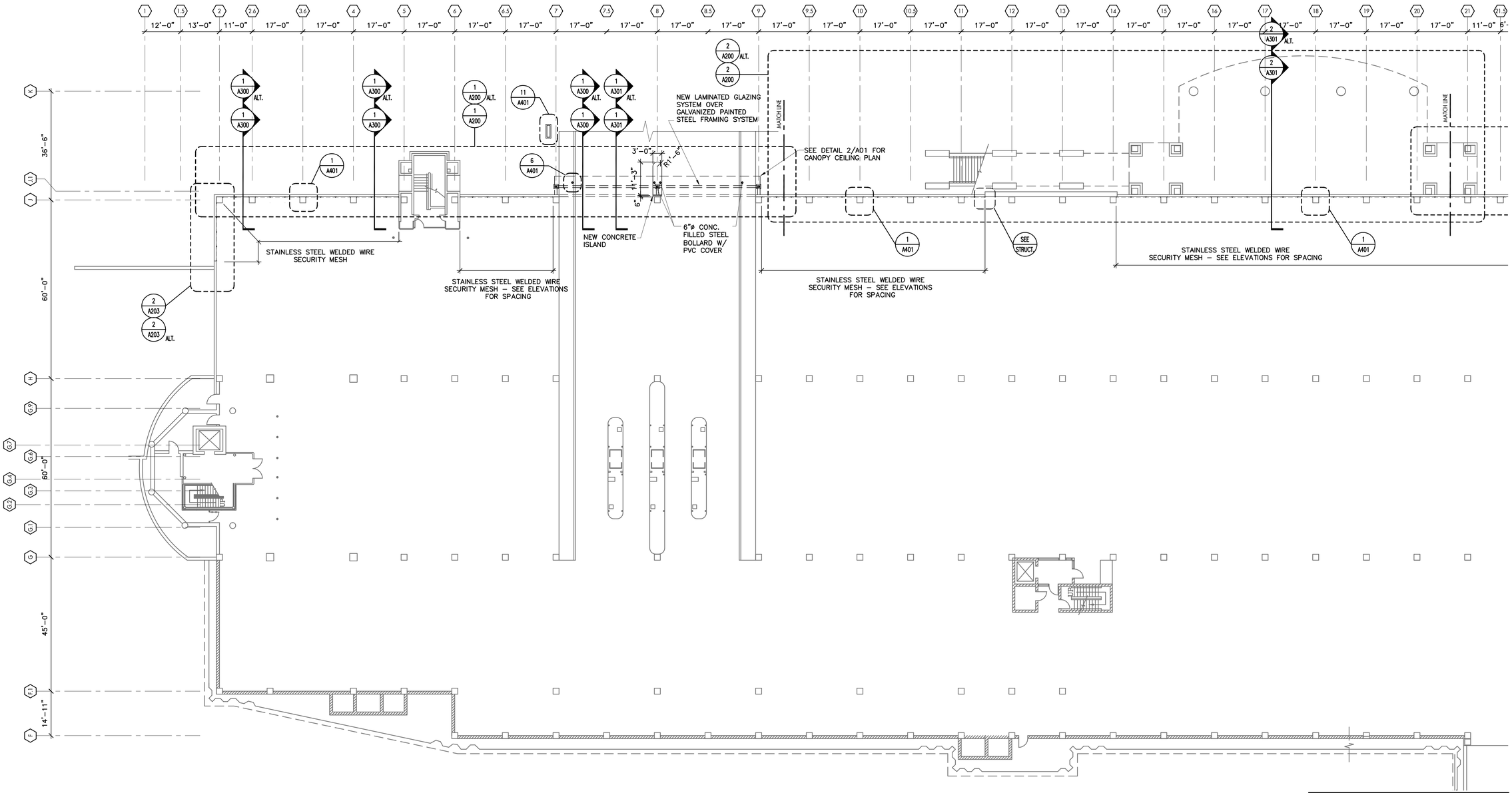

1 A101 LINCOLN MEMORIAL DRIVE LEVEL PLAN – SECTOR 1
SCALE: 1/16"=1'-0"

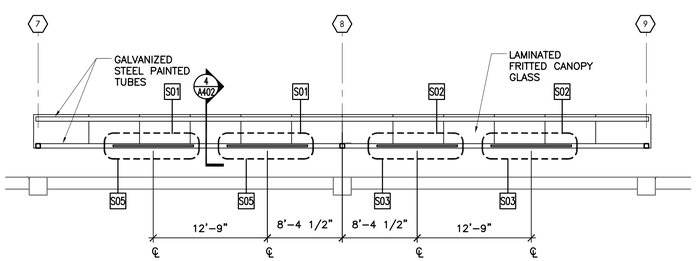

2 A101 ENTRY CANOPY REFLECTED CEILING PLAN
SCALE: 1/8"=1'-0"

GENERAL NOTES

1 – ALL EXISTING CONDITIONS AND DIMENSIONS TO BE FIELD VERIFIED
2 – SEE ALTERNATE DRAWINGS FOR LOCATIONS OF NEW METAL WALL PANEL SYSTEM
3 – [XXX] SEE SIGN SCHEDULE A401

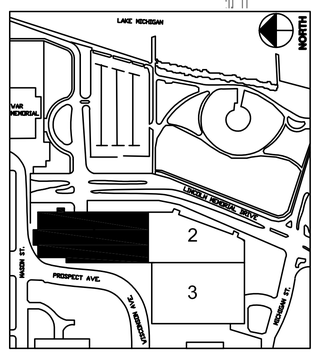

LINCOLN MEMORIAL DRIVE LEVEL PLAN - SECTOR 1

P:\2011 2082\112082 O'Donnell Parking Structure\3-Drawings\A101-A103.dwg

Department of Parks, Recreation and Culture
O'Donnell Park: Parking Structure Facade Improvements
910 East Michigan Street, Milwaukee, Wisconsin 53202-5607

MILWAUKEE COUNTY DEPARTMENT OF TRANSPORTATION AND PUBLIC WORKS
CITY CAMPUS 2711 W. WELLS ST. - 2ND FLOOR MILWAUKEE, WI 53208

REVISIONS:

DATE: **02/22/2011**
PROJECT: **W0114-11415**
SITE NO: **784**
BUILDING NO: **75**

A101

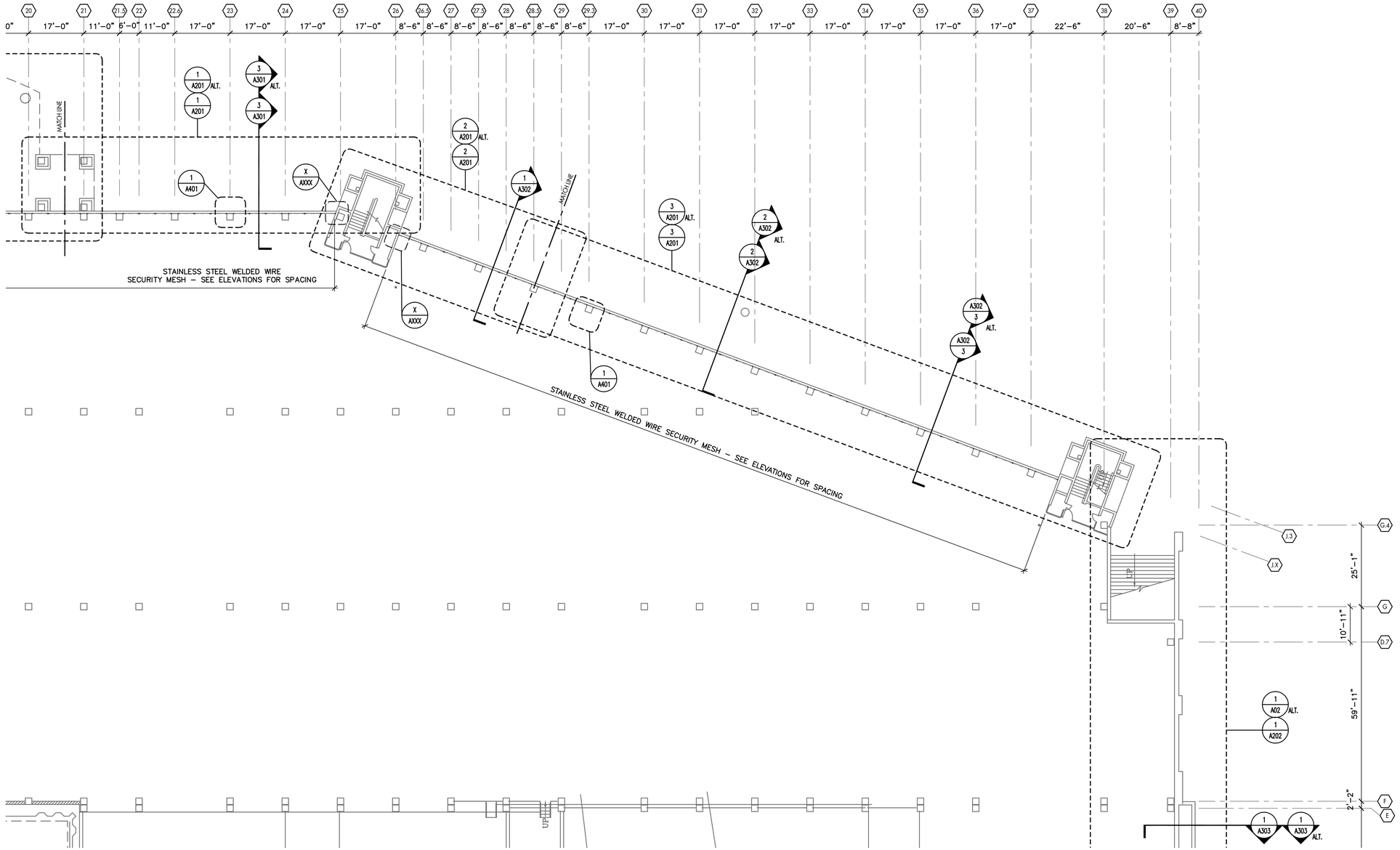

1 A102 LINCOLN MEMORIAL DRIVE LEVEL PLAN - SECTOR 2
SCALE: 1/16"=1'-0"

GENERAL NOTES

1 - ALL EXISTING CONDITIONS AND DIMENSIONS TO BE FIELD VERIFIED

2 - SEE ALTERNATE DRAWINGS FOR LOCATIONS OF NEW METAL WALL PANEL SYSTEM

3 - [XXX] SEE SIGN SCHEDULE A401

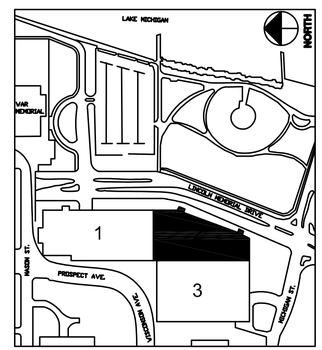

LINCOLN MEMORIAL DRIVE LEVEL PLAN - SECTOR 2

Department of Parks, Recreation and Culture

O'Donnell Park: Parking Structure Facade Improvements

910 East Michigan Street, Milwaukee, Wisconsin 53202-5607

MILWAUKEE COUNTY DEPARTMENT OF TRANSPORTATION AND PUBLIC WORKS
CITY CAMPUS 2711 W. WELLS ST - 2ND FLOOR MILWAUKEE, WI 53208

REVISIONS:

DATE: **02/22/2011**

PROJECT: **W0114-11415**

SITE NO: **784**

BUILDING NO: **75**

A102

P:\2011 2082\1112082 O'Donnell Parking Structure\3-Drawings\A101-A103.dwg

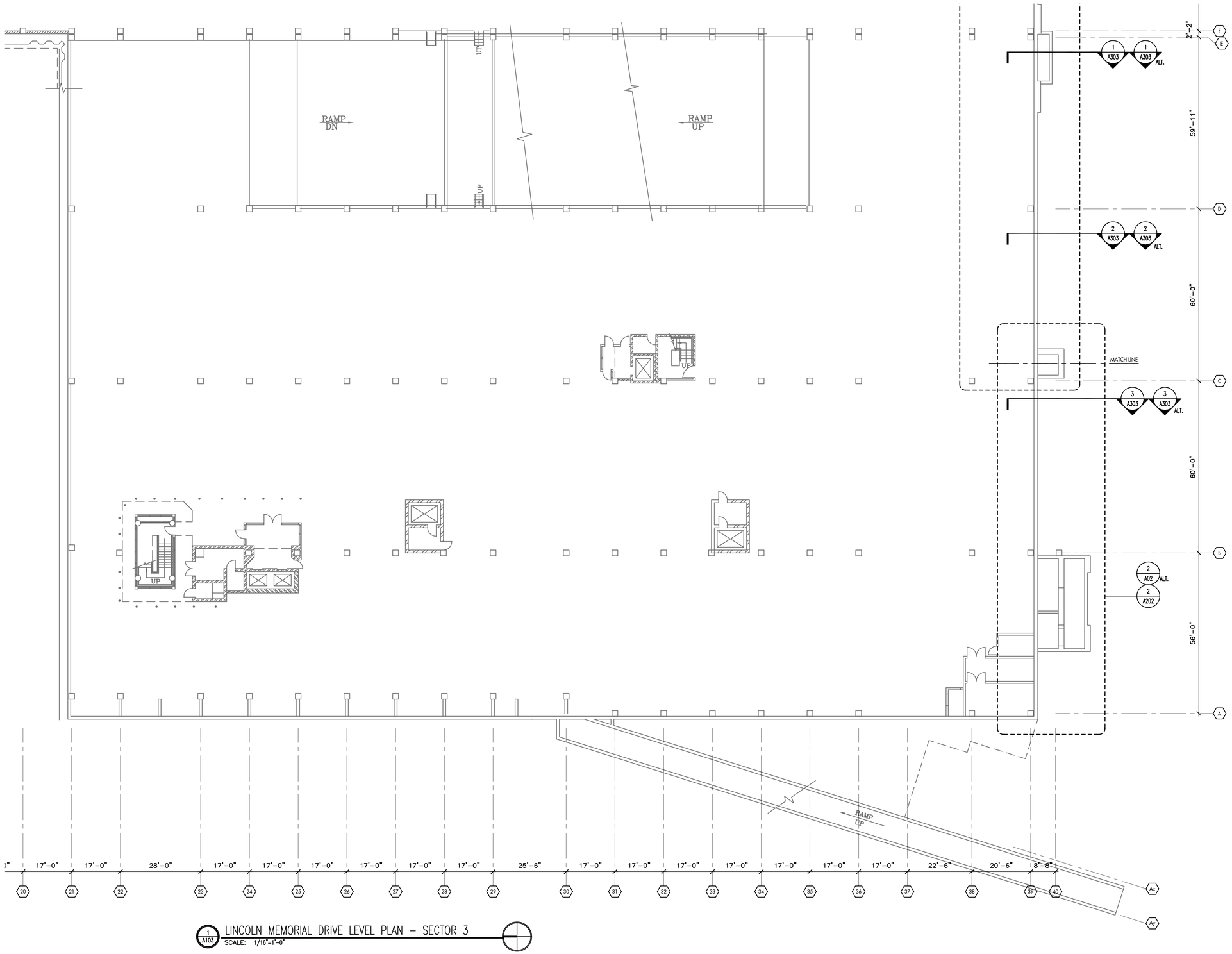

1 A103 LINCOLN MEMORIAL DRIVE LEVEL PLAN – SECTOR 3
SCALE: 1/16"=1'-0"

GENERAL NOTES

1 – ALL EXISTING CONDITIONS AND DIMENSIONS TO BE FIELD VERIFIED
2 – SEE ALTERNATE DRAWINGS FOR LOCATIONS OF NEW METAL WALL PANEL SYSTEM
3 – [xxx] SEE SIGN SCHEDULE A401

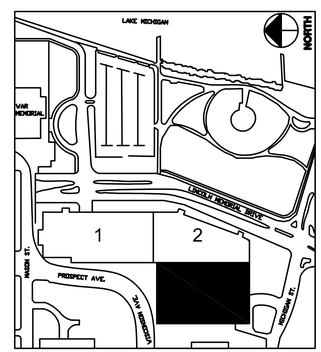

LINCOLN MEMORIAL DRIVE LEVEL PLAN - SECTOR 3

P:\2011 208211\12082 O'Donnell Parking Structure\3-Drawings\A101-A103.dwg

Department of Parks, Recreation and Culture
O'Donnell Park: Parking Structure Facade Improvements
910 East Michigan Street, Milwaukee, Wisconsin 53202-5607

MILWAUKEE COUNTY DEPARTMENT OF TRANSPORTATION AND PUBLIC WORKS
CITY CAMPUS 2711 W. WELLS ST - 2ND FLOOR MILWAUKEE, WI 53208

REVISIONS:

DATE: **02/22/2011**
PROJECT: **W0114-11415**
SITE NO: **784**
BUILDING NO: **75**

A103

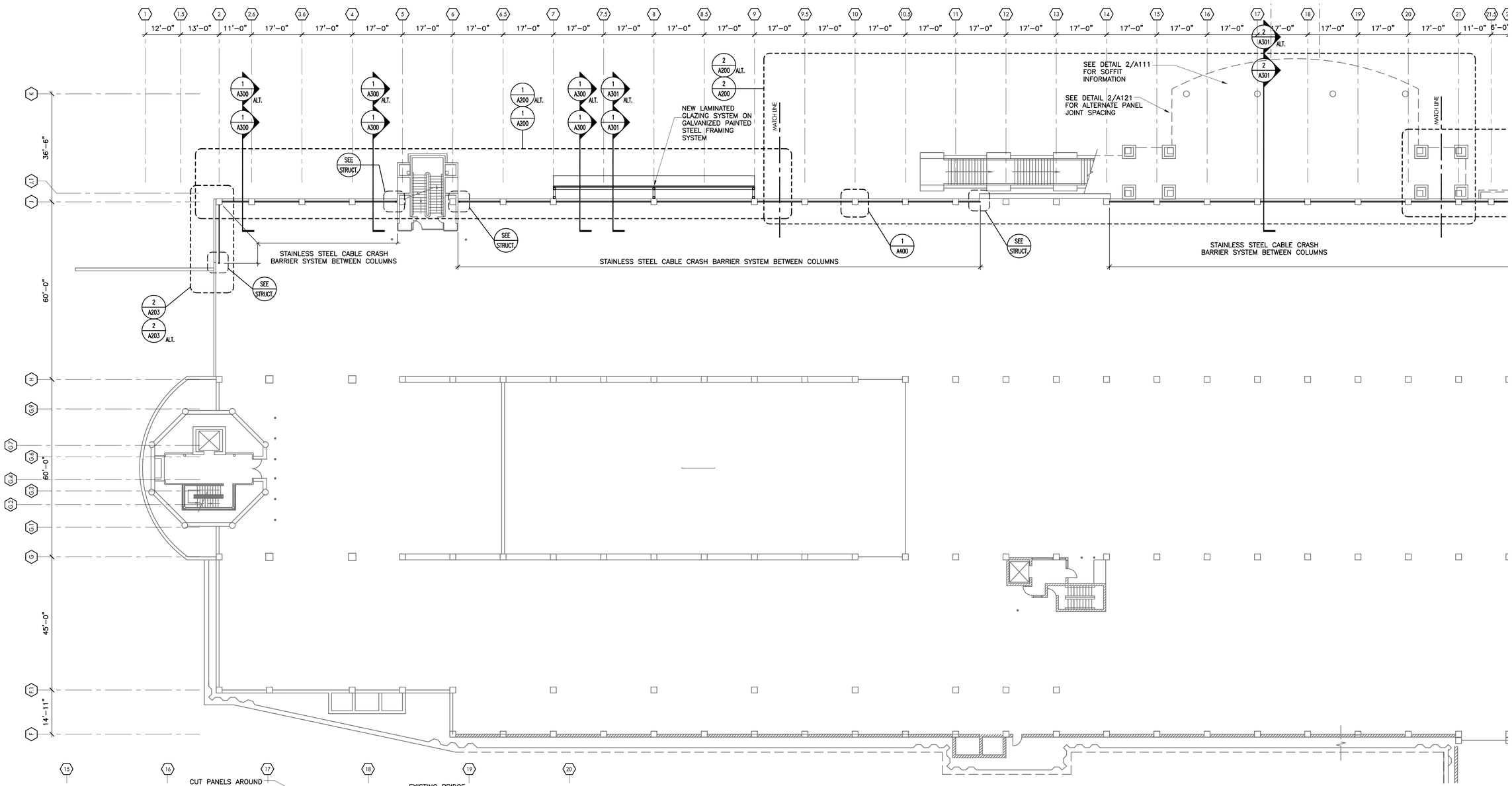

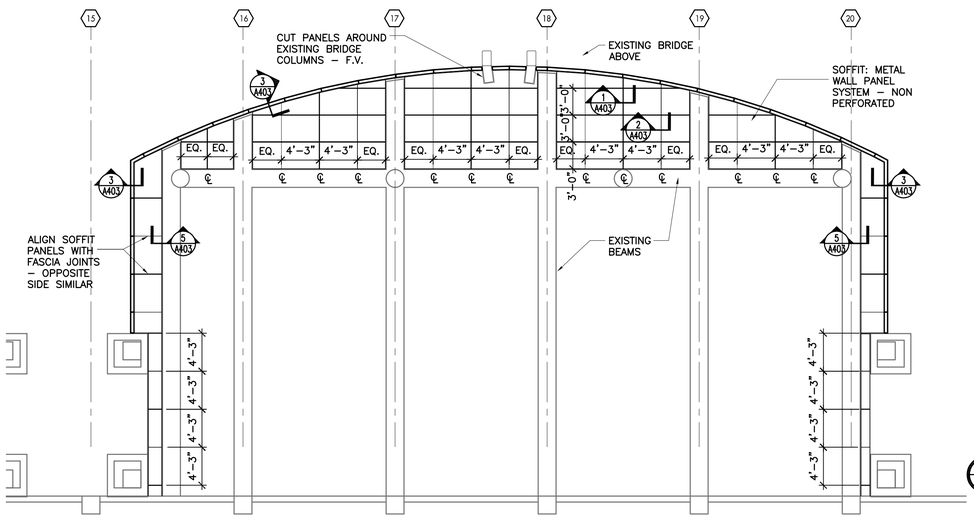

1 A111 MICHIGAN STREET LEVEL PLAN – SECTOR 1
SCALE: 1/16"=1'-0"

2 A111 REFLECTED CEILING PLAN @ OVERHANG
SCALE: 1/8"=1'-0"

GENERAL NOTES

1 – ALL EXISTING CONDITIONS AND DIMENSIONS TO BE FIELD VERIFIED
2 – SEE ALTERNATE DRAWINGS FOR LOCATIONS OF NEW METAL WALL PANEL SYSTEM
3 – xxx SEE SIGN SCHEDULE A401

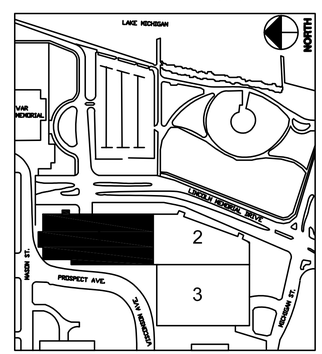

MICHIGAN STREET LEVEL PLAN - SECTOR 1

Department of Parks, Recreation and Culture
O'Donnell Park: Parking Structure Facade Improvements
910 East Michigan Street, Milwaukee, Wisconsin 53202-5607

MILWAUKEE COUNTY DEPARTMENT OF TRANSPORTATION AND PUBLIC WORKS
CITY CAMPUS 2711 W. WELLS ST - 2ND FLOOR MILWAUKEE, WI 53208

REVISIONS:

DATE: 02/22/2011
PROJECT: W0114-11415
SITE NO: 784
BUILDING NO: 75

A111

P:\2011 20821112082 O'Donnell Parking Structure\3-Drawings\A111-A113.dwg

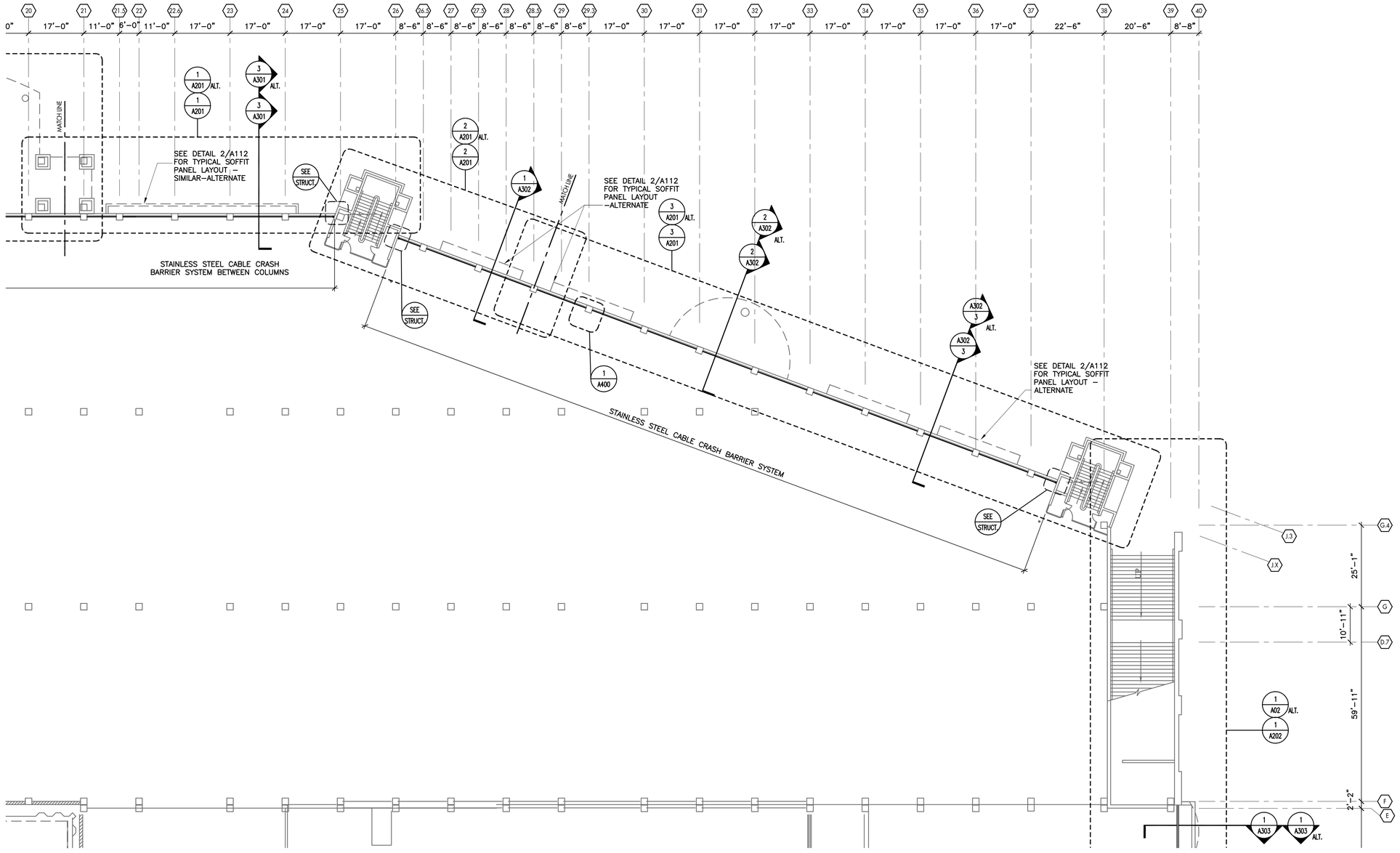

1 A112 MICHIGAN STREET LEVEL PLAN - SECTOR 2
SCALE: 1/16"=1'-0"

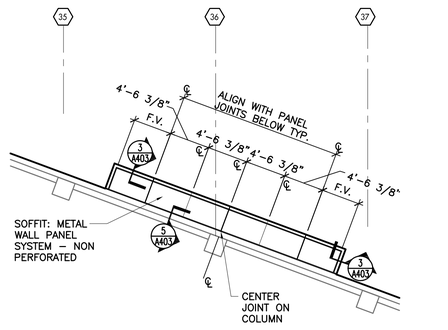

2 A112 TYPICAL SOFFIT DETAIL AT OVERHANGS
SCALE: 1/8"=1'-0"

GENERAL NOTES

1 - ALL EXISTING CONDITIONS AND DIMENSIONS TO BE FIELD VERIFIED
2 - SEE ALTERNATE DRAWINGS FOR LOCATIONS OF NEW METAL WALL PANEL SYSTEM
3 - XXX SEE SIGN SCHEDULE A401

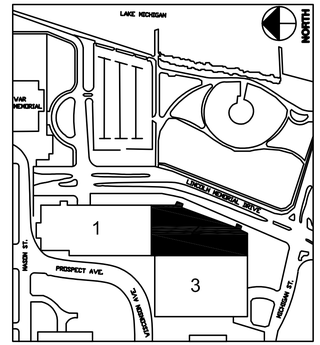

MICHIGAN STREET LEVEL PLAN - SECTOR 2

P:\2011 2082\1112082 O'Donnell Parking Structure\3-Drawings\A111-A113.dwg

Department of Parks, Recreation and Culture
O'Donnell Park: Parking Structure Facade Improvements
910 East Michigan Street, Milwaukee, Wisconsin 53202-5607

MILWAUKEE COUNTY DEPARTMENT OF TRANSPORTATION AND PUBLIC WORKS
CITY CAMPUS 2711 W. WELLS ST - 2ND FLOOR MILWAUKEE, WI 53208

REVISIONS:

DATE: **02/22/2011**
PROJECT: **W0114-11415**
SITE NO: **784**
BUILDING NO: **75**

A112

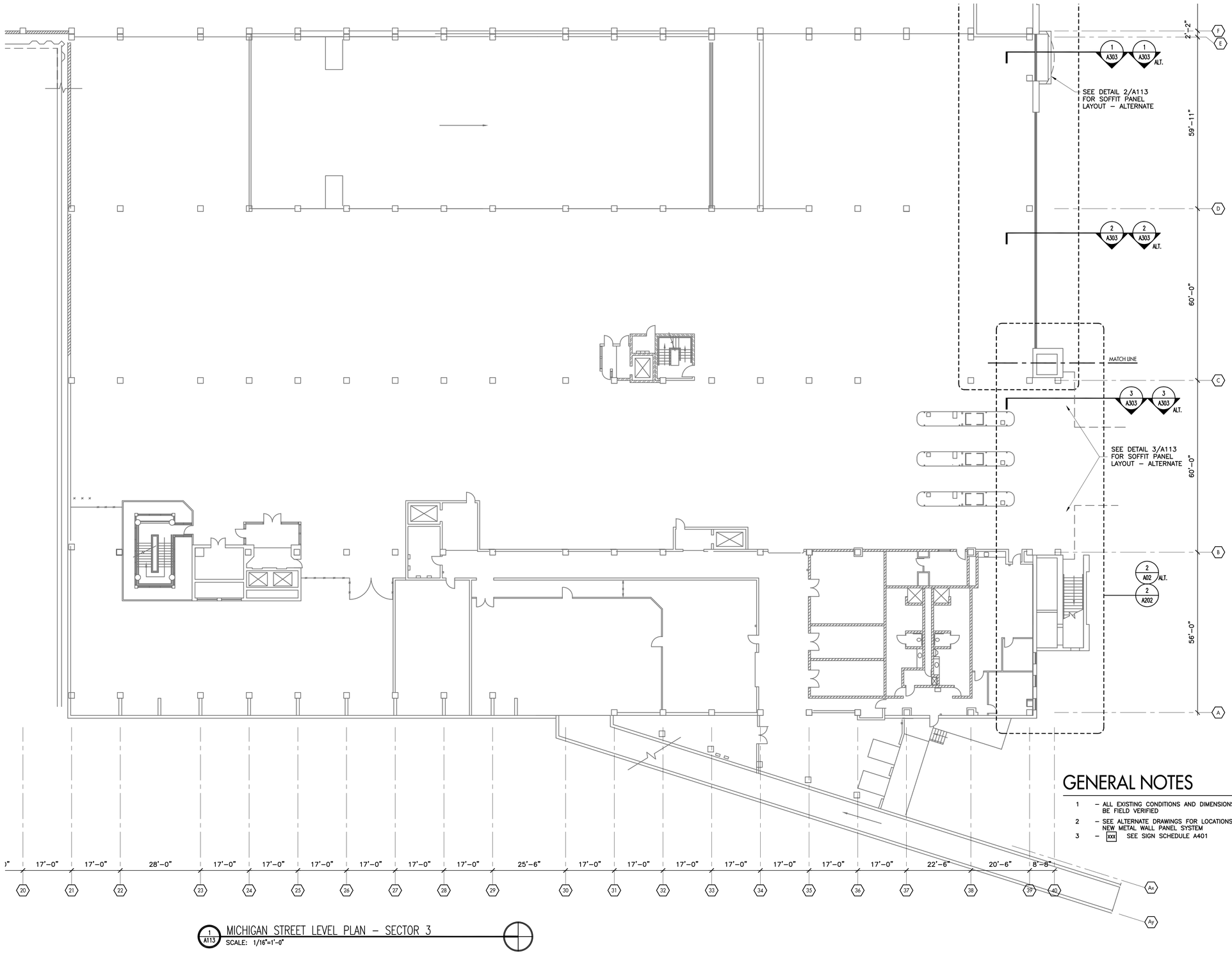

1/A113 MICHIGAN STREET LEVEL PLAN – SECTOR 3
SCALE: 1/16"=1'-0"

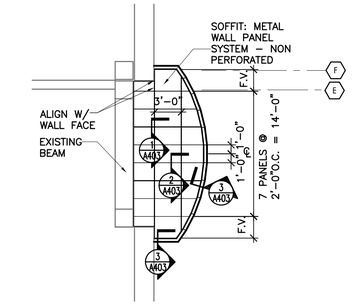

2/A113 SOFFIT DETAIL @ OVERHANG
SCALE: 1/8"=1'-0"

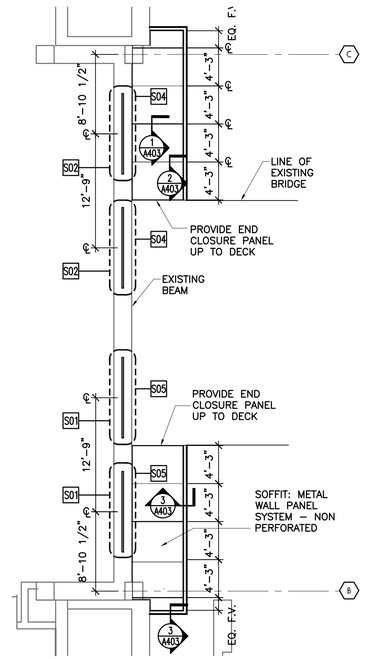

3/A113 SOFFIT DETAIL @ ENTRY
SCALE: 1/8"=1'-0"

GENERAL NOTES

1 – ALL EXISTING CONDITIONS AND DIMENSIONS TO BE FIELD VERIFIED
2 – SEE ALTERNATE DRAWINGS FOR LOCATIONS OF NEW METAL WALL PANEL SYSTEM.
3 – XXX SEE SIGN SCHEDULE A401

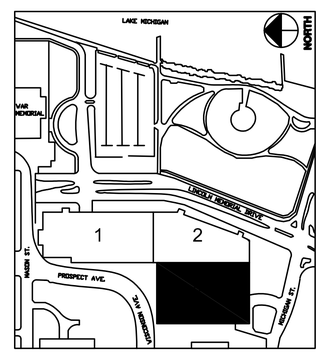

MICHIGAN STREET LEVEL PLAN - SECTOR 3

Department of Parks, Recreation and Culture
O'Donnell Park: Parking Structure Facade Improvements
910 East Michigan Street, Milwaukee, Wisconsin 53202-5607

MILWAUKEE COUNTY DEPARTMENT OF TRANSPORTATION AND PUBLIC WORKS
CITY CAMPUS 2711 W. WELLS ST. 2ND FLOOR MILWAUKEE, WI 53208

REVISIONS:

DATE: 02/22/2011
PROJECT: W0114-11415
SITE NO: 784
BUILDING NO: 75

A113

P:\2011 208211112082 O'Donnell Parking Structure\3-Drawings\A111-A113.dwg

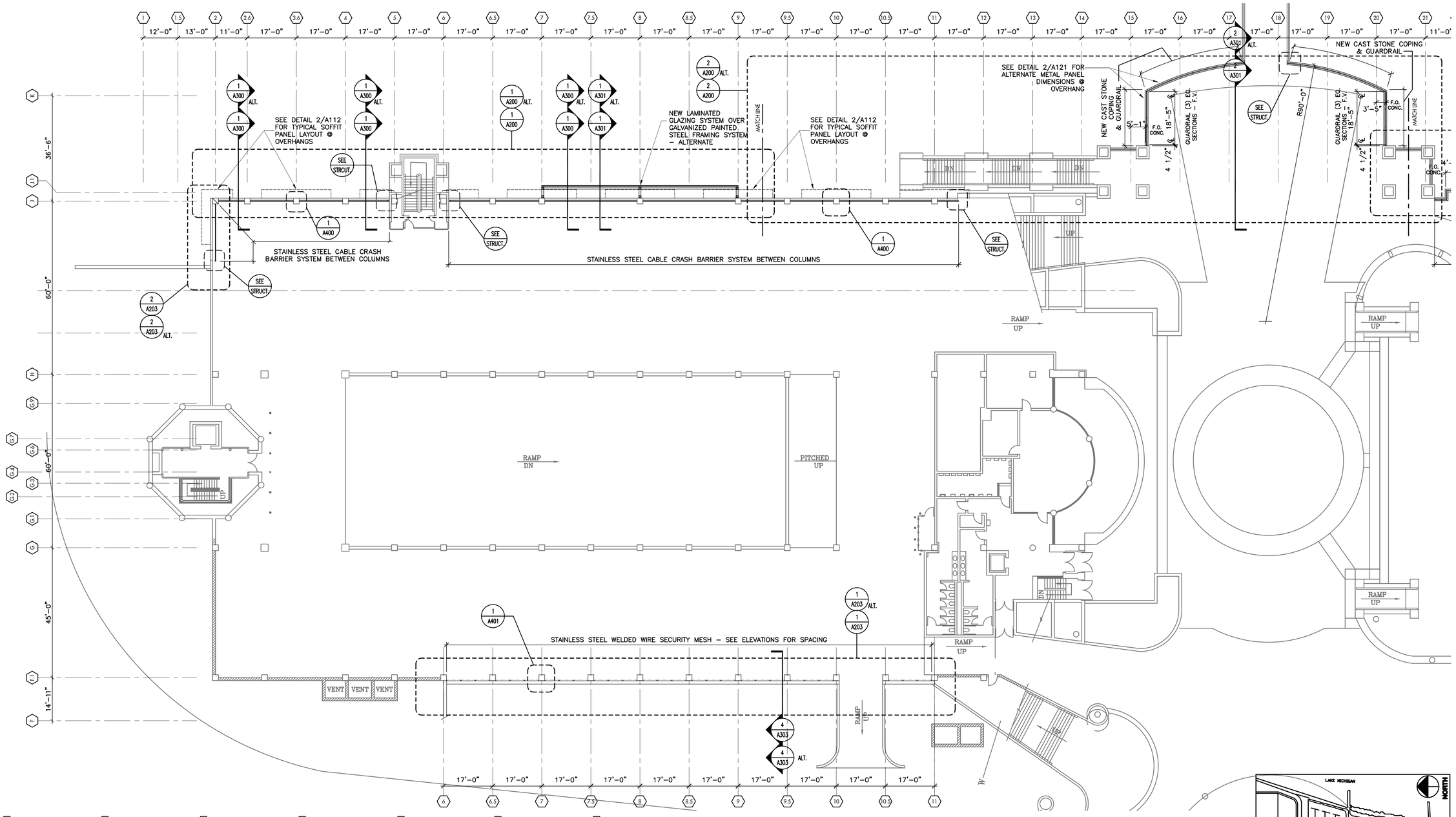

1 A121 WISCONSIN AVENUE LEVEL PLAN – SECTOR 1
SCALE: 1/16"=1'-0"

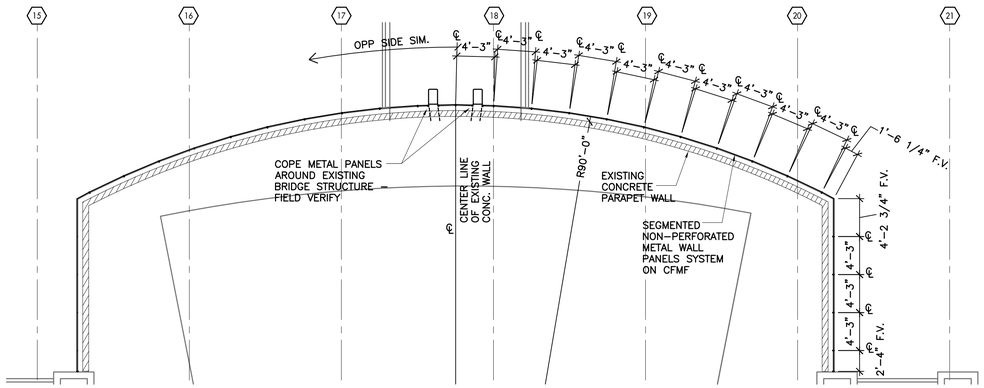

2 A121 ALT. METAL PANEL @ OVERHANG DETAIL
SCALE: 1/8"=1'-0"

GENERAL NOTES

1 – ALL EXISTING CONDITIONS AND DIMENSIONS TO BE FIELD VERIFIED
2 – SEE ALTERNATE DRAWINGS FOR LOCATIONS OF NEW METAL WALL PANEL SYSTEM
3 – [XXX] SEE SIGN SCHEDULE A401

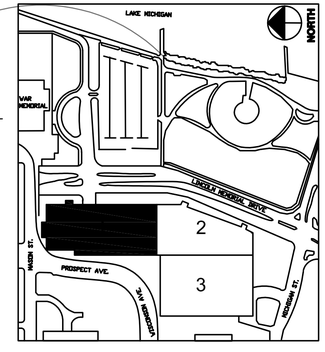

WISCONSIN AVENUE LEVEL PLAN - SECTOR 1

Department of Parks, Recreation and Culture
O'Donnell Park: Parking Structure Facade Improvements
910 East Michigan Street, Milwaukee, Wisconsin 53202-5607

MILWAUKEE COUNTY DEPARTMENT OF TRANSPORTATION AND PUBLIC WORKS
CITY CAMPUS 2711 W. WELLS ST - 2ND FLOOR MILWAUKEE, WI 53208

REVISIONS:

DATE: 02/22/2011
PROJECT: W0114-11415
SITE NO: 784
BUILDING NO: 75

A121

P:\2011 208\112082 O'Donnell Parking Structure\3-Drawings\A121-A123.dwg

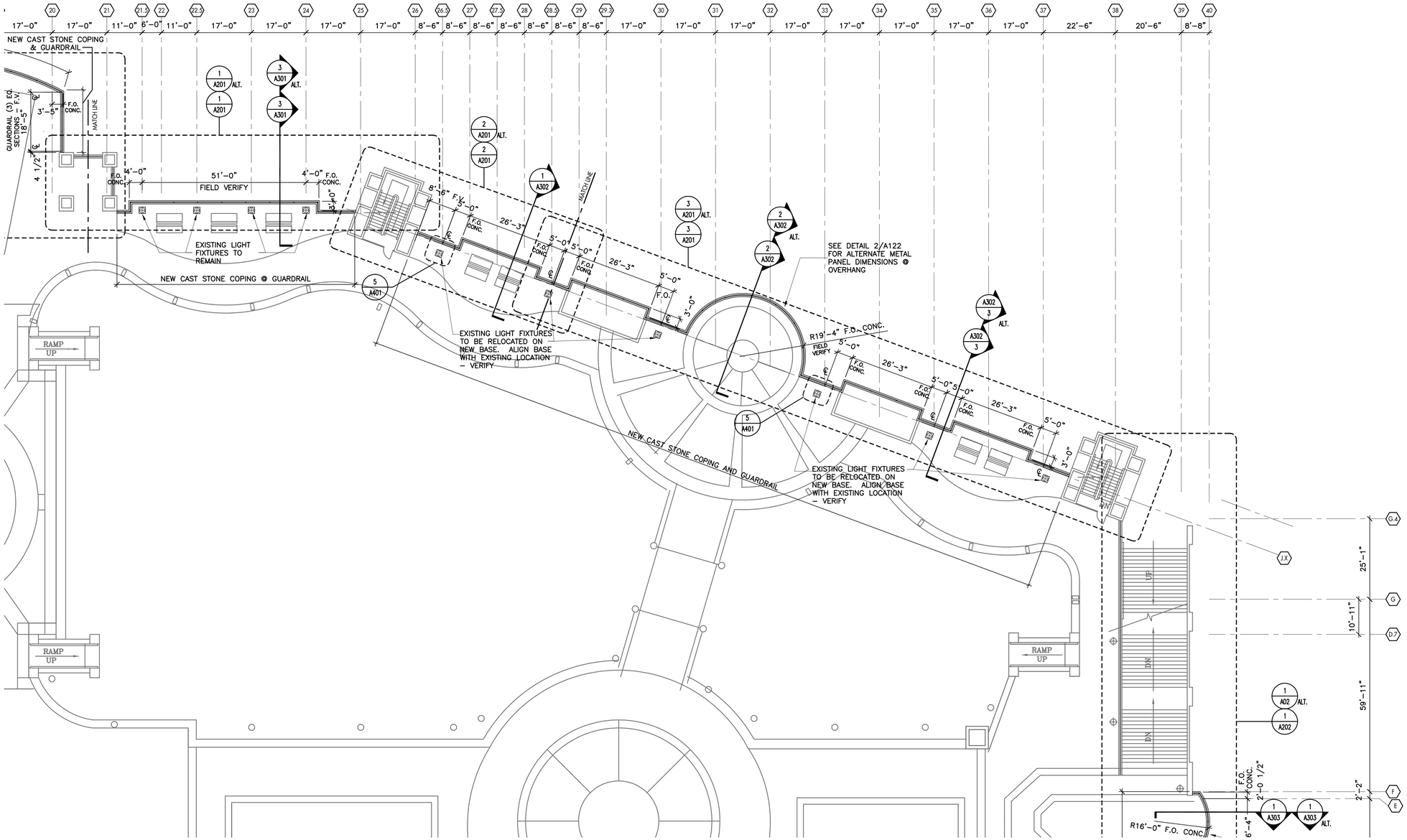

1 A122 WISCONSIN AVENUE LEVEL PLAN – SECTOR 2
SCALE: 1/16"=1'-0"

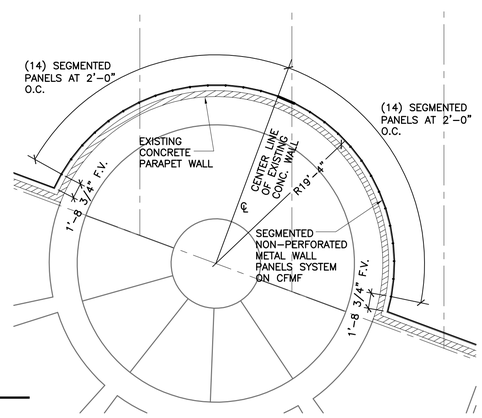

2 A122 ALT. METAL PANEL @ OVERHANG DETAIL
SCALE: 1/8" = 1'-0"

GENERAL NOTES

1 – ALL EXISTING CONDITIONS AND DIMENSIONS TO BE FIELD VERIFIED
2 – SEE ALTERNATE DRAWINGS FOR LOCATIONS OF NEW METAL WALL PANEL SYSTEM
3 – XXX SEE SIGN SCHEDULE A401

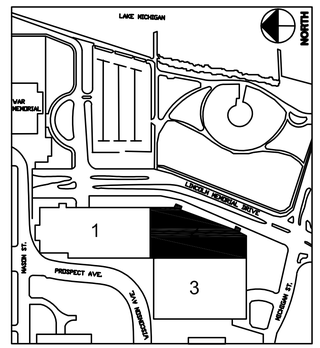

WISCONSIN AVENUE LEVEL PLAN - SECTOR 2

P:\2011 208211\12082 O'Donnell Parking Structure\3-Drawings\A121-A123.dwg

Department of Parks, Recreation and Culture
O'Donnell Park: Parking Structure Facade Improvements
910 East Michigan Street, Milwaukee, Wisconsin 53202-5607

MILWAUKEE COUNTY DEPARTMENT OF TRANSPORTATION AND PUBLIC WORKS
CITY CAMPUS 2711 W. WELLS ST - 2ND FLOOR MILWAUKEE, WI 53208

REVISIONS:

DATE: 02/22/2011
PROJECT: W0114-11415
SITE NO: 784
BUILDING NO: 75

A122

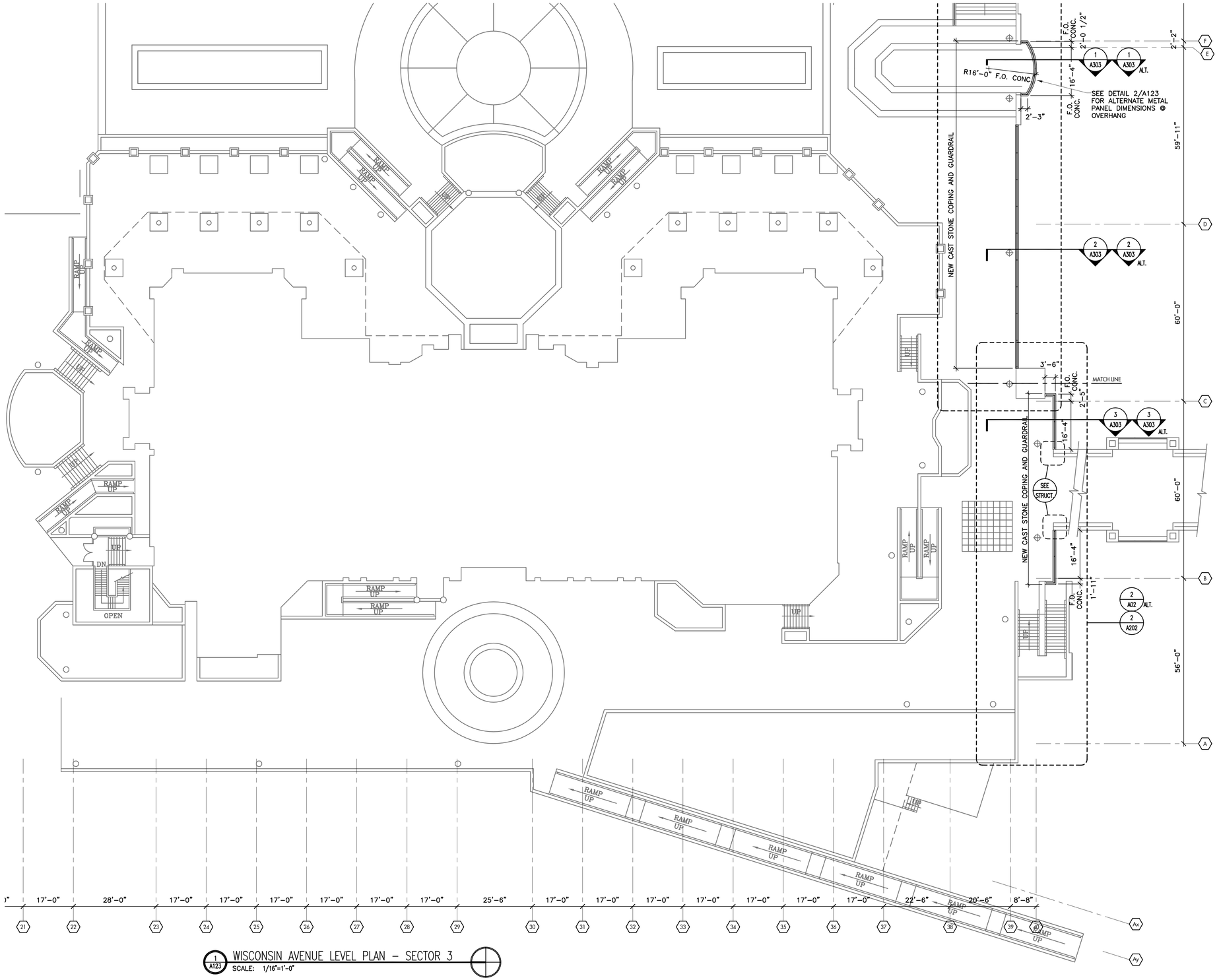

1 A123 WISCONSIN AVENUE LEVEL PLAN – SECTOR 3
SCALE: 1/16"=1'-0"

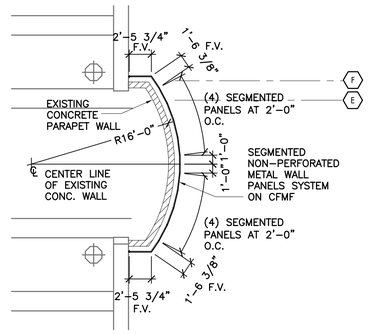

2 A123 ALT. METAL PANEL @ OVERHANG DETAIL
SCALE: 1/8"=1'-0"

GENERAL NOTES

1 – ALL EXISTING CONDITIONS AND DIMENSIONS TO BE FIELD VERIFIED

2 – SEE ALTERNATE DRAWINGS FOR LOCATIONS OF NEW METAL WALL PANEL SYSTEM

3 – [XXX] SEE SIGN SCHEDULE A401

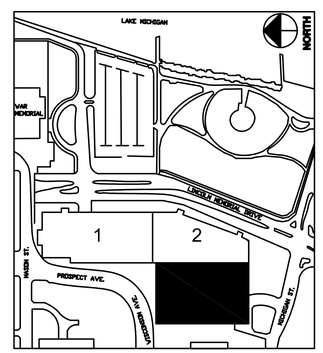

WISCONSIN AVENUE LEVEL PLAN - SECTOR 3

P:\2011 2082\1112082 O'Donnell Parking Structure\3-Drawings\A121-A123.dwg

Department of Parks, Recreation and Culture

O'Donnell Park: Parking Structure Facade Improvements

910 East Michigan Street, Milwaukee, Wisconsin 53202-5607

MILWAUKEE COUNTY DEPARTMENT OF TRANSPORTATION AND PUBLIC WORKS
CITY CAMPUS 2711 W. WELLS ST - 2ND FLOOR MILWAUKEE, WI 53208

REVISIONS:

DATE: **02/22/2011**

PROJECT: **W0114-11415**

SITE NO: **784**

BUILDING NO: **75**

A123

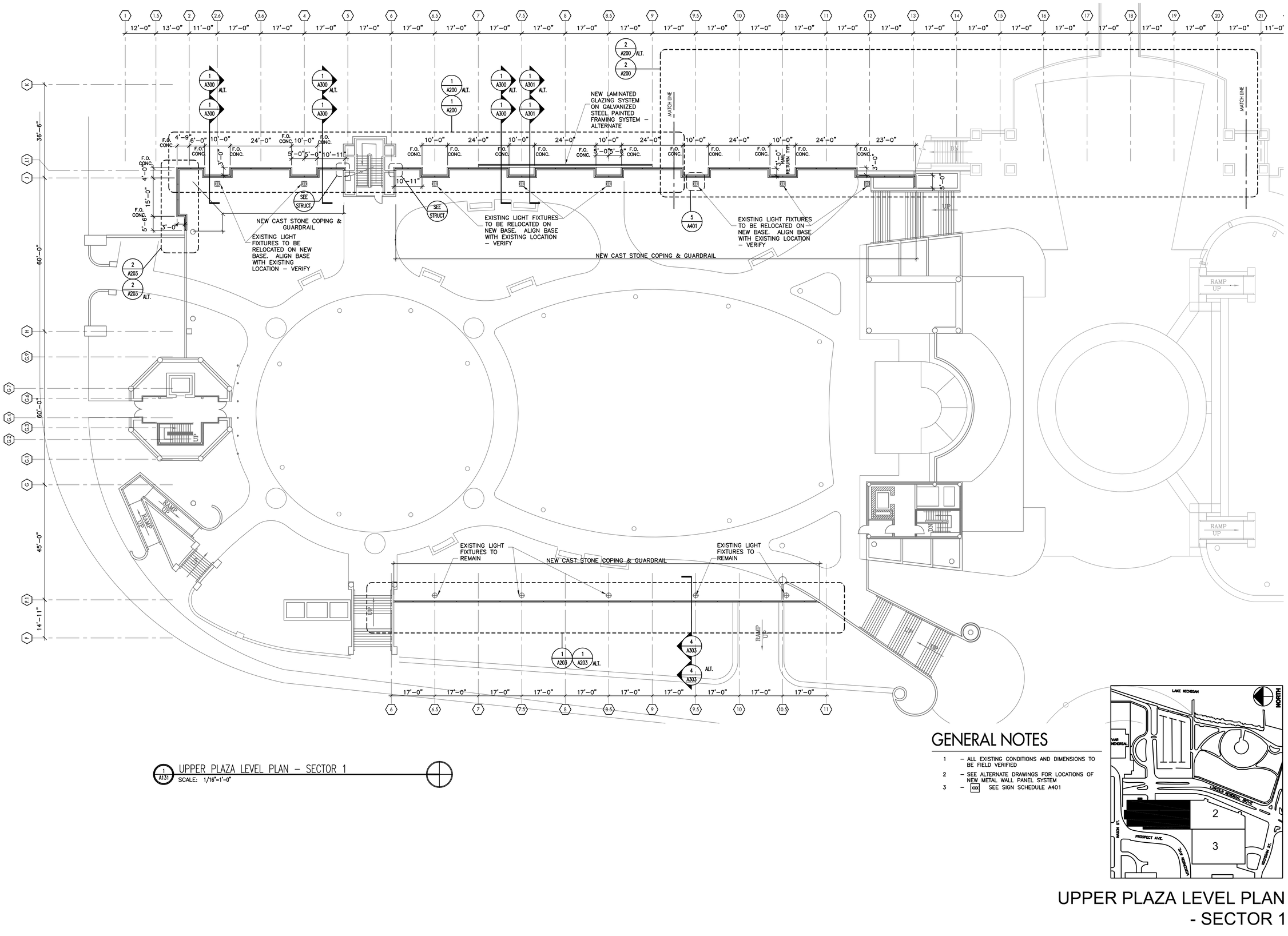

GENERAL NOTES

1 – ALL EXISTING CONDITIONS AND DIMENSIONS TO BE FIELD VERIFIED

2 – SEE ALTERNATE DRAWINGS FOR LOCATIONS OF NEW METAL WALL PANEL SYSTEM.

3 – [XXX] SEE SIGN SCHEDULE A401

1 A131 UPPER PLAZA LEVEL PLAN – SECTOR 1
SCALE: 1/16"=1'-0"

UPPER PLAZA LEVEL PLAN - SECTOR 1

Department of Parks, Recreation and Culture

O'Donnell Park: Parking Structure Facade Improvements

910 East Michigan Street, Milwaukee, Wisconsin 53202-5607

MILWAUKEE COUNTY DEPARTMENT OF TRANSPORTATION AND PUBLIC WORKS
CITY CAMPUS 2711 W. WELLS ST - 2ND FLOOR MILWAUKEE, WI 53208

REVISIONS:

DATE: **02/22/2011**

PROJECT: **W0114-11415**

SITE NO: **784**

BUILDING NO: **75**

A131

P:\2011 208211\12082 O'Donnell Parking Structure\3-Drawings\A131.dwg

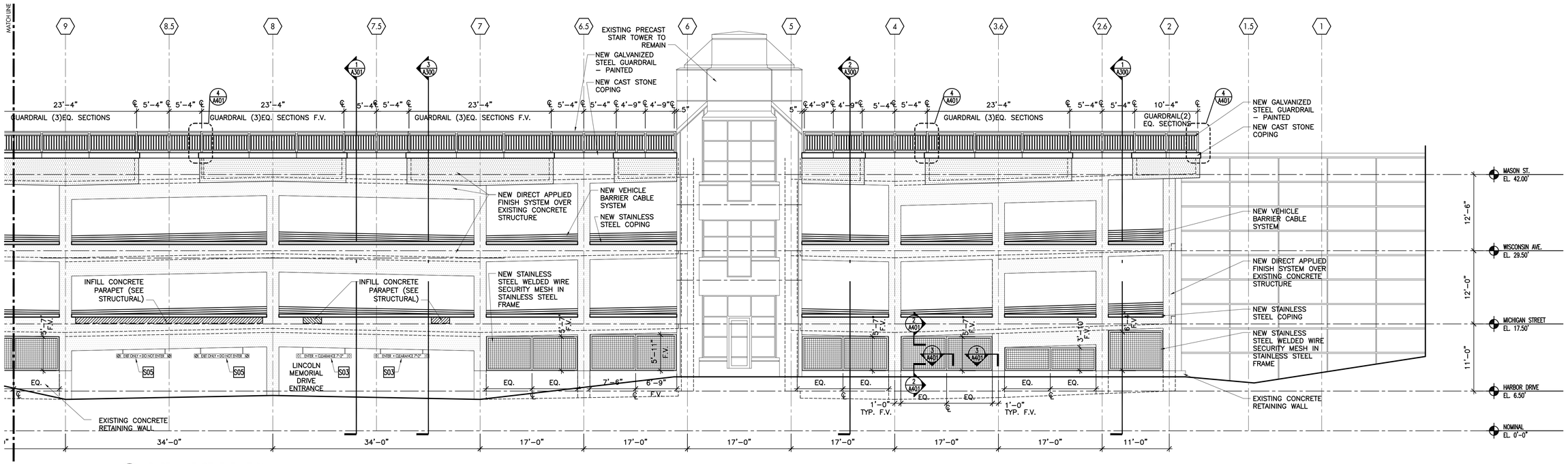

1 A200 PARTIAL EAST ELEVATION
SCALE: 1/8"=1'–0"

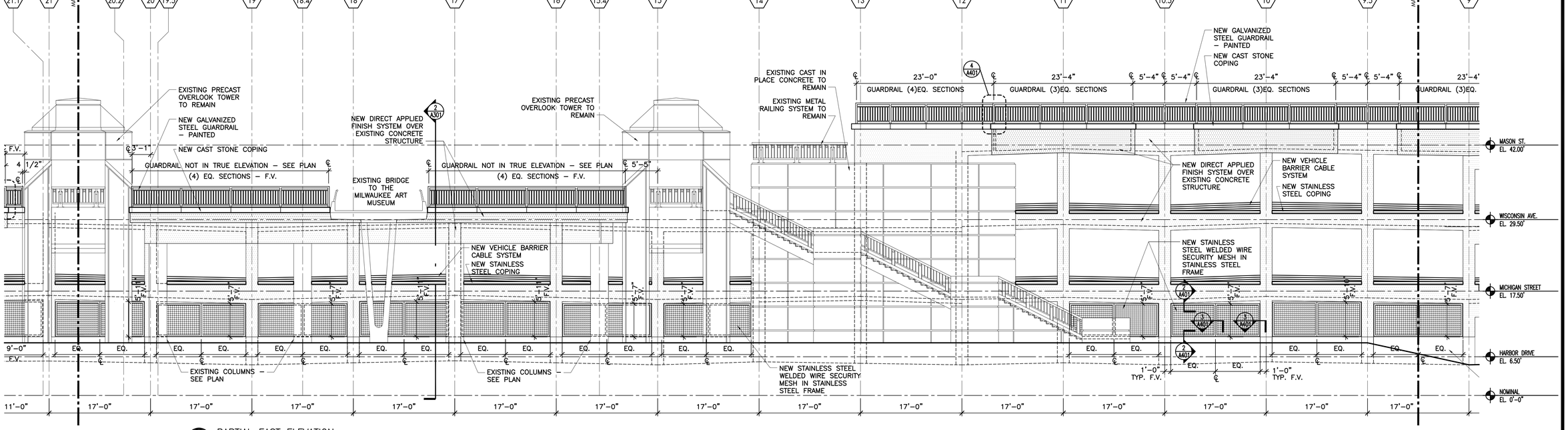

2 A200 PARTIAL EAST ELEVATION
SCALE: 1/8"=1'–0"

EXTERIOR ELEVATIONS

A200

P:\2011 2082112082 O'Donnell Parking Structure\3-Drawings\A200.dwg

Department of Parks, Recreation and Culture

O'Donnell Park: Parking Structure Facade Improvements

910 East Michigan Street, Milwaukee, Wisconsin 53202-5607

MILWAUKEE COUNTY DEPARTMENT OF TRANSPORTATION AND PUBLIC WORKS

CITY CAMPUS 2711 W. WELLS ST - 2ND FLOOR MILWAUKEE, WI 53208

REVISIONS:

DATE: 02/22/2011

PROJECT: W0114-11415

SITE NO: 784

BUILDING NO: 75

GENERAL NOTES

1 – ALL EXISTING CONDITIONS AND DIMENSIONS TO BE FIELD VERIFIED

2 – METAL PANEL JOINTS AT OVERHANG TO ALIGN WITH PANELS BELOW UNLESS NOTED ON DRAWINGS

3 – XXX SEE SIGN SCHEDULE A401

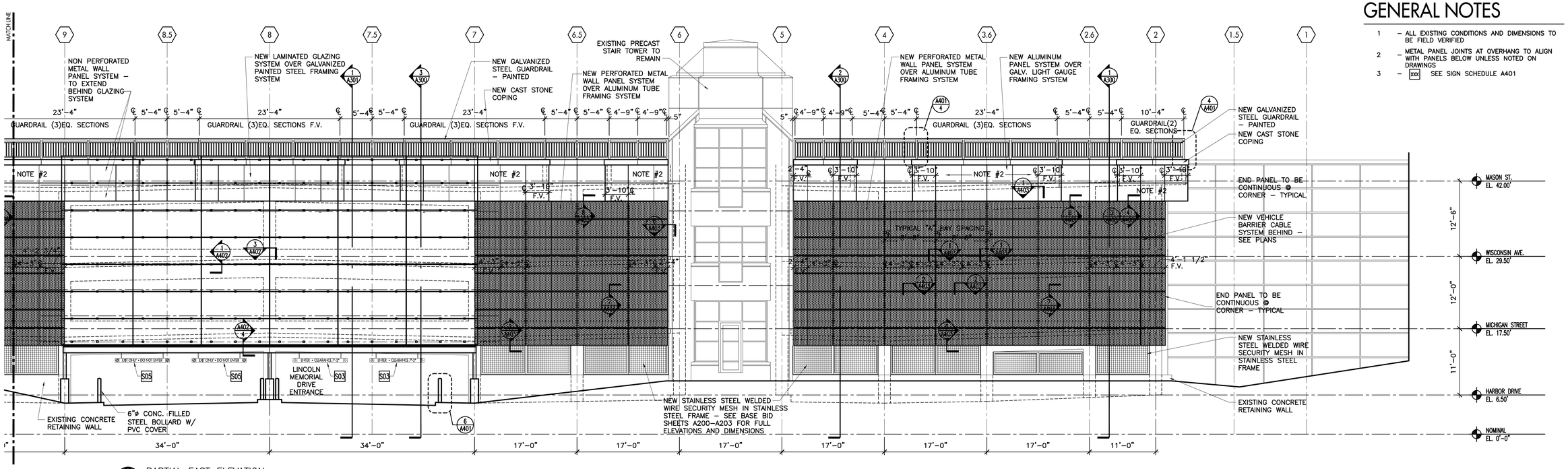

1 A200 PARTIAL EAST ELEVATION
SCALE: 1/8"=1'-0"

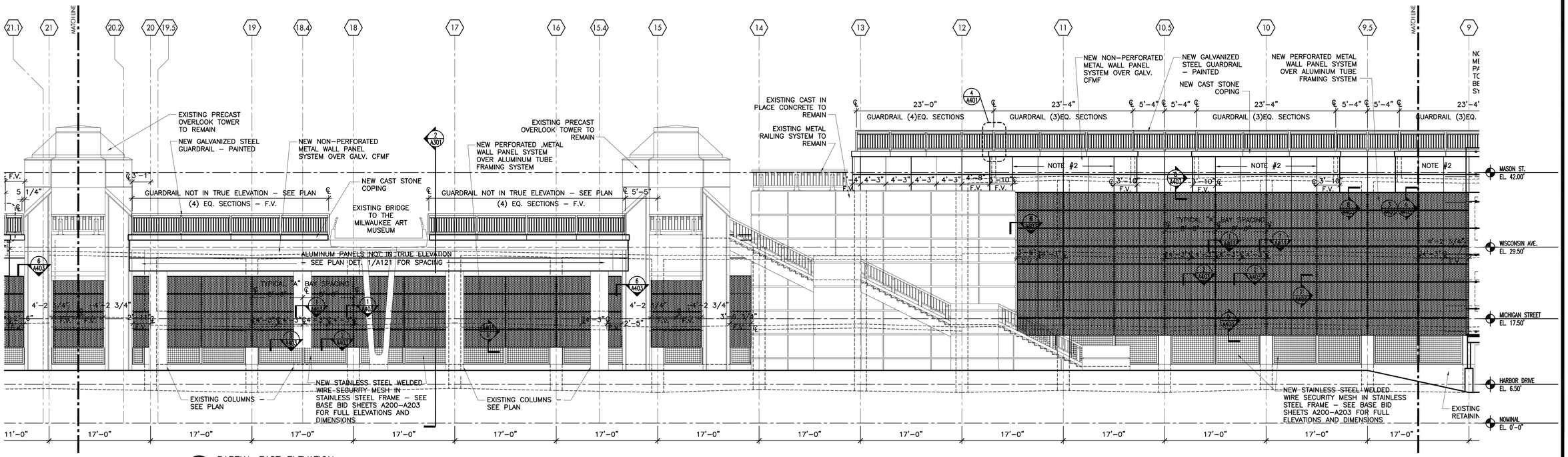

2 A200 PARTIAL EAST ELEVATION
SCALE: 1/8"=1'-0"

EXTERIOR ELEVATIONS

Department of Parks, Recreation and Culture
O'Donnell Park: Parking Structure Facade Improvements
910 East Michigan Street, Milwaukee, Wisconsin 53202-5607

MILWAUKEE COUNTY DEPARTMENT OF TRANSPORTATION AND PUBLIC WORKS
CITY CAMPUS 2711 W. WELLS ST - 2ND FLOOR MILWAUKEE, WI 53208

REVISIONS:

DATE: 02/22/2011

PROJECT: W0114-11415

SITE NO: 784

BUILDING NO: 75

A200 -Alt

P:\2011 2082112082 O'Donnell Parking Structure\3-Drawings\A200 -Alt.dwg

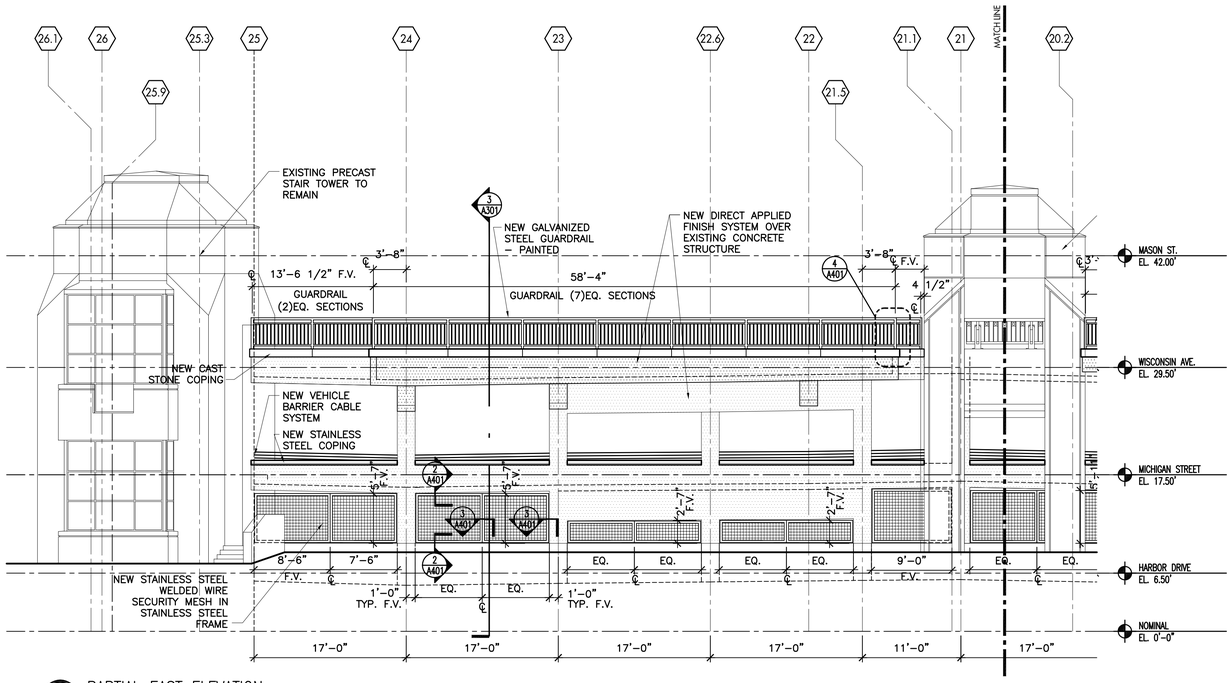

1 A201 PARTIAL EAST ELEVATION
SCALE: 1/8"=1'-0"

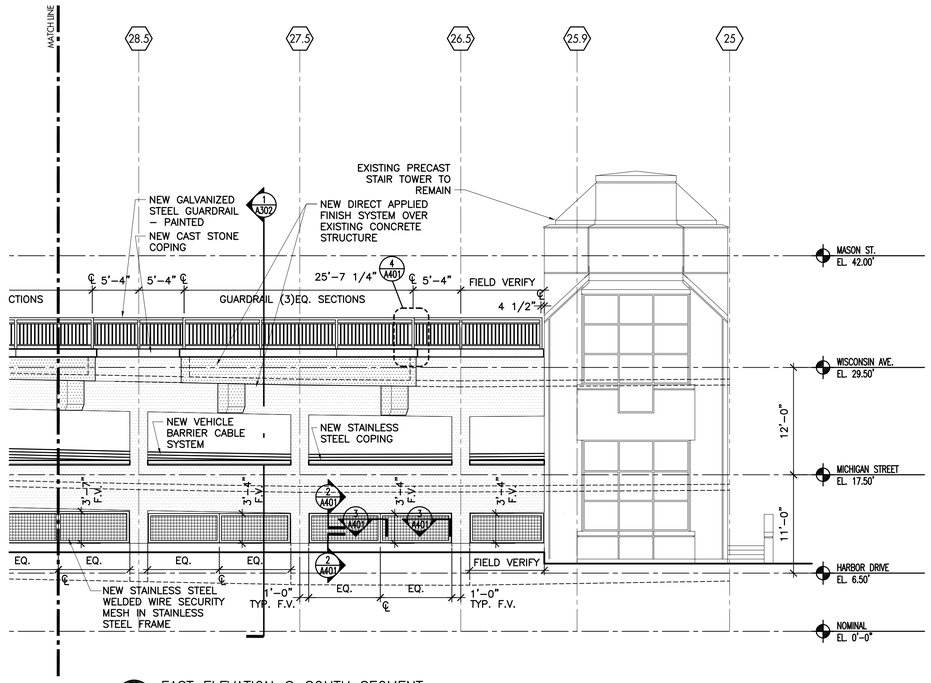

2 A201 EAST ELEVATION @ SOUTH SEGMENT
SCALE: 1/8"=1'-0"

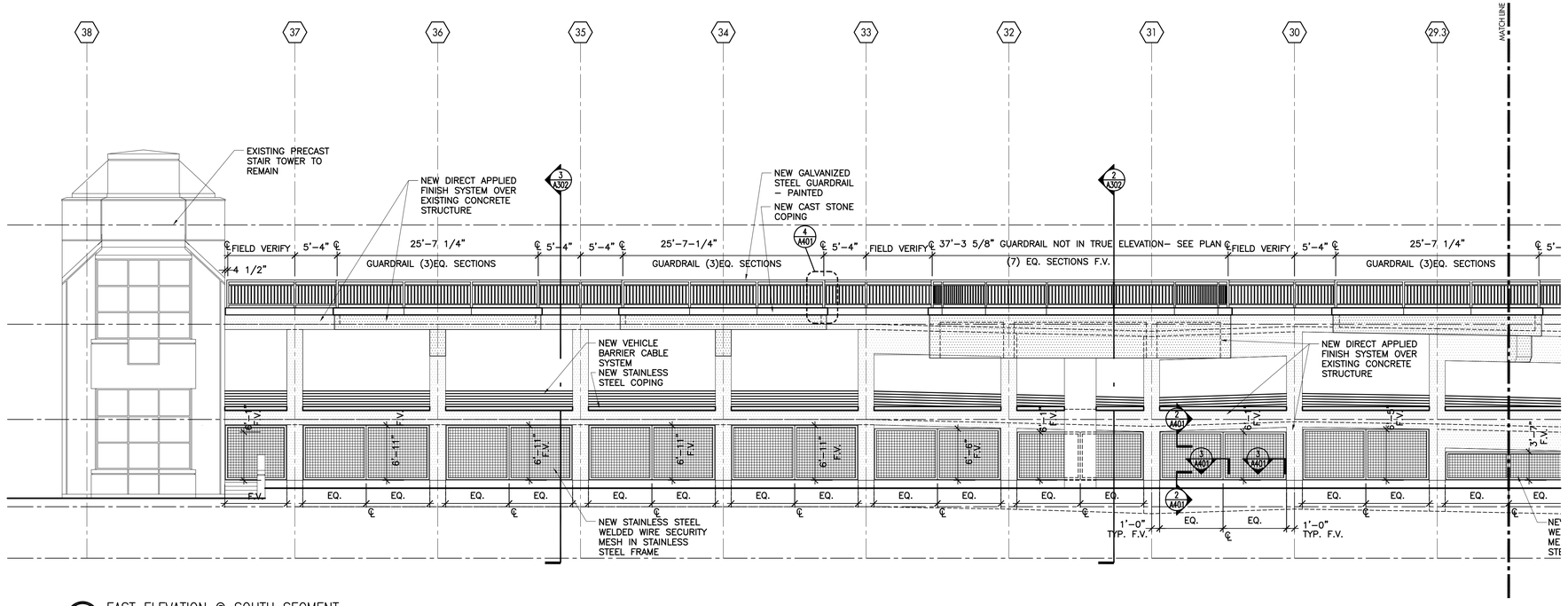

3 A201 EAST ELEVATION @ SOUTH SEGMENT
SCALE: 1/8"=1'-0"

P:\2011 2082112082 O'Donnell Parking Structure\3-Drawings\A200.dwg

Department of Parks, Recreation and Culture

O'Donnell Park: Parking Structure Facade Improvements

910 East Michigan Street, Milwaukee, Wisconsin 53202-5607

MILWAUKEE COUNTY DEPARTMENT OF TRANSPORTATION AND PUBLIC WORKS
CITY CAMPUS 2711 W. WELLS ST - 2ND FLOOR MILWAUKEE, WI 53208

REVISIONS:

DATE: **02/22/2011**

PROJECT: **W0114-11415**

SITE NO: **784**

BUILDING NO: **75**

EXTERIOR ELEVATIONS

A201

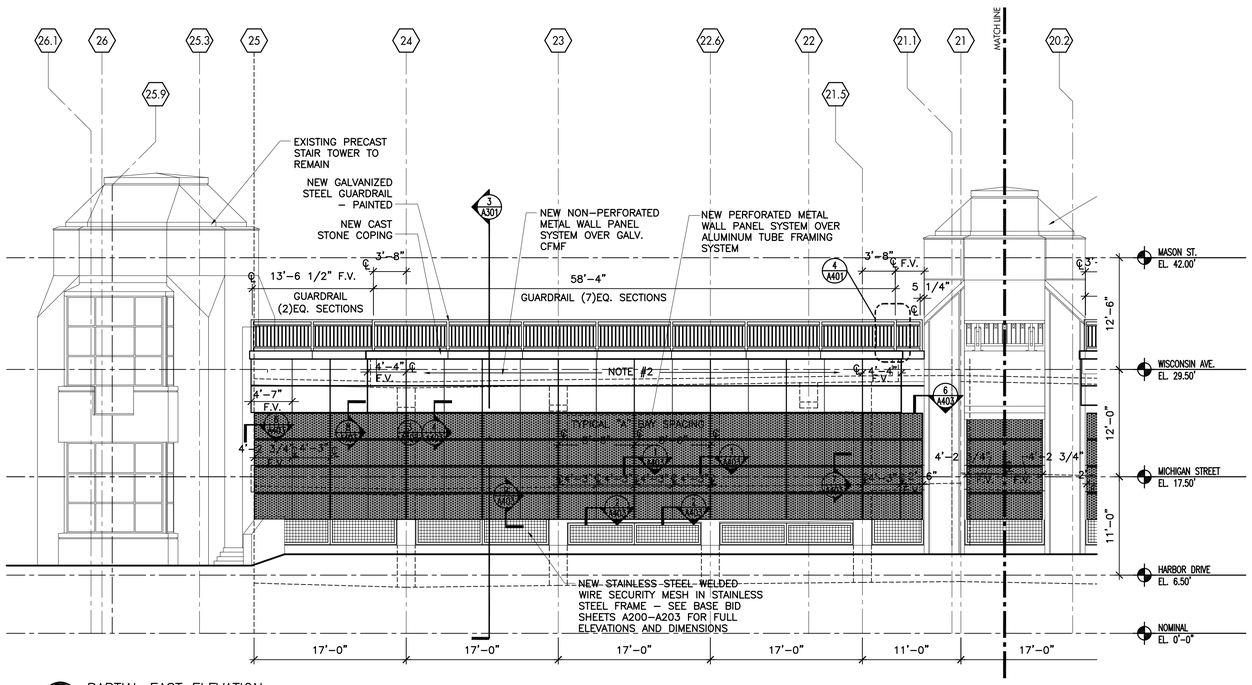

1 A201 PARTIAL EAST ELEVATION
SCALE: 1/8"=1'–0"

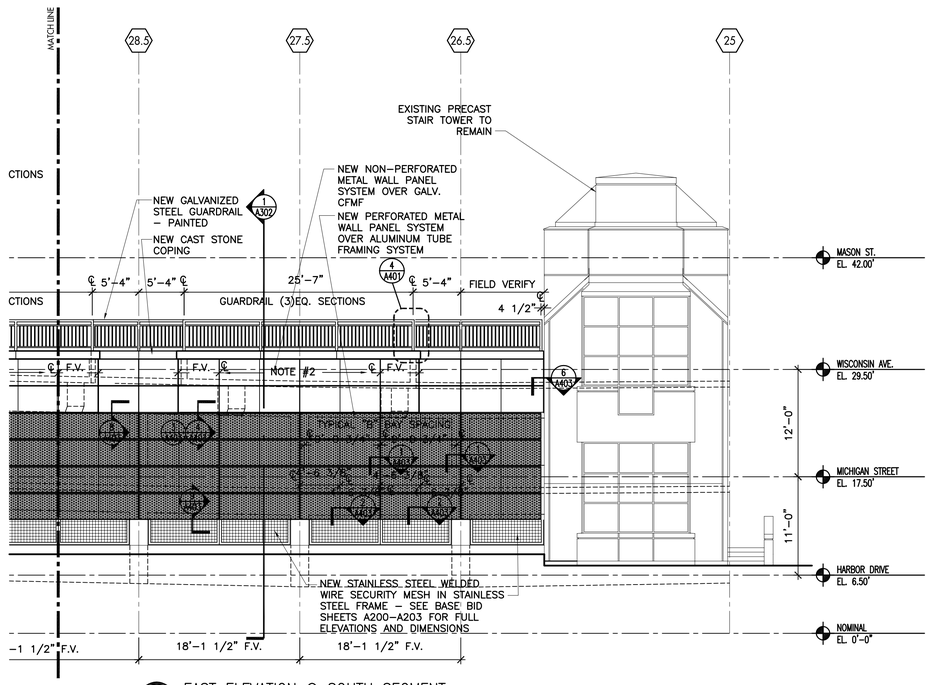

2 A201 EAST ELEVATION @ SOUTH SEGMENT
SCALE: 1/8"=1'–0"

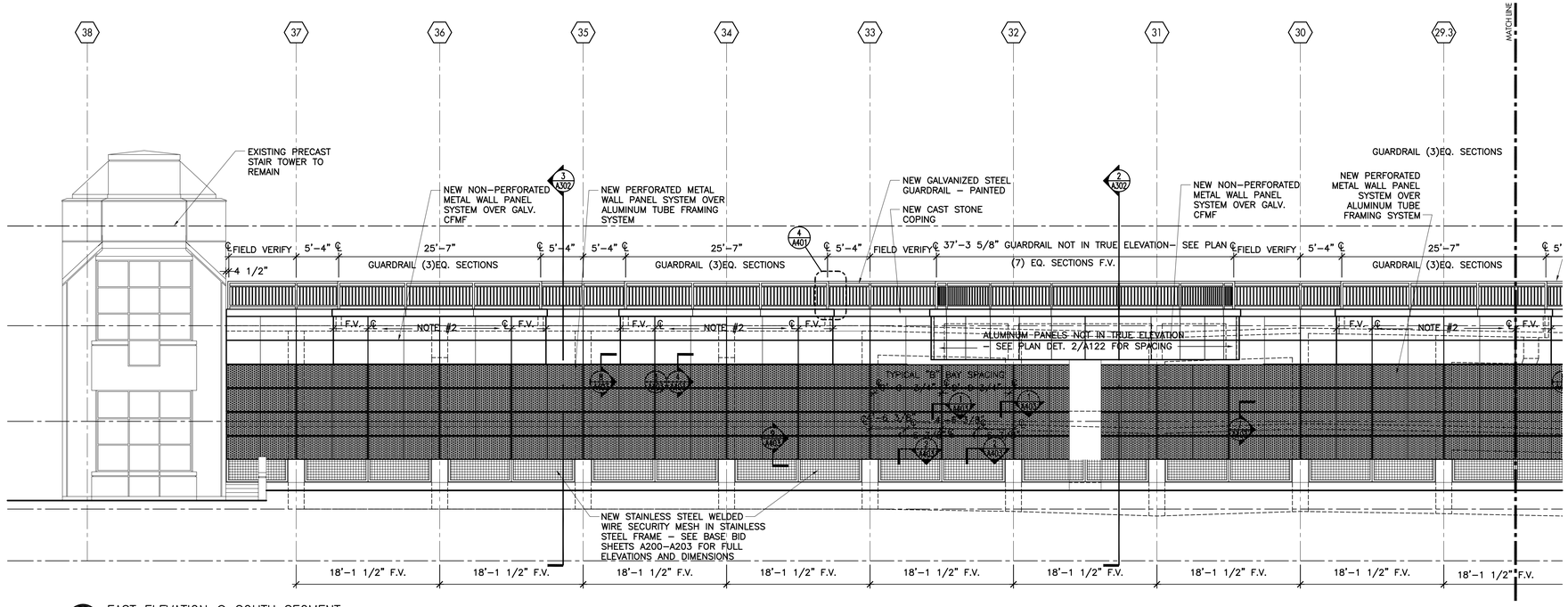

3 A201 EAST ELEVATION @ SOUTH SEGMENT
SCALE: 1/8"=1'–0"

GENERAL NOTES

1 – ALL EXISTING CONDITIONS AND DIMENSIONS TO BE FIELD VERIFIED

2 – METAL PANEL JOINTS AT OVERHANG TO ALIGN WITH PANELS BELOW UNLESS NOTED ON DRAWINGS

3 – [XXX] SEE SIGN SCHEDULE A401

EXTERIOR ELEVATIONS

Department of Parks, Recreation and Culture

O'Donnell Park: Parking Structure Facade Improvements

910 East Michigan Street, Milwaukee, Wisconsin 53202-5607

MILWAUKEE COUNTY DEPARTMENT OF TRANSPORTATION AND PUBLIC WORKS

CITY CAMPUS 2711 W. WELLS ST - 2ND FLOOR MILWAUKEE, WI 53208

REVISIONS:

DATE: 02/22/2011

PROJECT: W0114-11415

SITE NO: 784

BUILDING NO: 75

A201 -Alt

P:\2011 20821112082 O'Donnell Parking Structure\3-Drawings\A200 -Alt.dwg

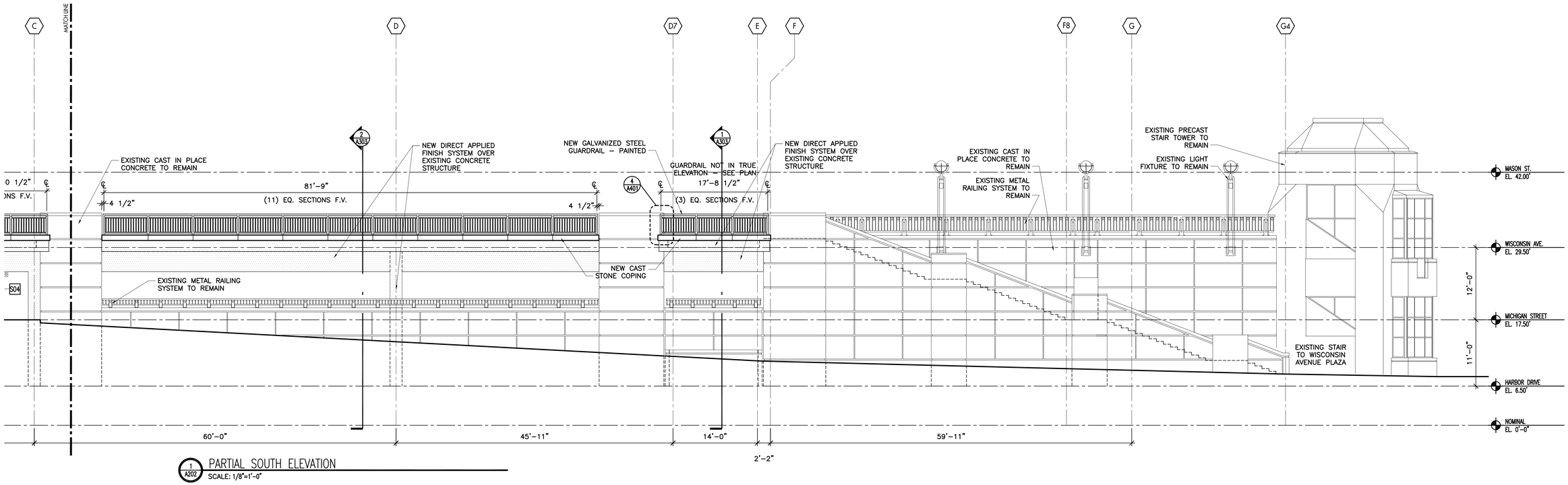

1 A202 PARTIAL SOUTH ELEVATION
SCALE: 1/8"=1'–0"

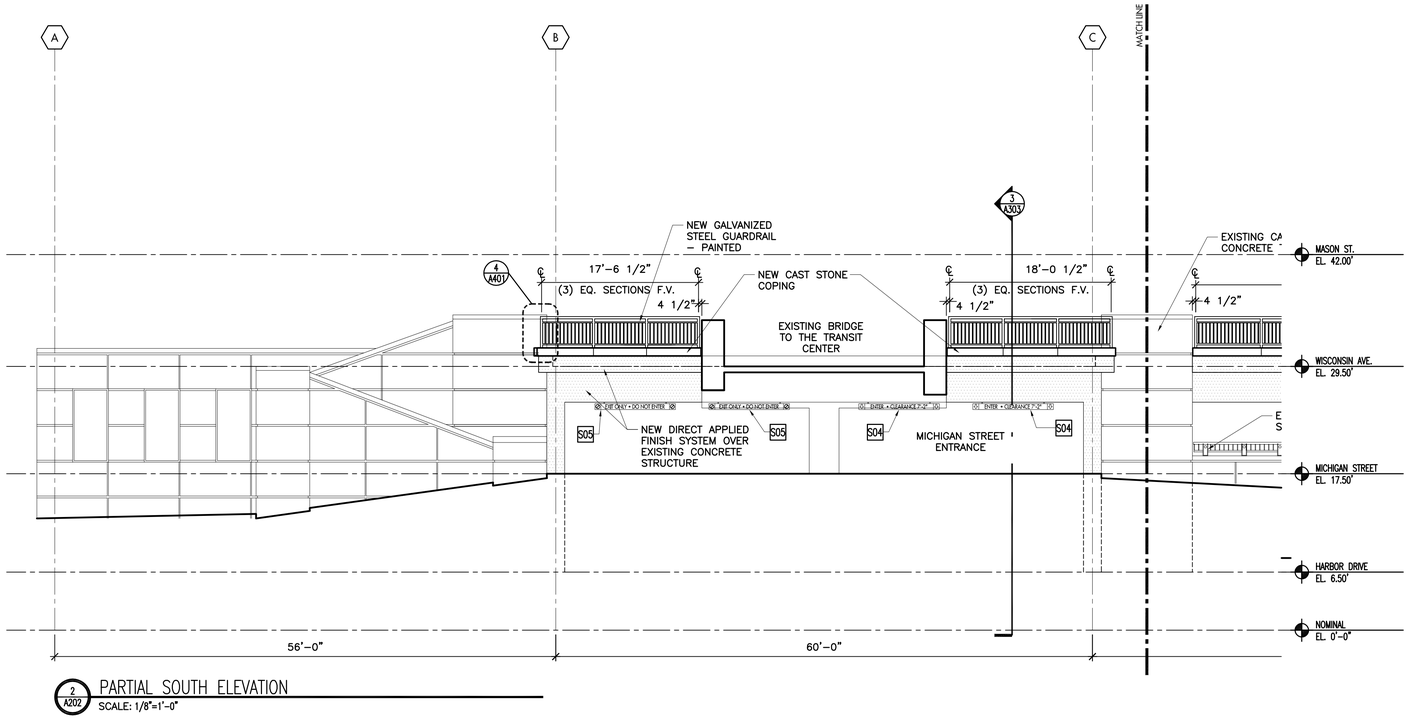

2 A202 PARTIAL SOUTH ELEVATION
SCALE: 1/8"=1'–0"

P:\2011 2082112082 O'Donnell Parking Structure\3-Drawings\A200.dwg

Department of Parks, Recreation and Culture

O'Donnell Park: Parking Structure Facade Improvements

910 East Michigan Street, Milwaukee, Wisconsin 53202-5607

MILWAUKEE COUNTY DEPARTMENT OF TRANSPORTATION AND PUBLIC WORKS
CITY CAMPUS 2711 W. WELLS ST - 2ND FLOOR MILWAUKEE, WI 53208

REVISIONS:

DATE: 02/22/2011

PROJECT: W0114-11415

SITE NO: 784

BUILDING NO: 75

EXTERIOR ELEVATIONS

A202

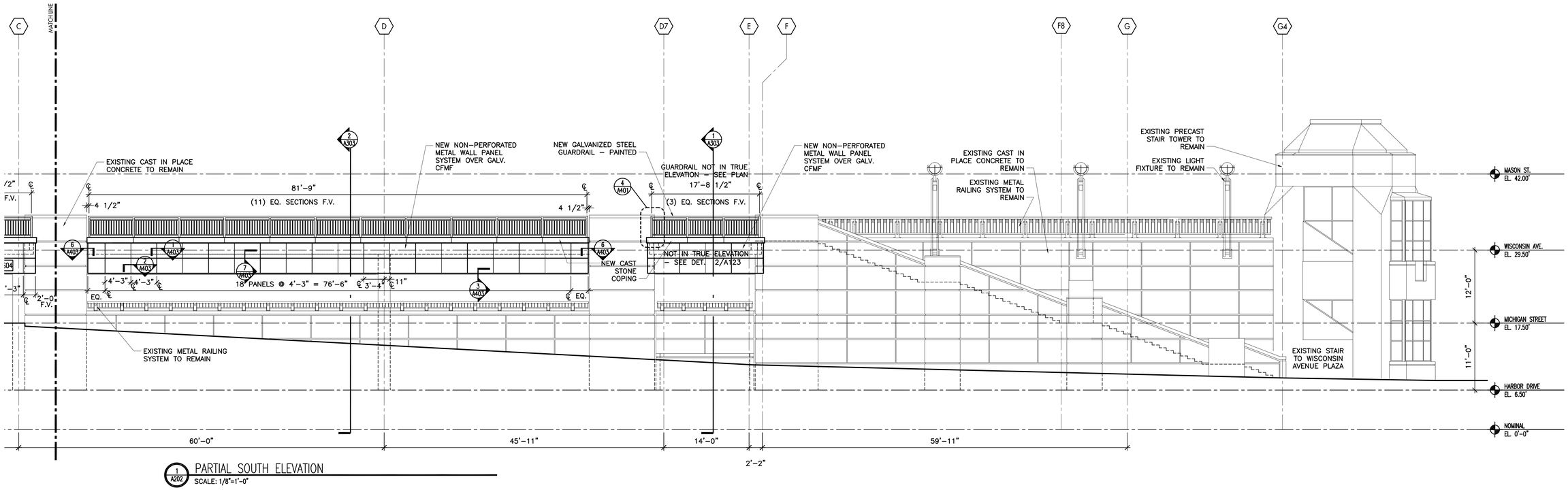

1 A202 PARTIAL SOUTH ELEVATION
SCALE: 1/8"=1'–0"

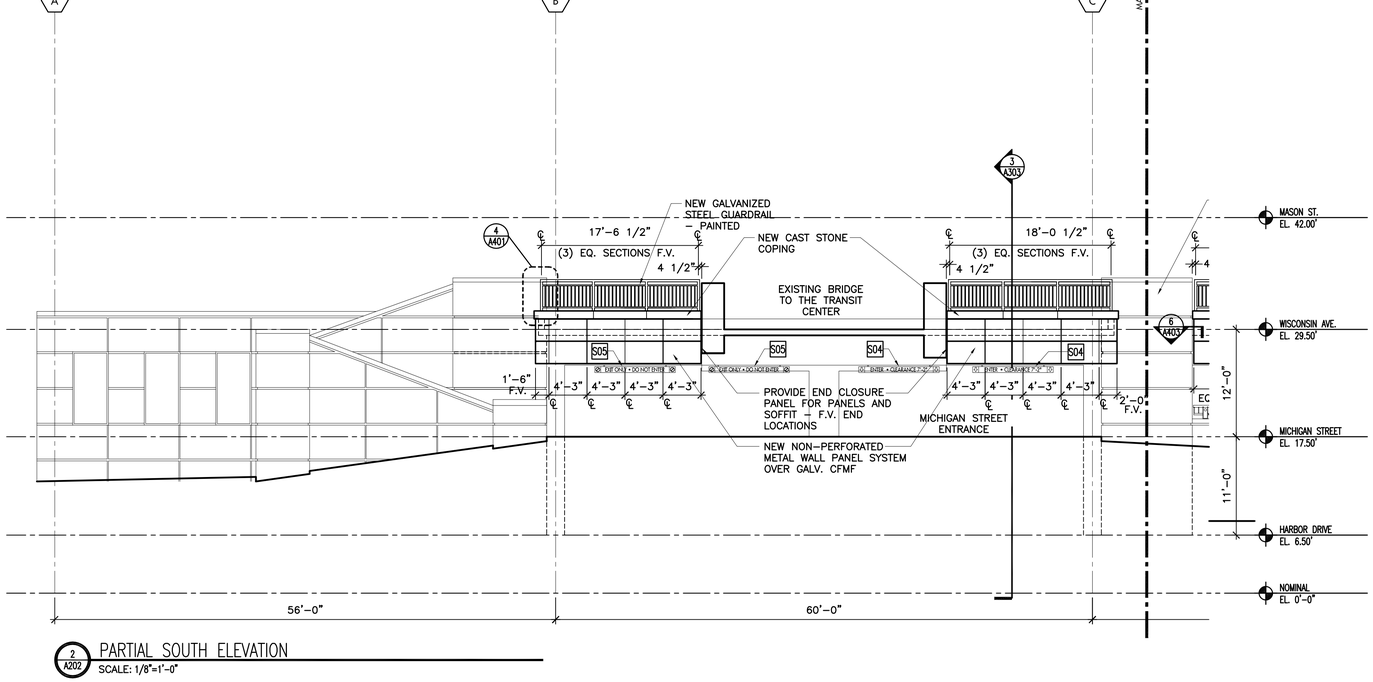

2 A202 PARTIAL SOUTH ELEVATION
SCALE: 1/8"=1'–0"

GENERAL NOTES

1 – ALL EXISTING CONDITIONS AND DIMENSIONS TO BE FIELD VERIFIED

2 – METAL PANEL JOINTS AT OVERHANG TO ALIGN WITH PANELS BELOW UNLESS NOTED ON DRAWINGS

3 – XXX SEE SIGN SCHEDULE A401

EXTERIOR ELEVATIONS

Department of Parks, Recreation and Culture

O'Donnell Park: Parking Structure Facade Improvements

910 East Michigan Street, Milwaukee, Wisconsin 53202-5607

MILWAUKEE COUNTY DEPARTMENT OF TRANSPORTATION AND PUBLIC WORKS

CITY CAMPUS 2711 W. WELLS ST - 2ND FLOOR MILWAUKEE, WI 53208

REVISIONS:

DATE: **02/22/2011**

PROJECT: **W0114-11415**

SITE NO: **784**

BUILDING NO: **75**

A202 -Alt

P:\2011 2082111120820 O'Donnell Parking Structure\3-Drawings\A200 -Alt.dwg

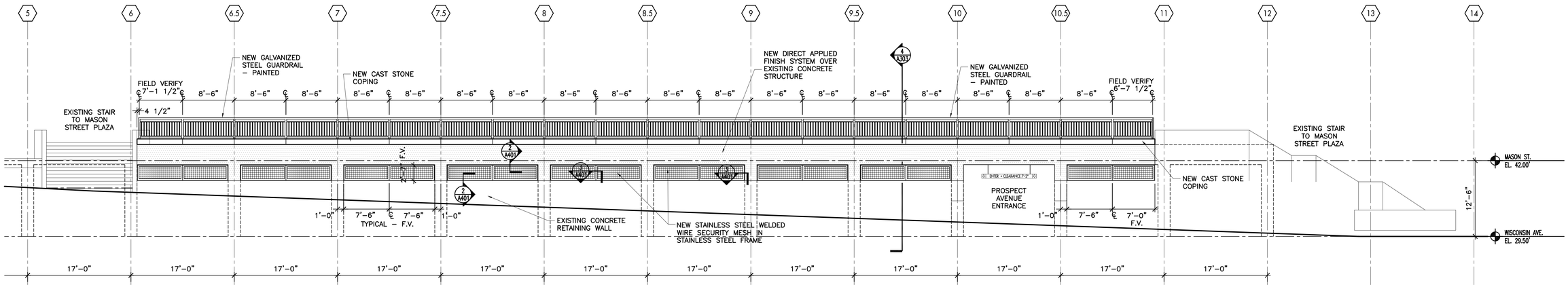

1 A203 WEST ELEVATION
SCALE: 1/8"=1'-0"

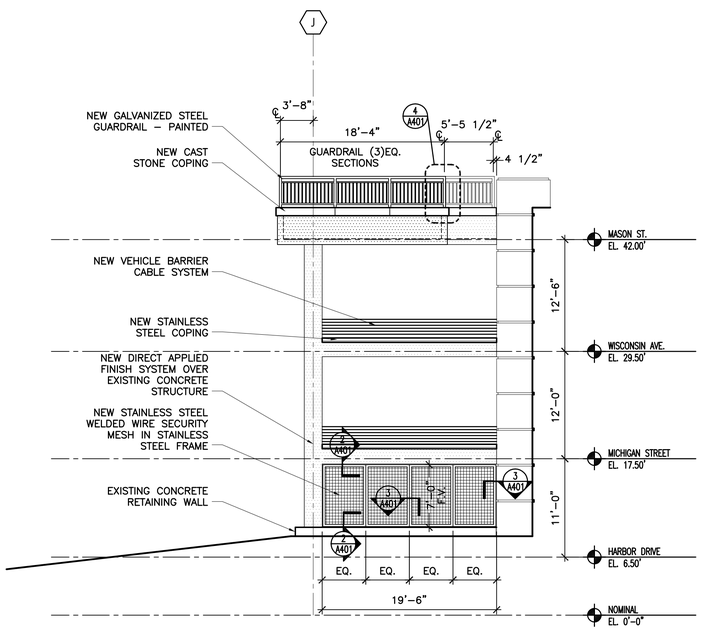

2 A203 NORTH ELEVATION
SCALE: 1/8"=1'-0"

P:\2011 2082\1112082 O'Donnell Parking Structure\3-Drawings\A200.dwg

Department of Parks, Recreation and Culture

O'Donnell Park: Parking Structure Facade Improvements

910 East Michigan Street, Milwaukee, Wisconsin 53202-5607

MILWAUKEE COUNTY DEPARTMENT OF TRANSPORTATION AND PUBLIC WORKS
CITY CAMPUS 2711 W. WELLS ST - 2ND FLOOR MILWAUKEE, WI 53208

REVISIONS:

DATE: **02/22/2011**

PROJECT: **W0114-11415**

SITE NO: **784**

BUILDING NO: **75**

EXTERIOR ELEVATIONS

A203

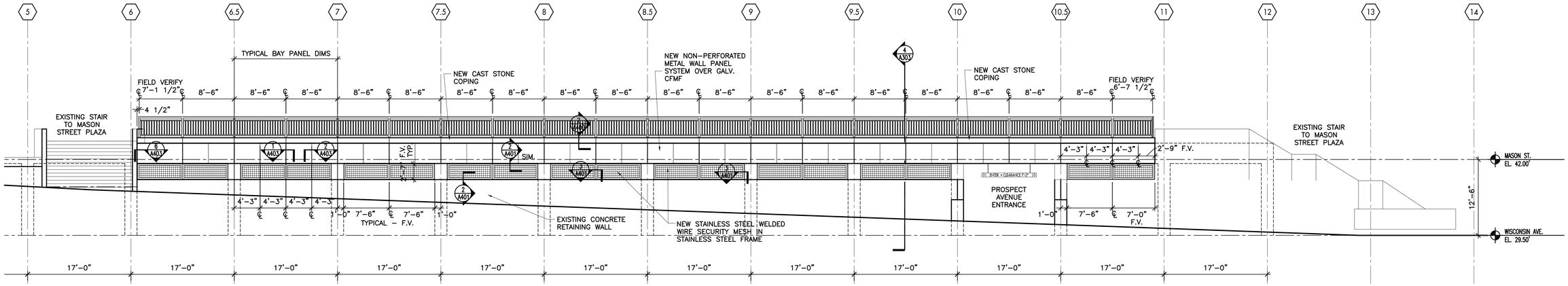

1 A203 WEST ELEVATION
SCALE: 1/8"=1'-0"

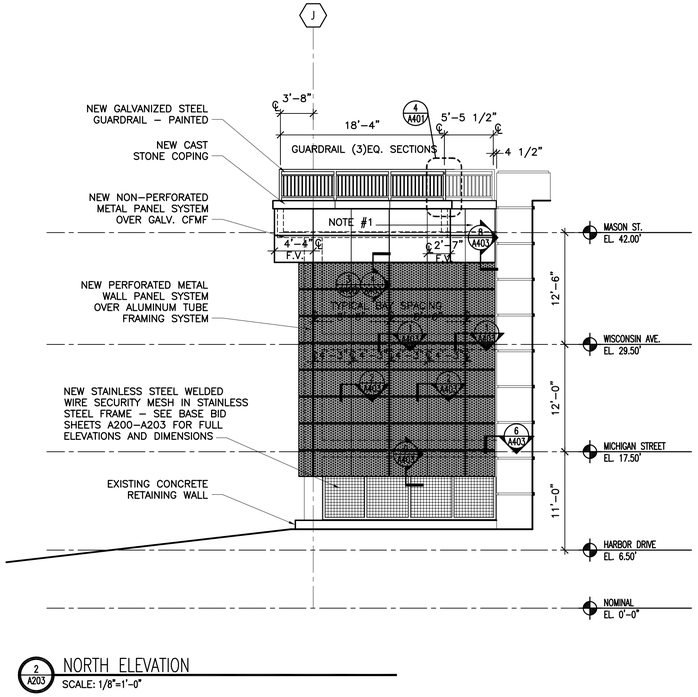

2 A203 NORTH ELEVATION
SCALE: 1/8"=1'-0"

GENERAL NOTES

1 – ALL EXISTING CONDITIONS AND DIMENSIONS TO BE FIELD VERIFIED

2 – METAL PANEL JOINTS AT OVERHANG TO ALIGN WITH PANELS BELOW UNLESS NOTED ON DRAWINGS

3 – [xxx] SEE SIGN SCHEDULE A401

EXTERIOR ELEVATIONS

Department of Parks, Recreation and Culture

O'Donnell Park: Parking Structure Facade Improvements

910 East Michigan Street, Milwaukee, Wisconsin 53202-5607

MILWAUKEE COUNTY DEPARTMENT OF TRANSPORTATION AND PUBLIC WORKS
CITY CAMPUS 2711 W. WELLS ST - 2ND FLOOR MILWAUKEE, WI 53208

REVISIONS:

DATE: **02/22/2011**

PROJECT: **W0114-11415**

SITE NO: **784**

BUILDING NO: **75**

A203 -Alt

P:\2011 2082\1112082 O'Donnell Parking Structure\3-Drawings\A200 -Alt.dwg

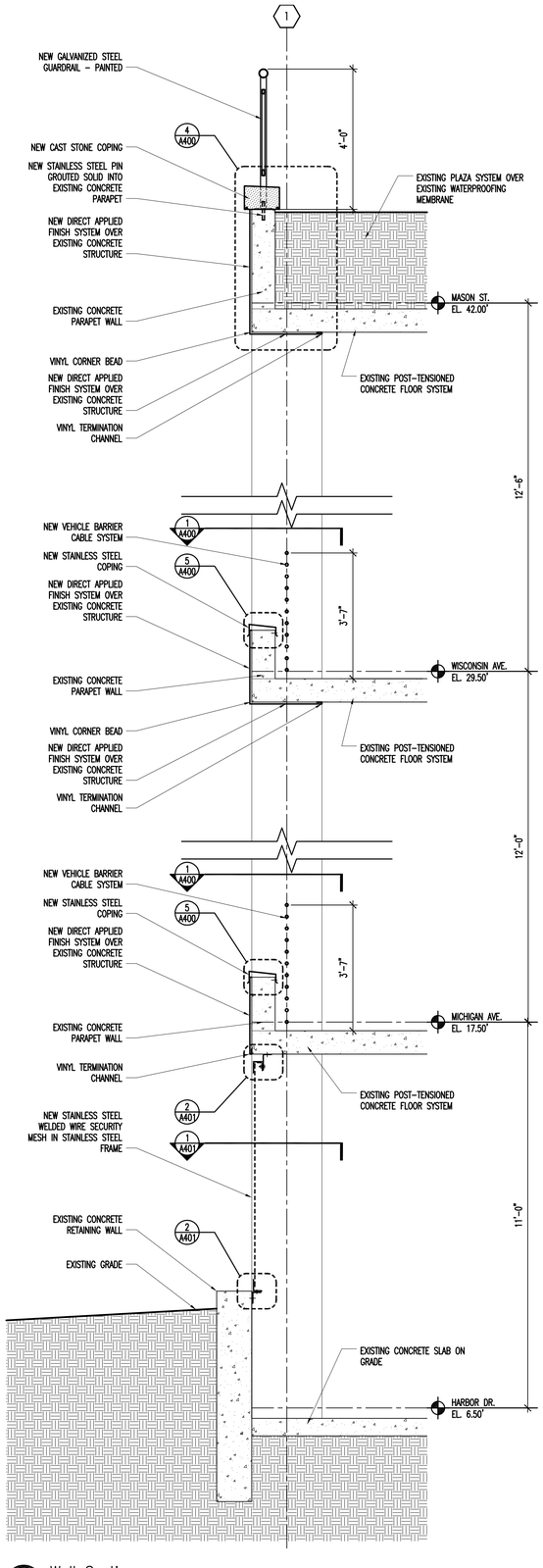

1 A300 Wall Section
SCALE: 1/2"=1'-0"

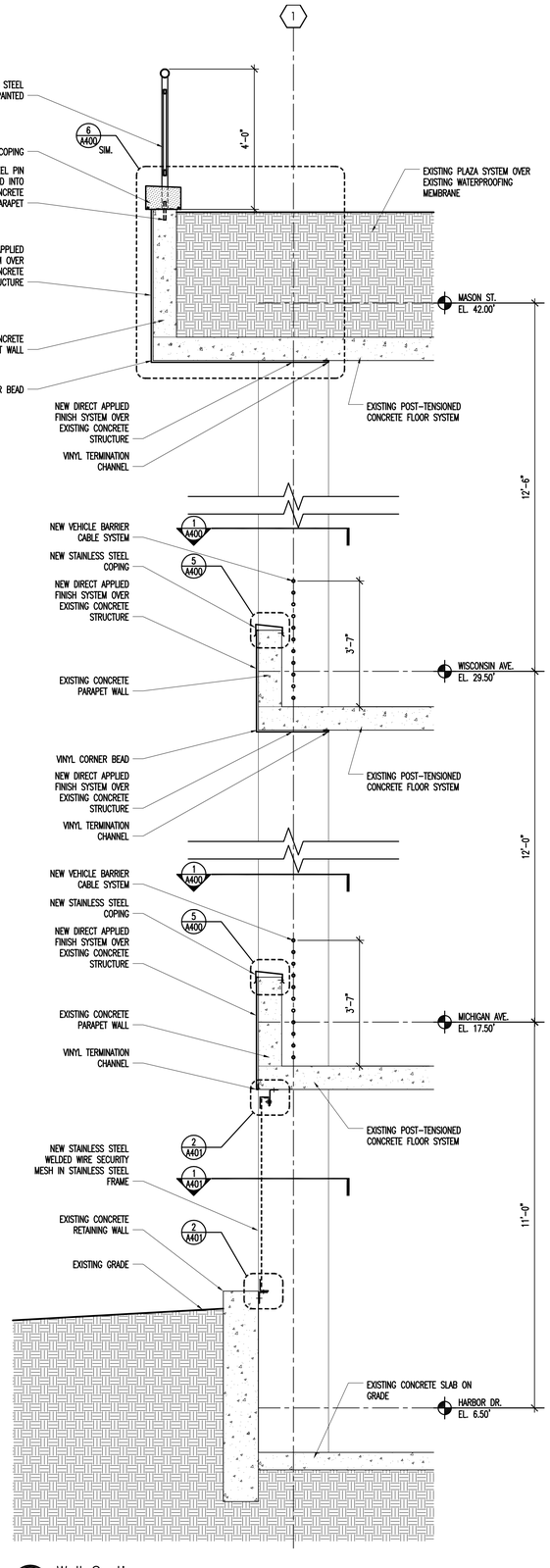

2 A300 Wall Section
SCALE: 1/2"=1'-0"

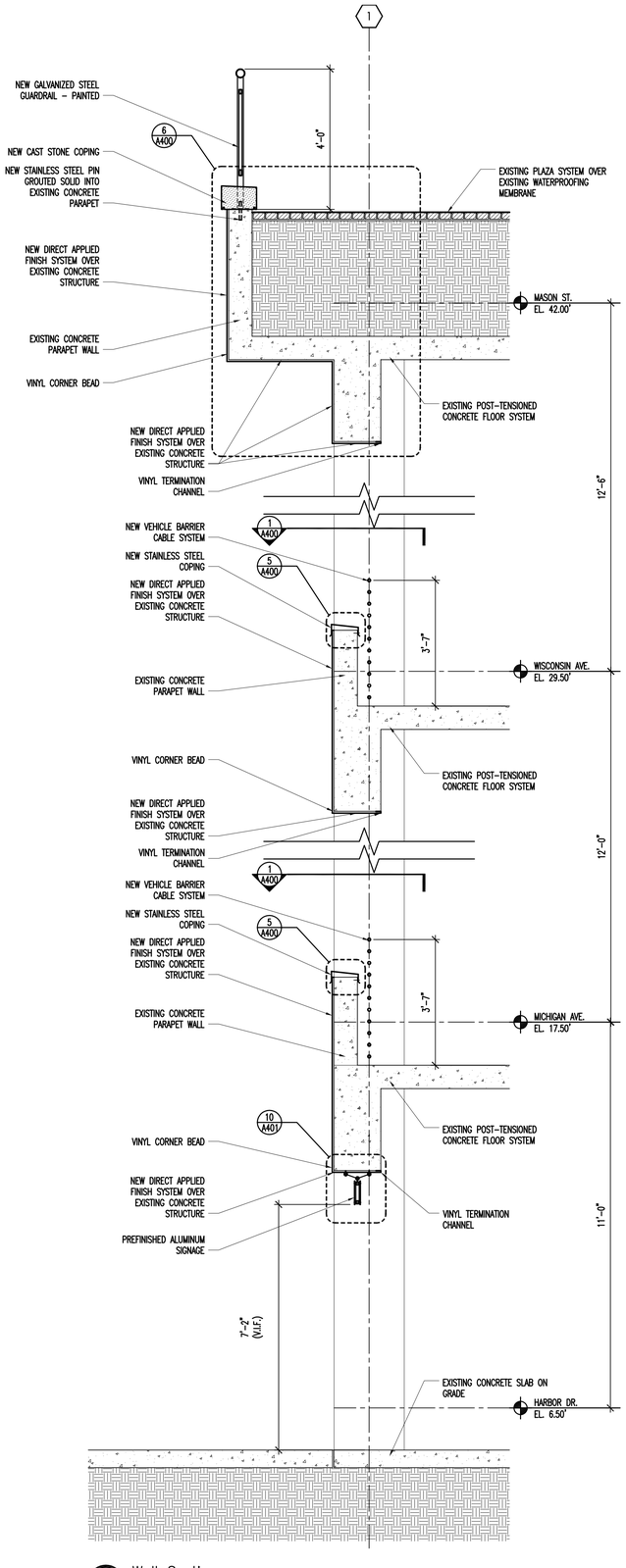

3 A300 Wall Section
SCALE: 1/2"=1'-0"

WALL SECTIONS

P:\2011 2082\112082 O'Donnell Parking Structure\3-Drawings\A300.dwg

Department of Parks, Recreation and Culture

O'Donnell Park: Parking Structure Facade Improvements

910 East Michigan Street, Milwaukee, Wisconsin 53202-5607

MILWAUKEE COUNTY DEPARTMENT OF TRANSPORTATION AND PUBLIC WORKS

CITY CAMPUS 2711 W. WELLS ST - 2ND FLOOR MILWAUKEE, WI 53208

REVISIONS:

DATE: 02/22/2011

PROJECT: W0114-11415

SITE NO: 784

BUILDING NO: 75

A300

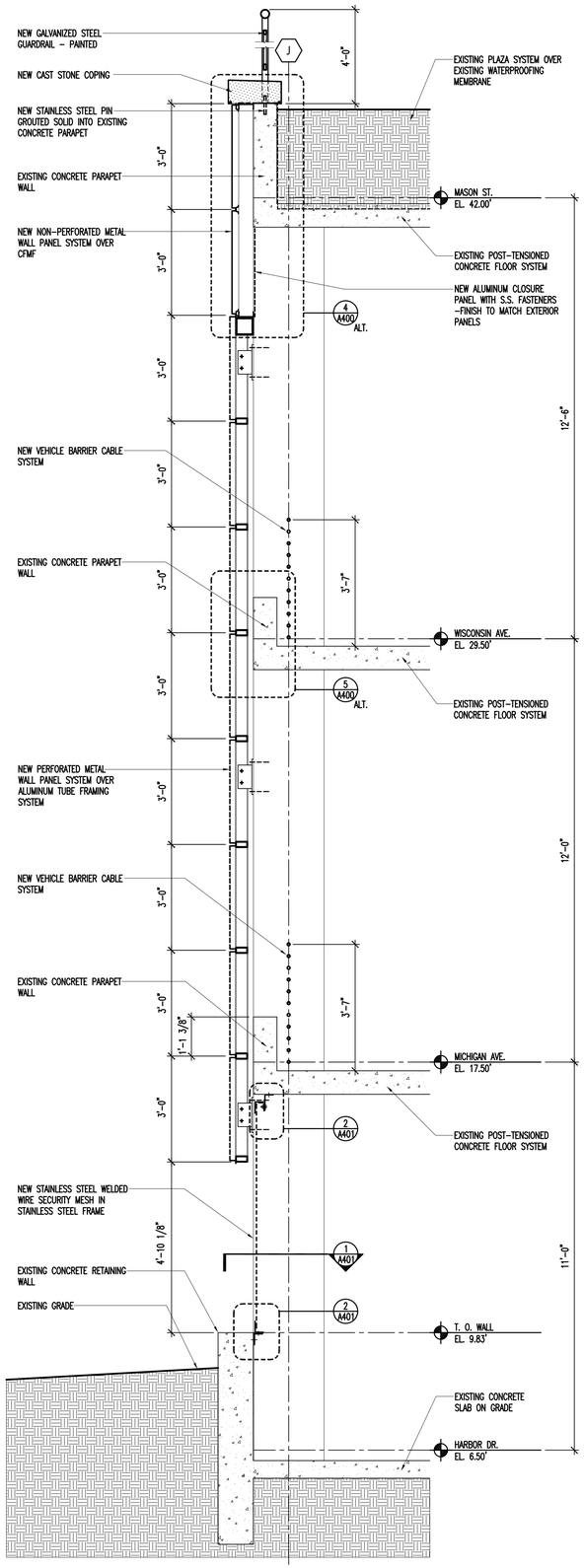

1 A300 Wall Section
SCALE: 1/2"=1'-0"

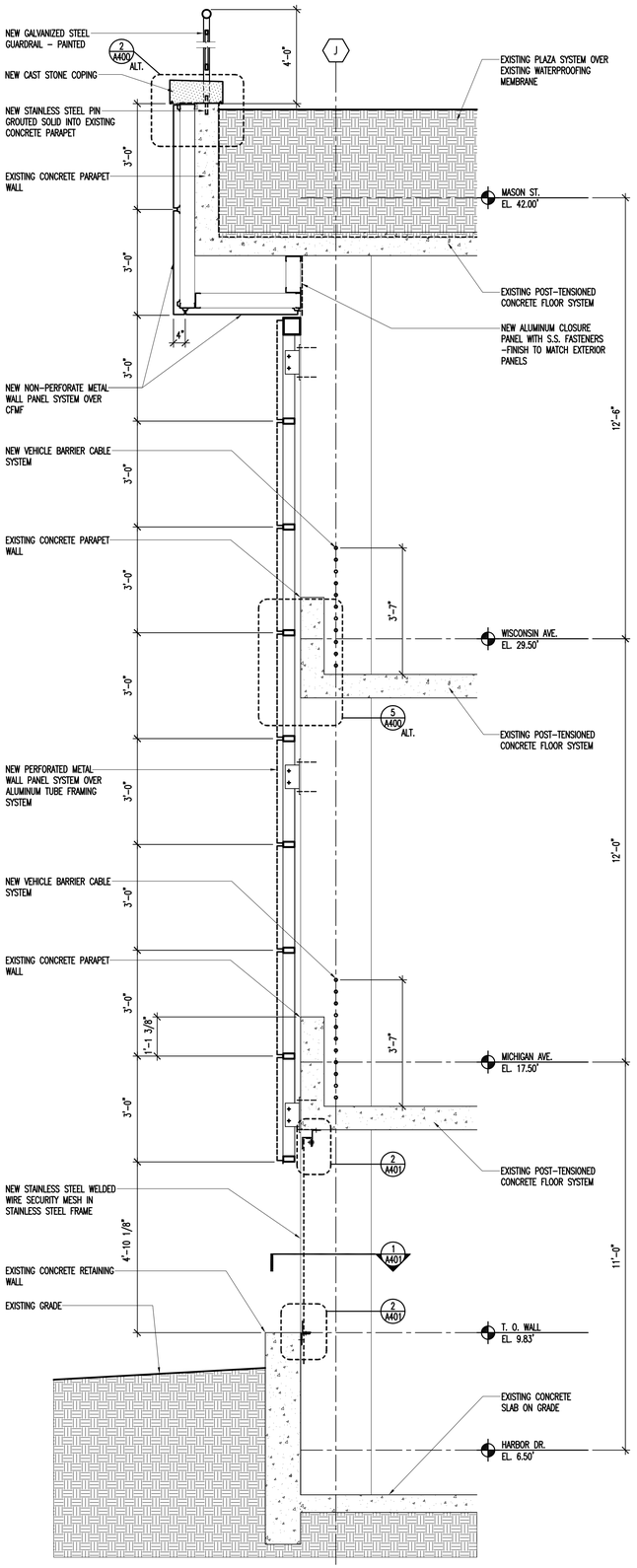

2 A300 Wall Section
SCALE: 1/2"=1'-0"

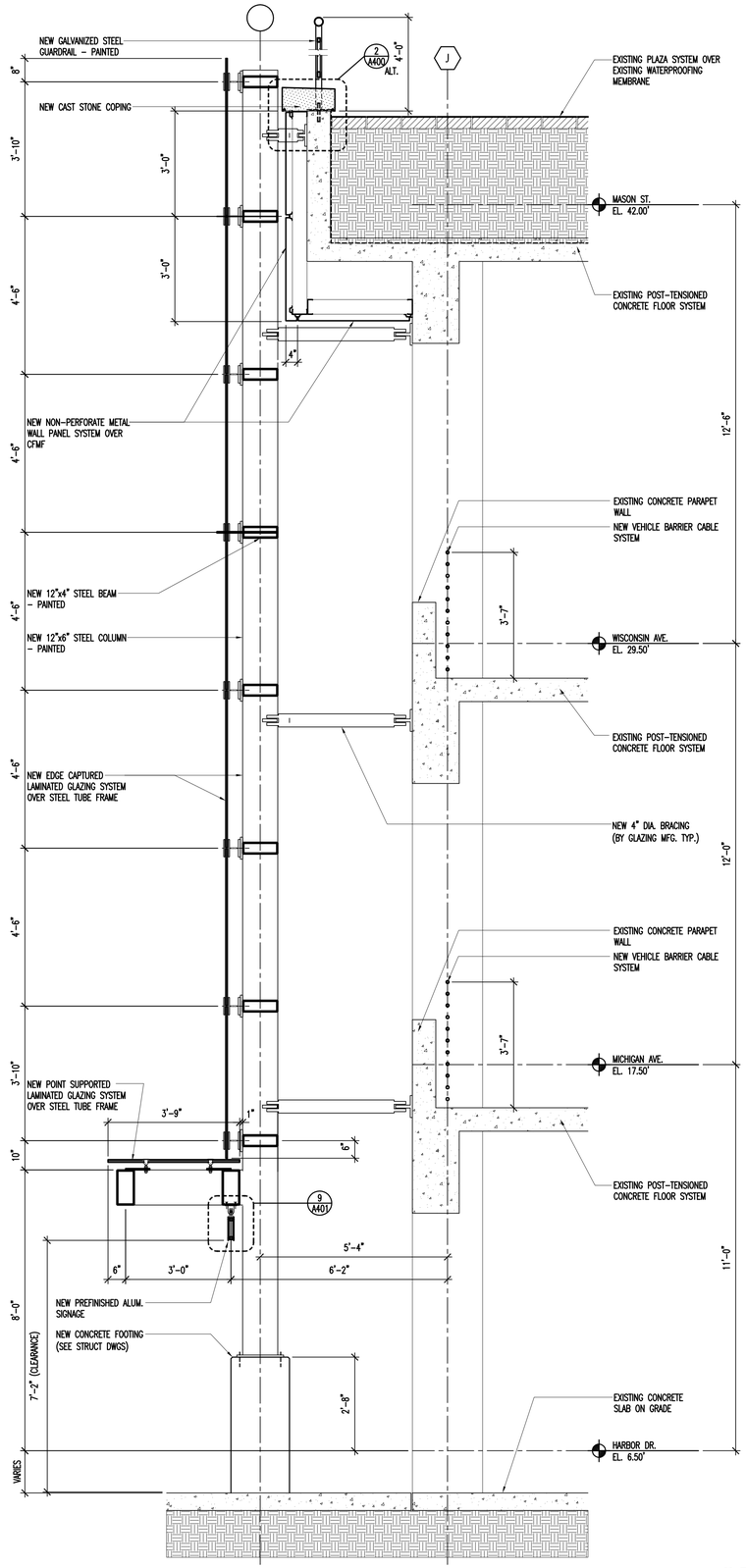

3 A300 Wall Section
SCALE: 1/2"=1'-0"

WALL SECTIONS

Department of Parks, Recreation and Culture
O'Donnell Park: Parking Structure Facade Improvements
910 East Michigan Street, Milwaukee, Wisconsin 53202-5607

MILWAUKEE COUNTY DEPARTMENT OF TRANSPORTATION AND PUBLIC WORKS
CITY CAMPUS 2711 W. WELLS ST. - 2ND FLOOR MILWAUKEE, WI 53208

REVISIONS:

DATE: 02/22/2011
PROJECT: W0114-11415
SITE NO: 784
BUILDING NO: 75

A300 -Alt

P:\2011 2082\112082 O'Donnell Parking Structure\3-Drawings\A300-Alt.dwg

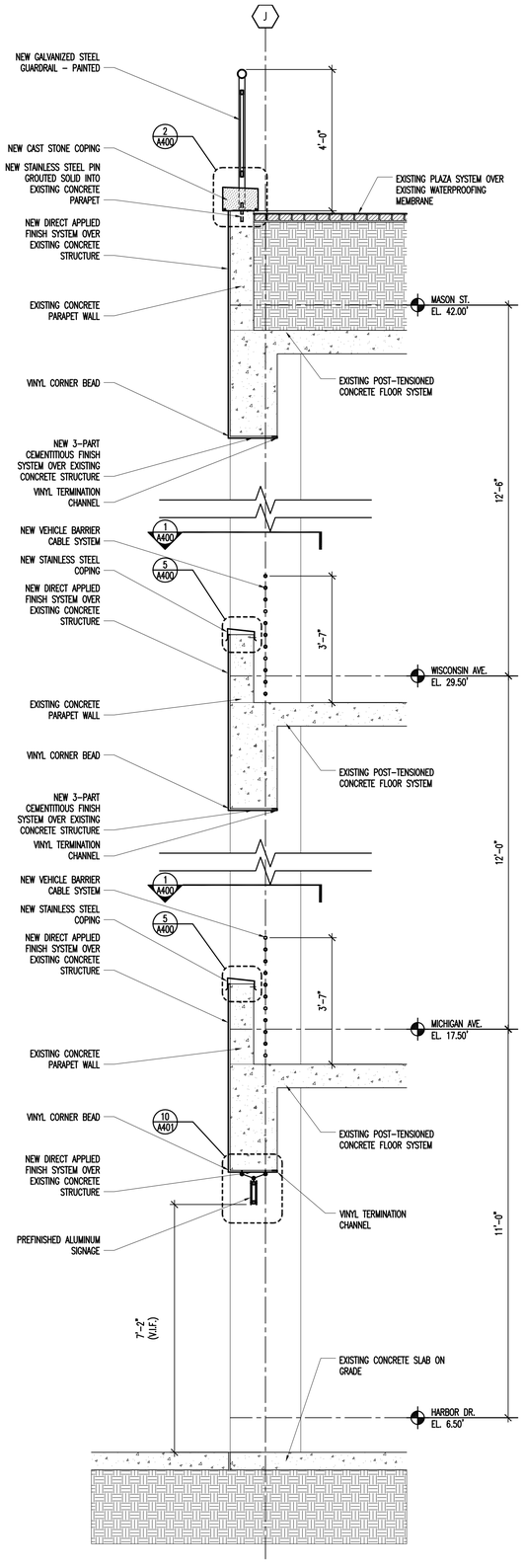

1 A301 Wall Section
SCALE: 1/2"=1'-0"

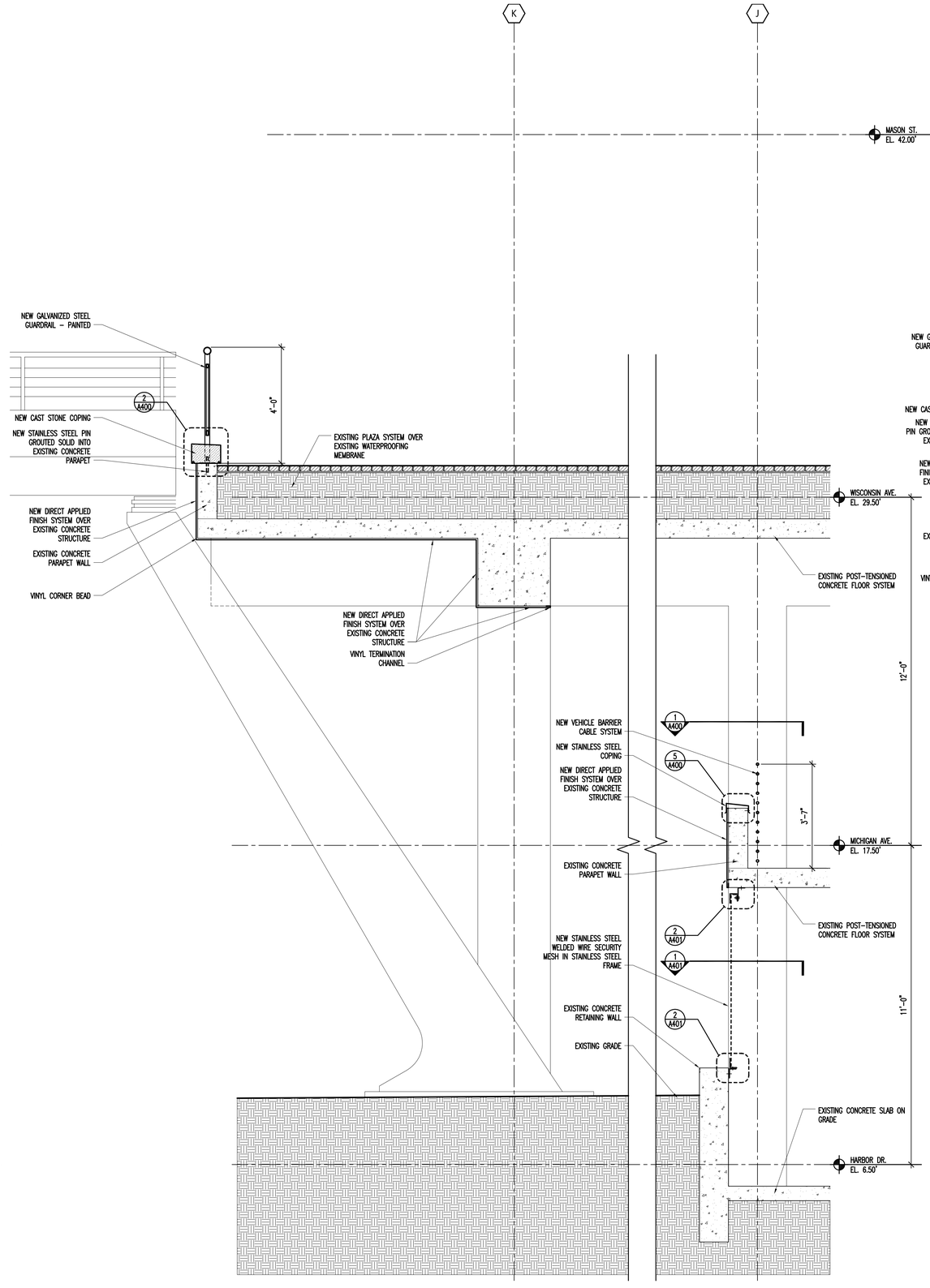

2 A301 Wall Section
SCALE: 1/2"=1'-0"

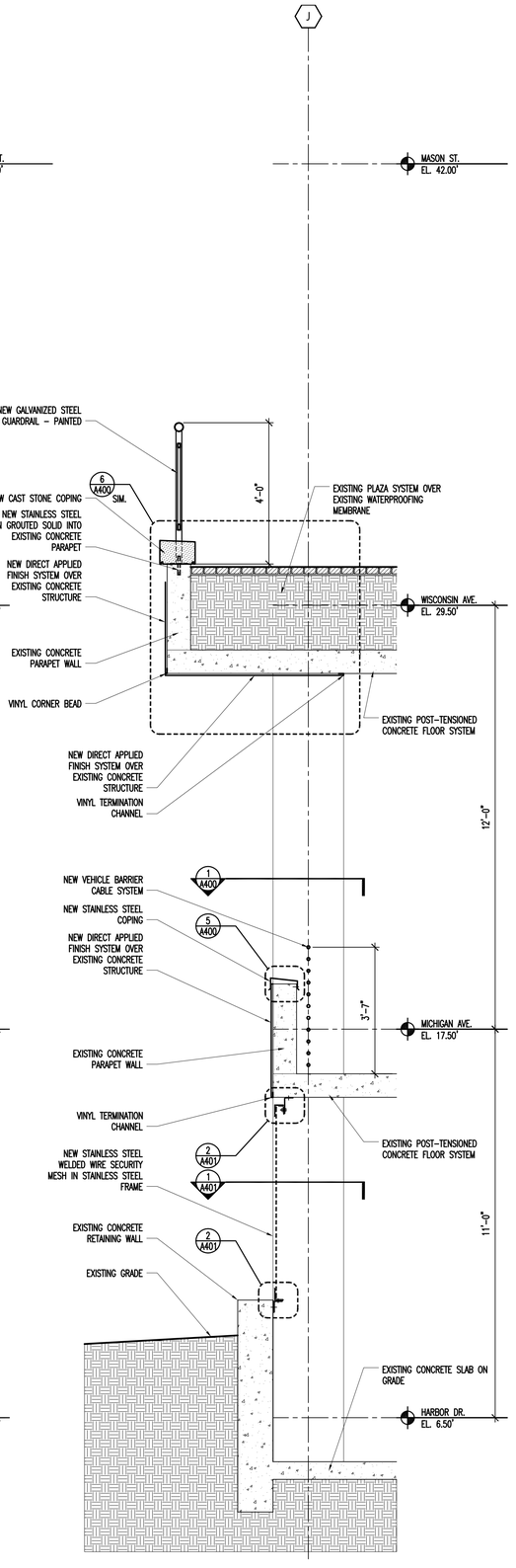

3 A301 Wall Section
SCALE: 1/2"=1'-0"

WALL SECTIONS

P:\2011 2082\112082 O'Donnell Parking Structure\3-Drawings\A301.dwg

Department of Parks, Recreation and Culture

O'Donnell Park: Parking Structure Facade Improvements

910 East Michigan Street, Milwaukee, Wisconsin 53202-5607

MILWAUKEE COUNTY DEPARTMENT OF TRANSPORTATION AND PUBLIC WORKS

CITY CAMPUS 2711 W. WELLS ST - 2ND FLOOR MILWAUKEE, WI 53208

REVISIONS:

DATE: 02/22/2011

PROJECT: W0114-11415

SITE NO: 784

BUILDING NO: 75

A301

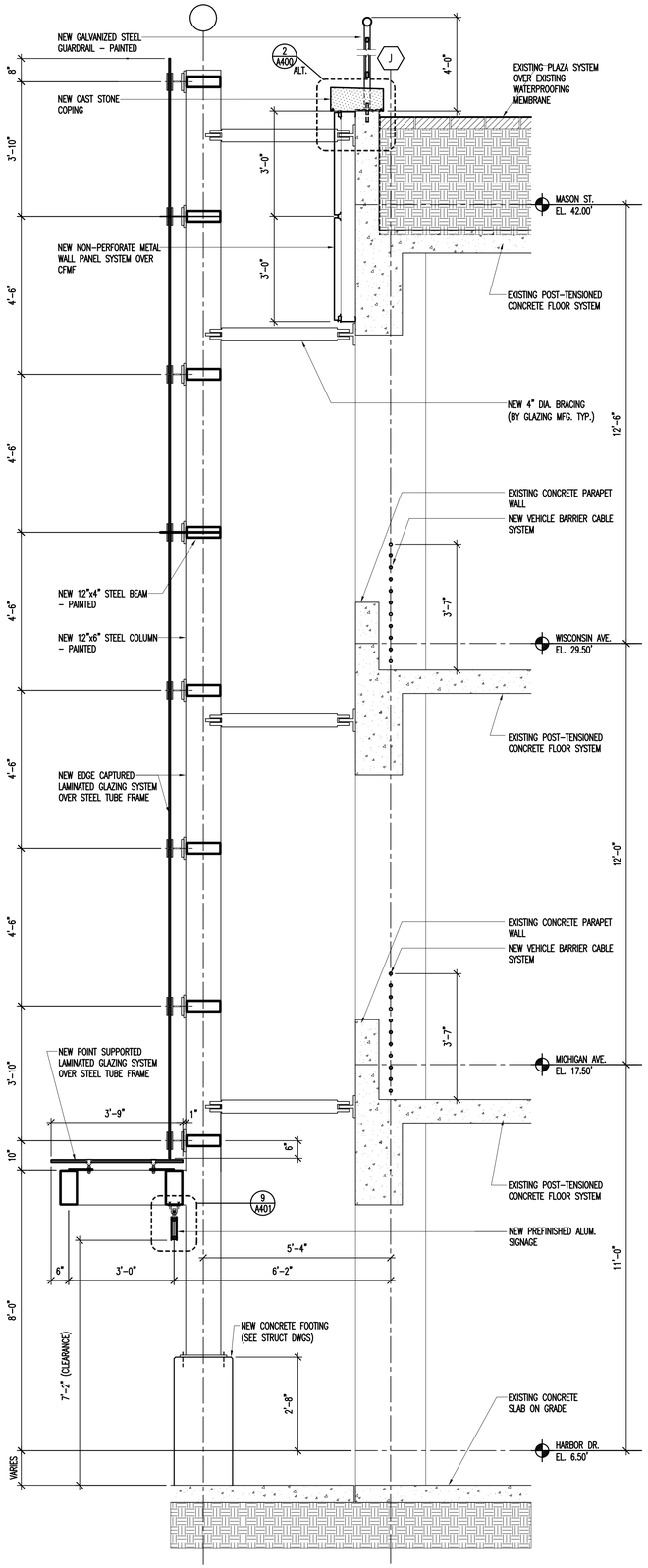

1 A301 Wall Section
SCALE: 1/2"=1'-0"

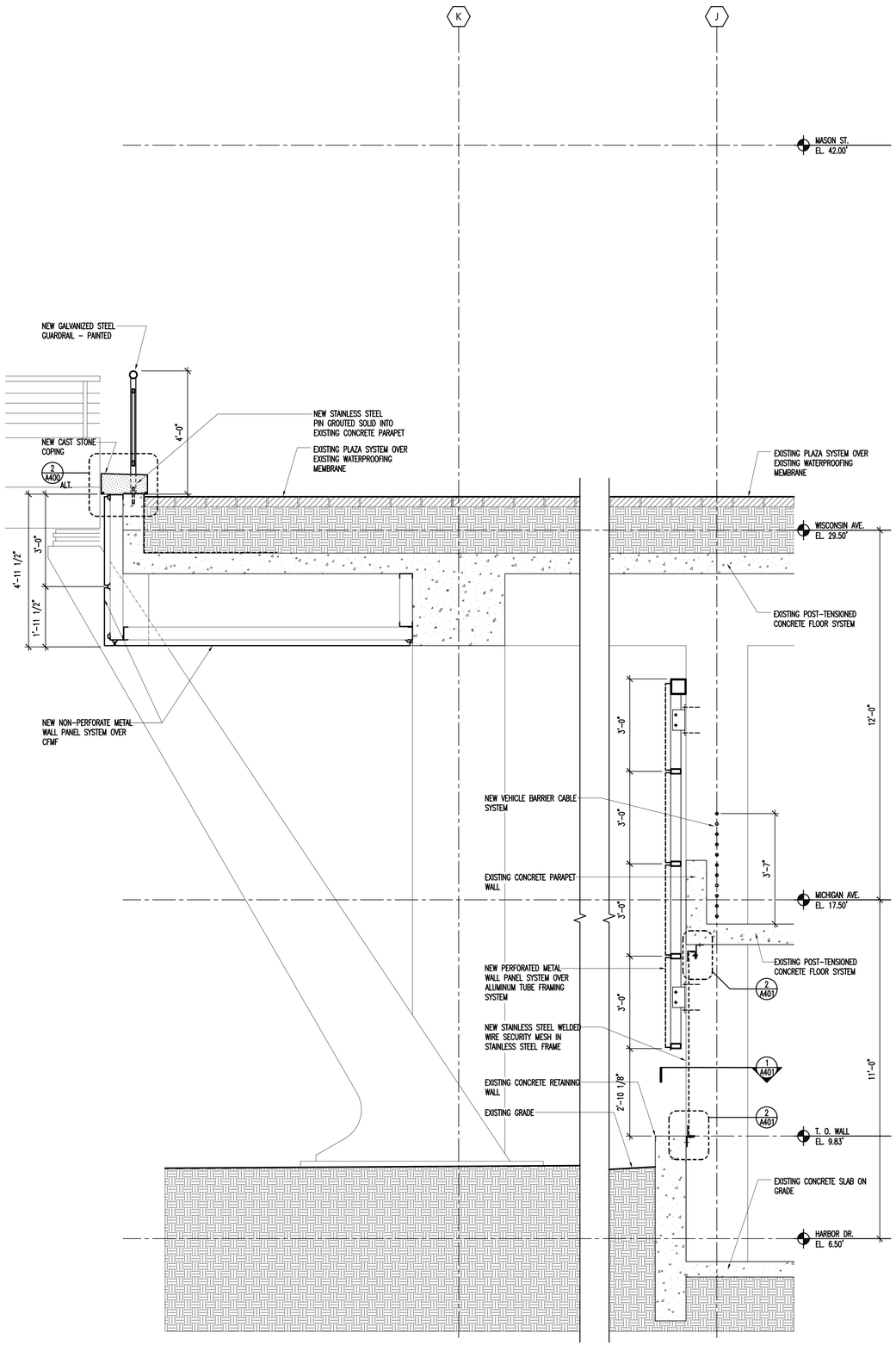

2 A301 Wall Section
SCALE: 1/2"=1'-0"

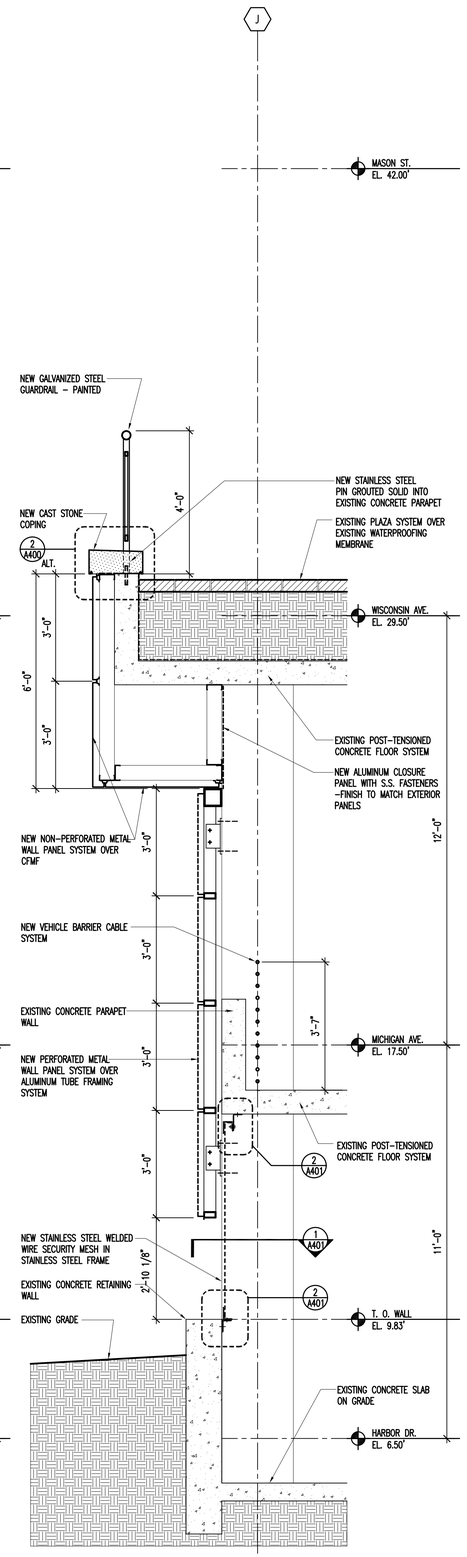

3 A301 Wall Section
SCALE: 1/2"=1'-0"

WALL SECTIONS

P:\2011 2082\112082 O'Donnell Parking Structure\3-Drawings\A300-Alt.dwg

Department of Parks, Recreation and Culture

O'Donnell Park: Parking Structure Facade Improvements

910 East Michigan Street, Milwaukee, Wisconsin 53202-5607

MILWAUKEE COUNTY DEPARTMENT OF TRANSPORTATION AND PUBLIC WORKS

CITY CAMPUS 2711 W. WELLS ST - 2ND FLOOR MILWAUKEE, WI 53208

REVISIONS:

DATE: 02/22/2011

PROJECT: W0114-11415

SITE NO: 784

BUILDING NO: 75

A301 -Alt

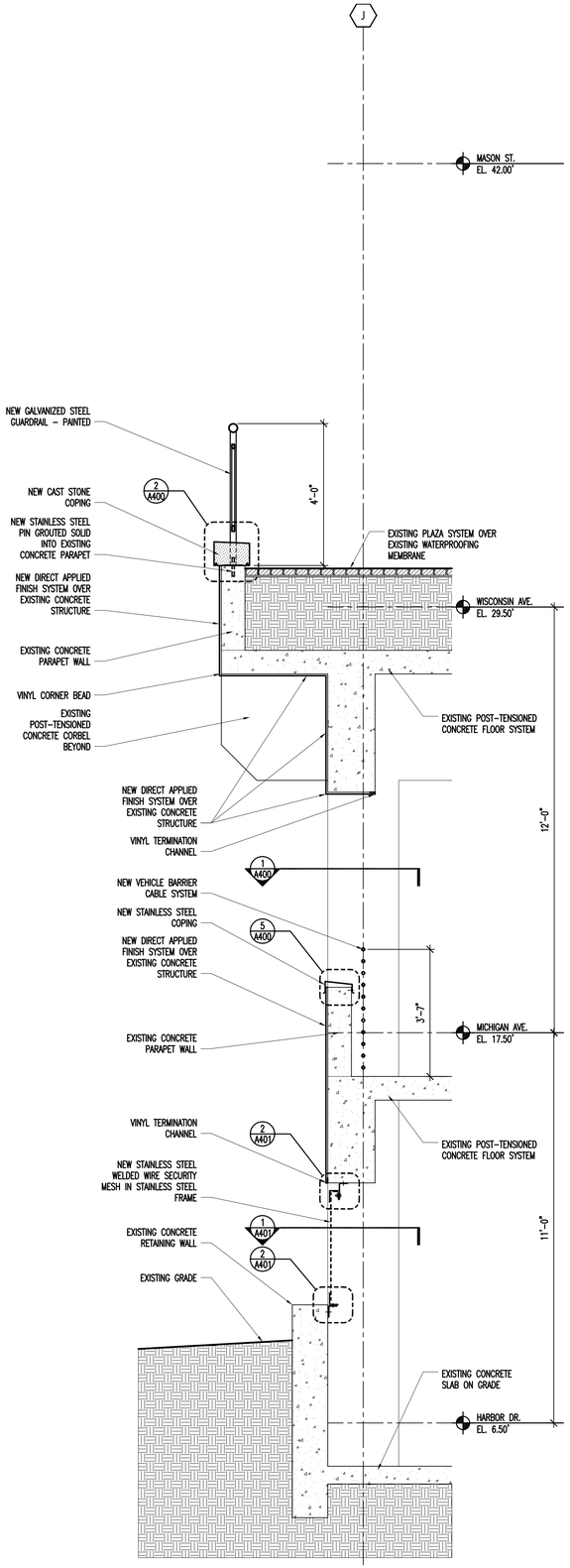

1 A302 Wall Section
SCALE: 1/2"=1'-0"

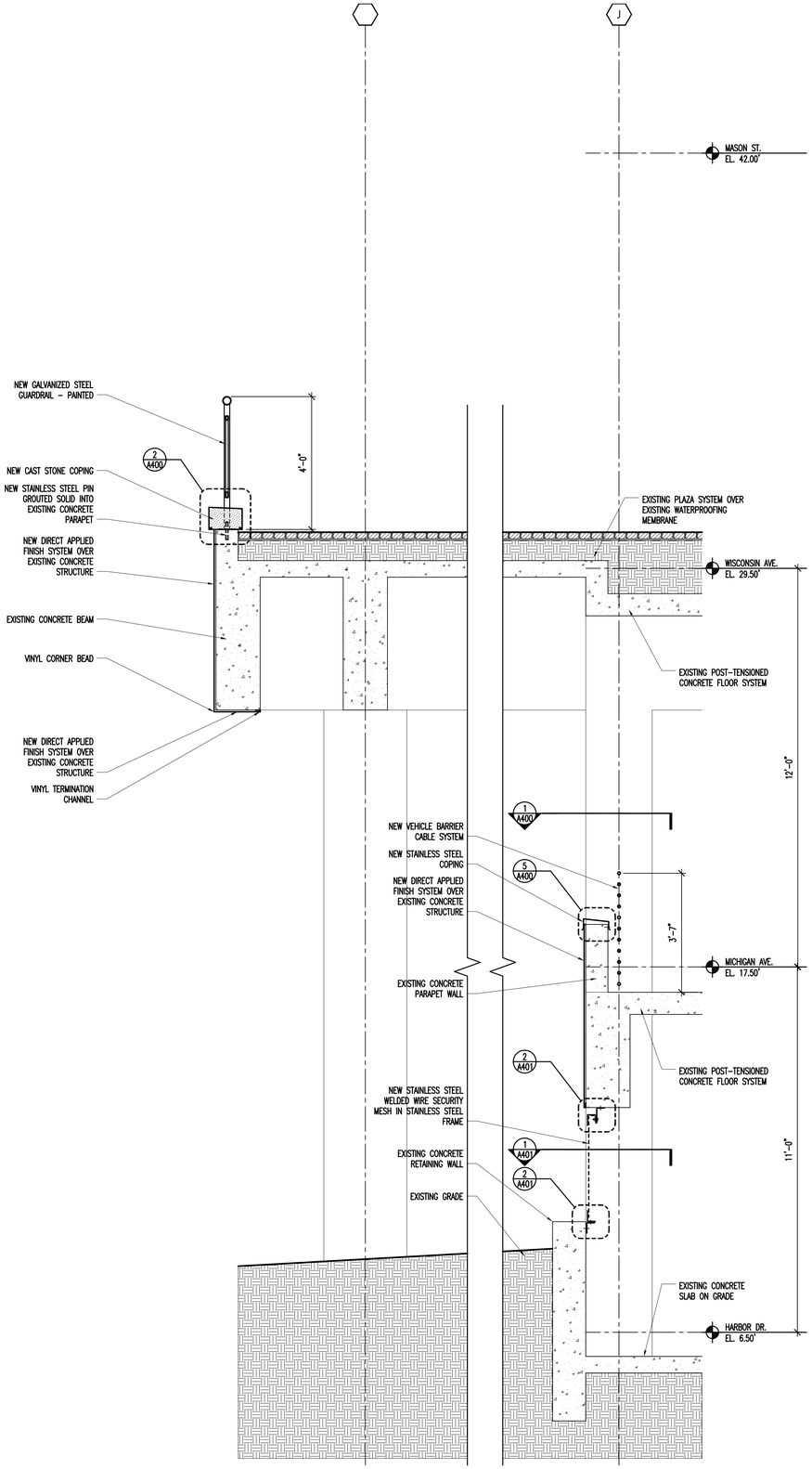

2 A302 Wall Section
SCALE: 1/2"=1'-0"

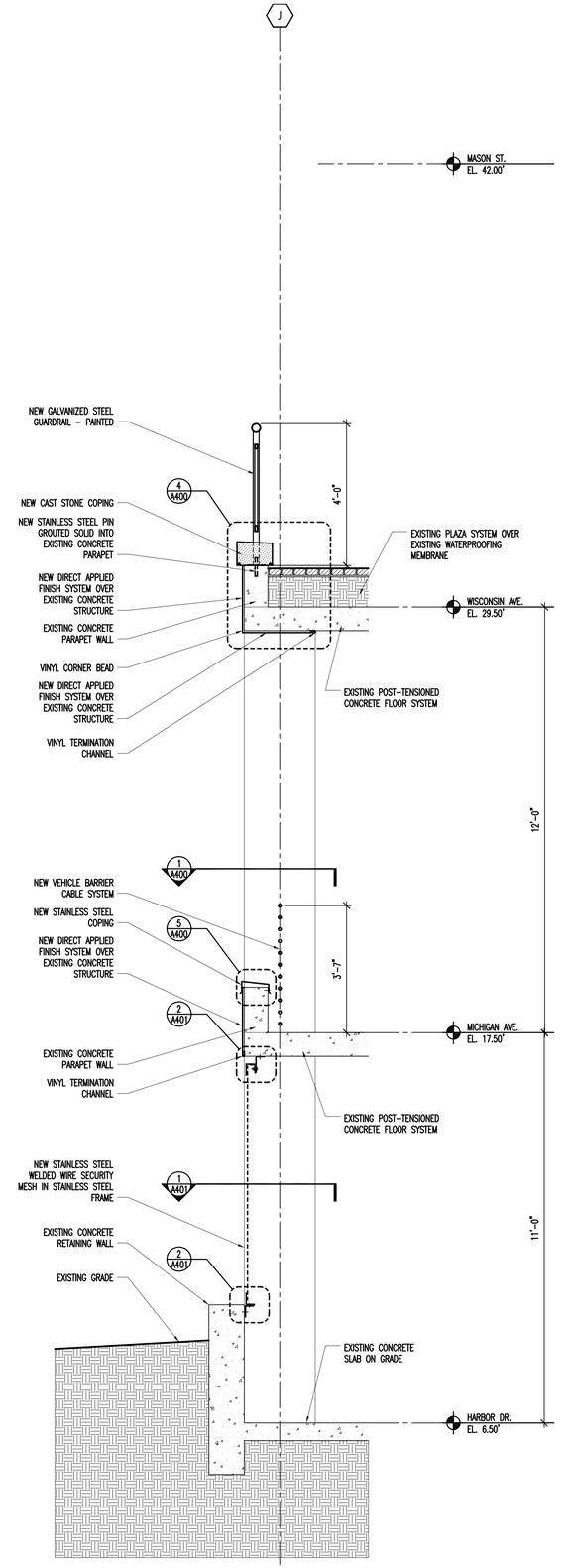

3 A302 Wall Section
SCALE: 1/2"=1'-0"

WALL SECTIONS

P:\2011 2082\112082 O'Donnell Parking Structure\3-Drawings\A302.dwg

Department of Parks, Recreation and Culture

O'Donnell Park: Parking Structure Facade Improvements

910 East Michigan Street, Milwaukee, Wisconsin 53202-5607

MILWAUKEE COUNTY DEPARTMENT OF TRANSPORTATION AND PUBLIC WORKS

CITY CAMPUS 2711 W. WELLS ST - 2ND FLOOR MILWAUKEE, WI 53208

REVISIONS:

DATE: **02/22/2011**

PROJECT: **W0114-11415**

SITE NO: **784**

BUILDING NO: **75**

A302

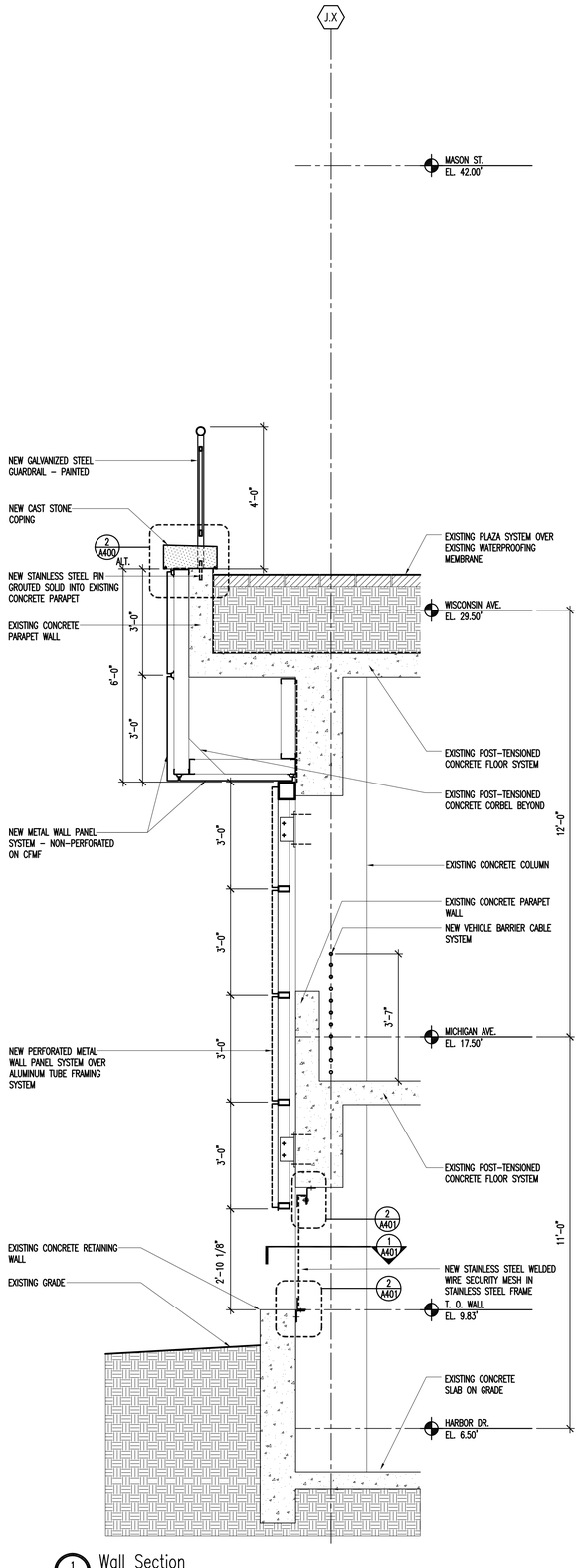

1 A302 Wall Section
SCALE: 1/2"=1'-0"

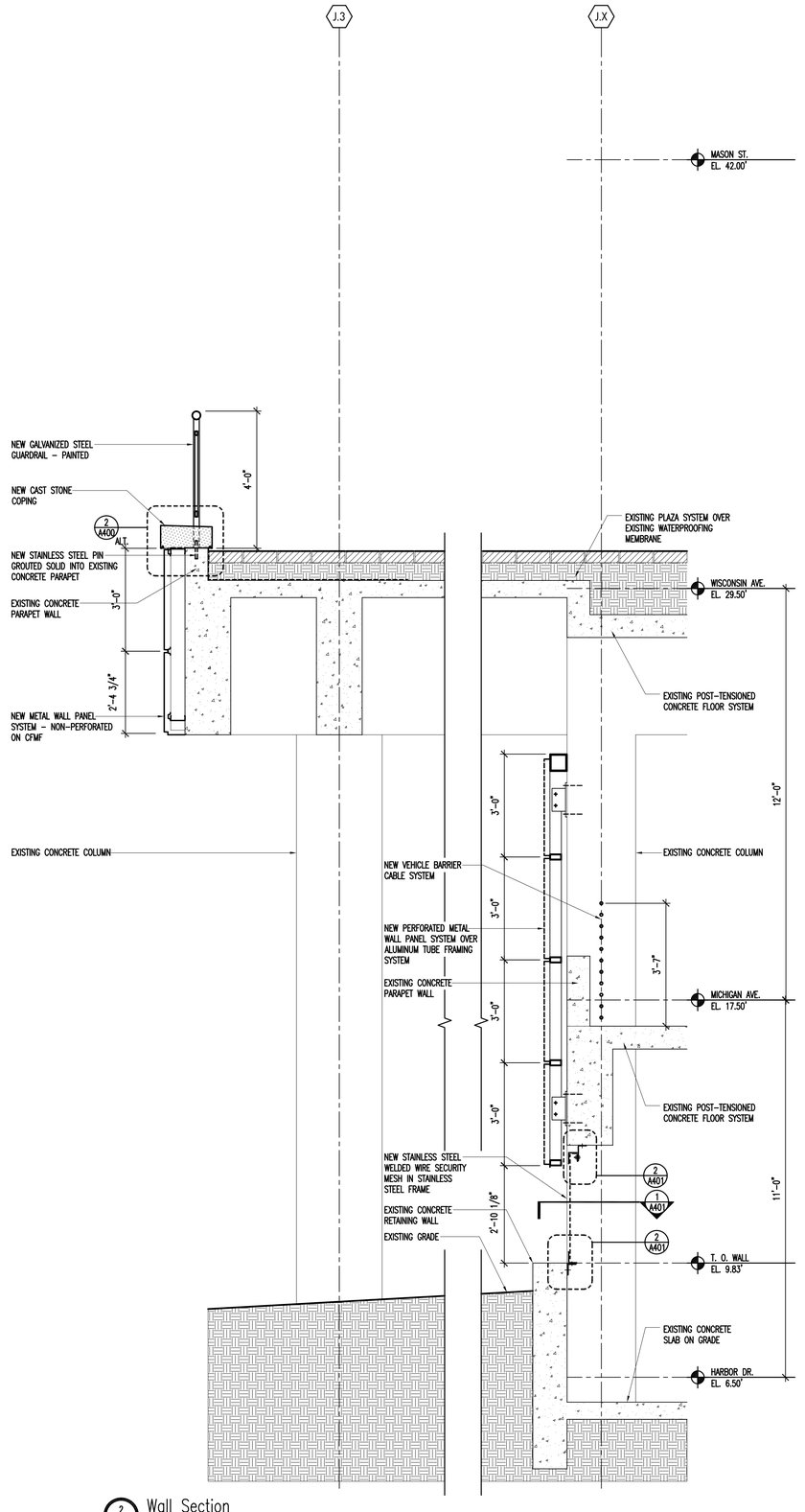

2 A302 Wall Section
SCALE: 1/2"=1'-0"

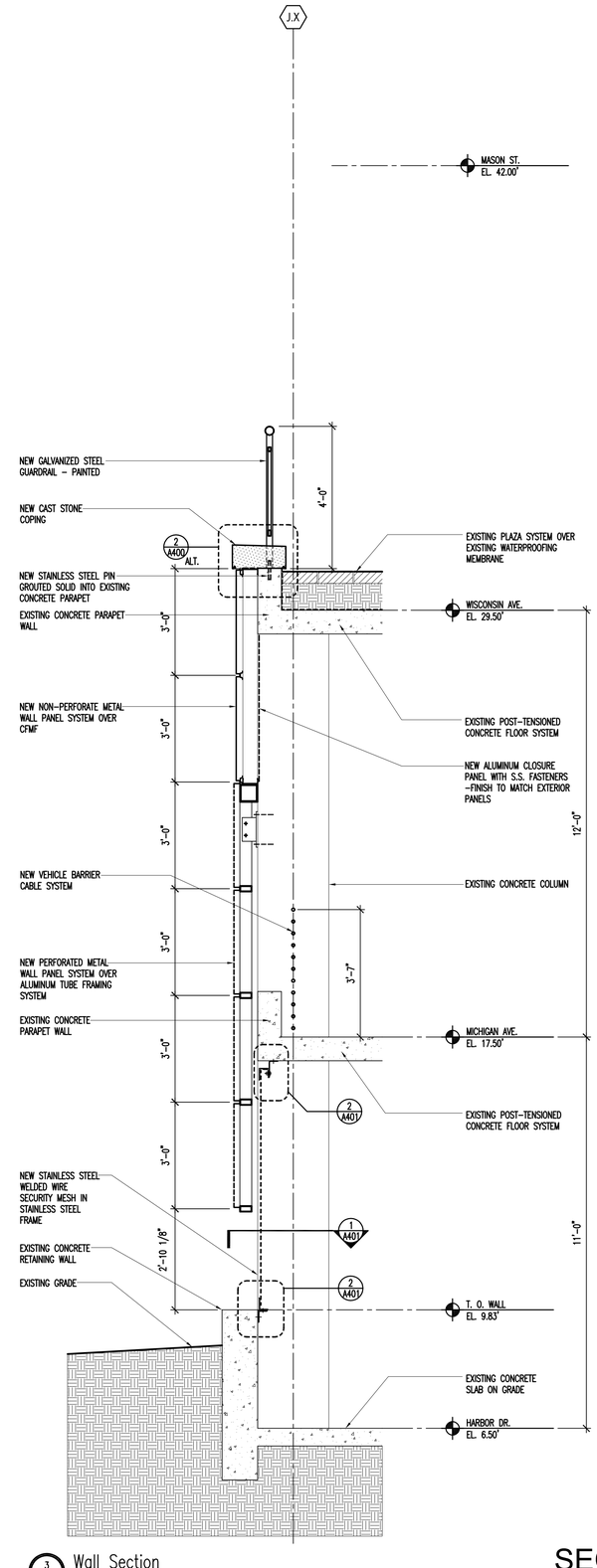

3 A302 Wall Section
SCALE: 1/2"=1'-0"

WALL SECTIONS

P:\2011 2082\112082 O'Donnell Parking Structure\3-Drawings\A300-Alt.dwg

Department of Parks, Recreation and Culture

O'Donnell Park: Parking Structure Facade Improvements

910 East Michigan Street, Milwaukee, Wisconsin 53202-5607

MILWAUKEE COUNTY DEPARTMENT OF TRANSPORTATION AND PUBLIC WORKS

CITY CAMPUS 2711 W. WELLS ST - 2ND FLOOR MILWAUKEE, WI 53208

REVISIONS:

DATE: **02/22/2011**

PROJECT: **W0114-11415**

SITE NO: **784**

BUILDING NO: **75**

A302 -Alt

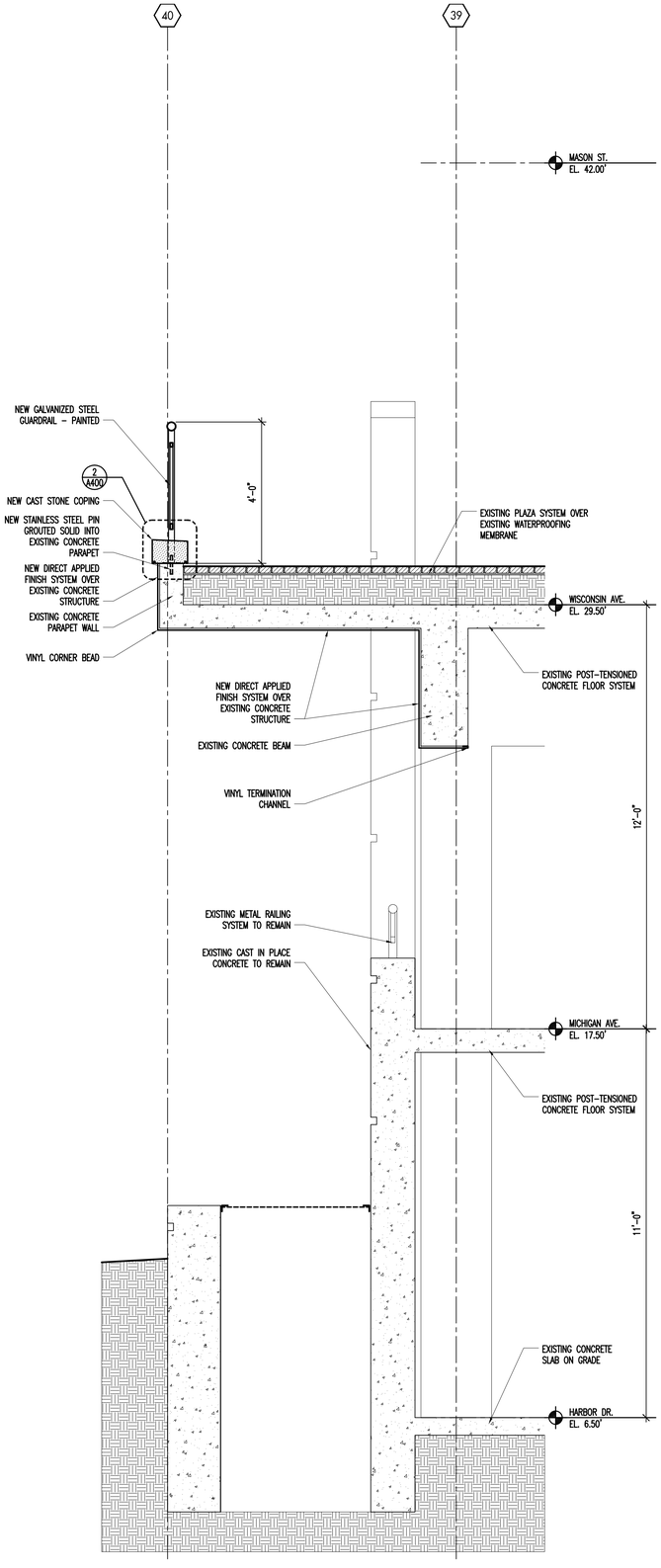

1 A303 Wall Section
SCALE: 1/2"=1'-0"

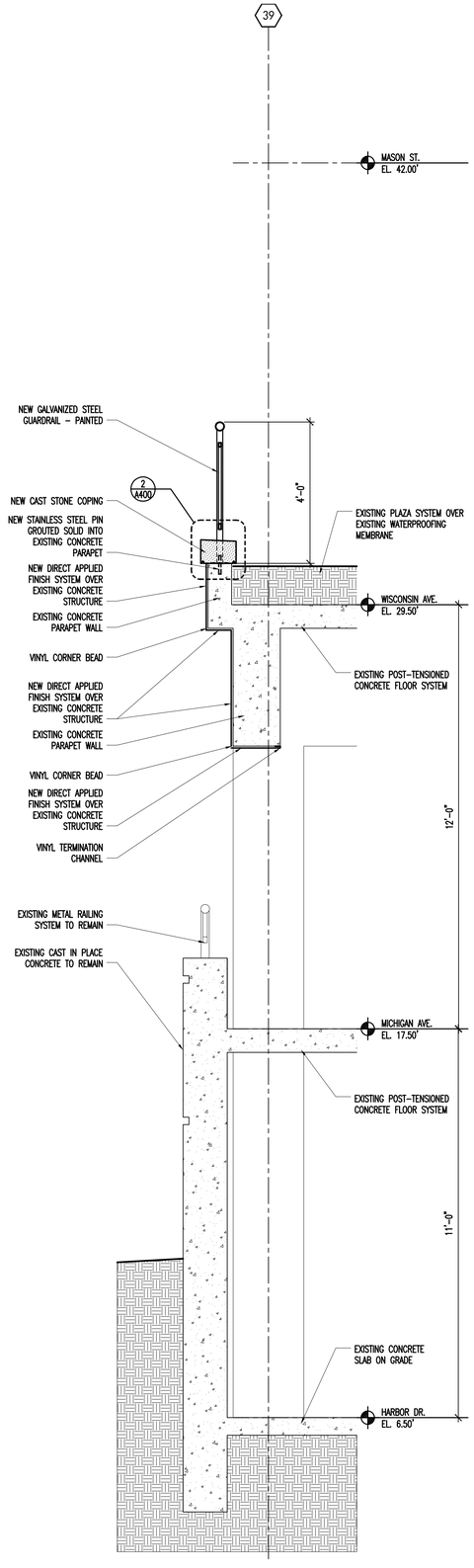

2 A303 Wall Section
SCALE: 1/2"=1'-0"

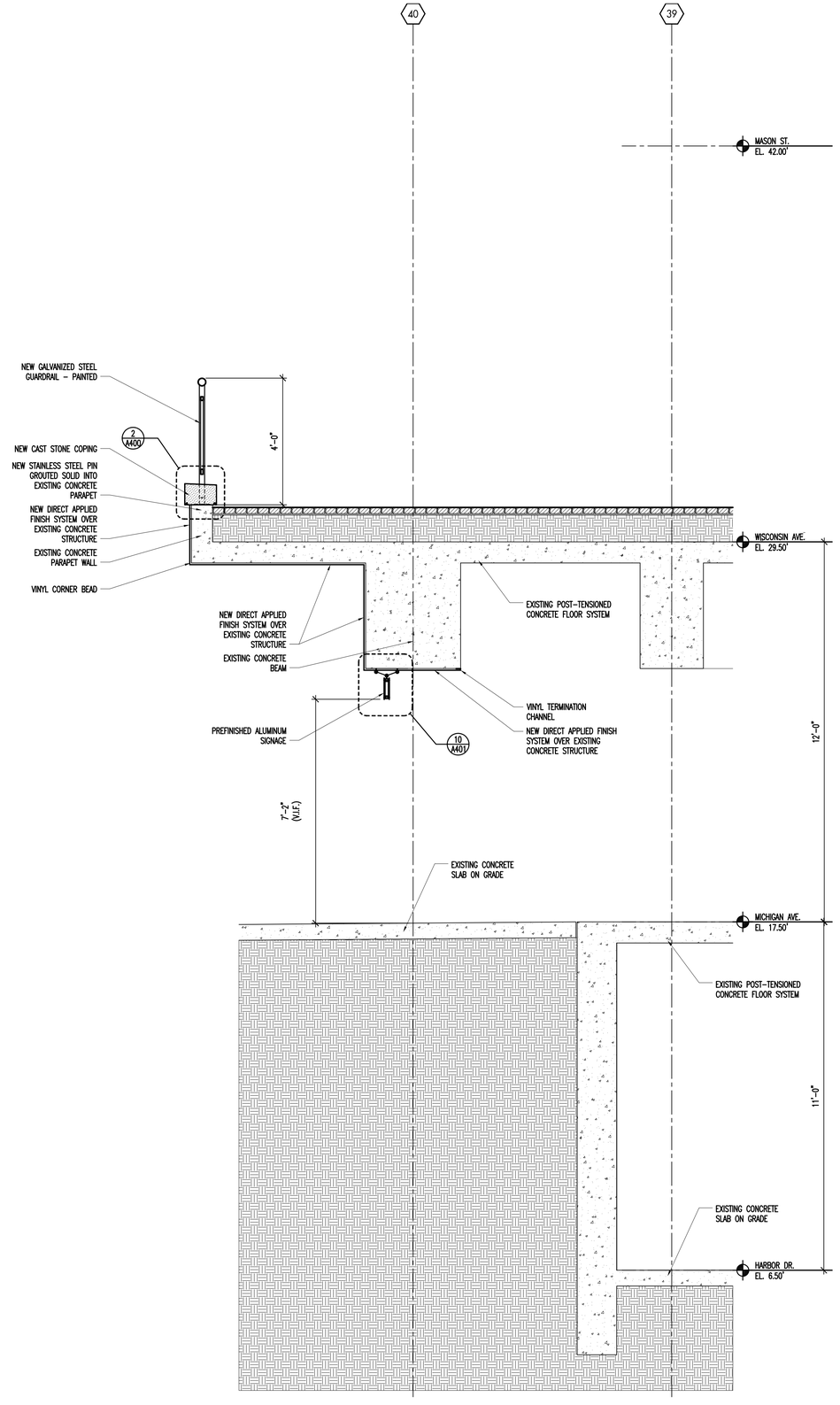

3 A303 Wall Section
SCALE: 1/2"=1'-0"

WALL SECTIONS

A303

Department of Parks, Recreation and Culture

O'Donnell Park: Parking Structure Facade Improvements

910 East Michigan Street, Milwaukee, Wisconsin 53202-5607

MILWAUKEE COUNTY DEPARTMENT OF TRANSPORTATION AND PUBLIC WORKS
CITY CAMPUS 2711 W. WELLS ST - 2ND FLOOR MILWAUKEE, WI 53208

REVISIONS:

DATE: 02/22/2011

PROJECT: W0114-11415

SITE NO: 784

BUILDING NO: 75

P:\2011 2082\1112082 O'Donnell Parking Structure\3-Drawings\A303.dwg

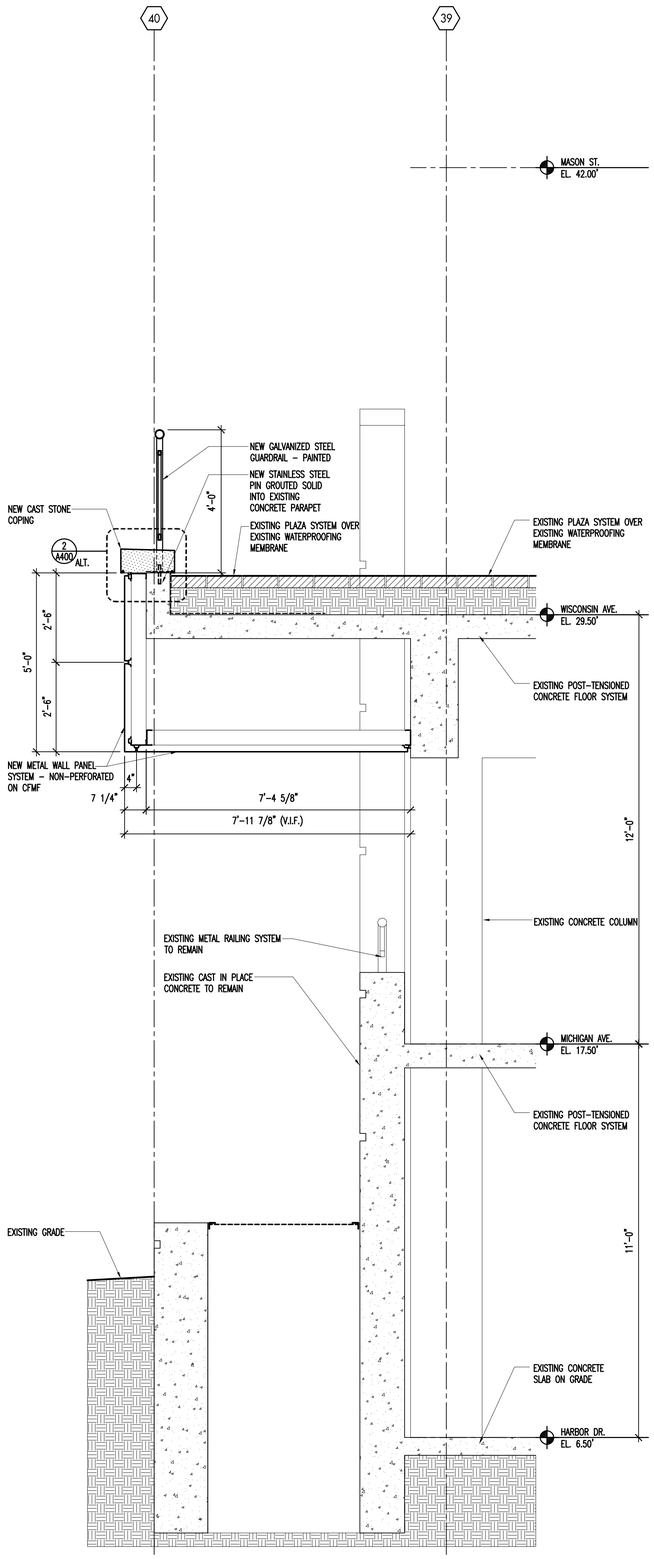

1 A303 Wall Section
SCALE: 1/2"=1'-0"

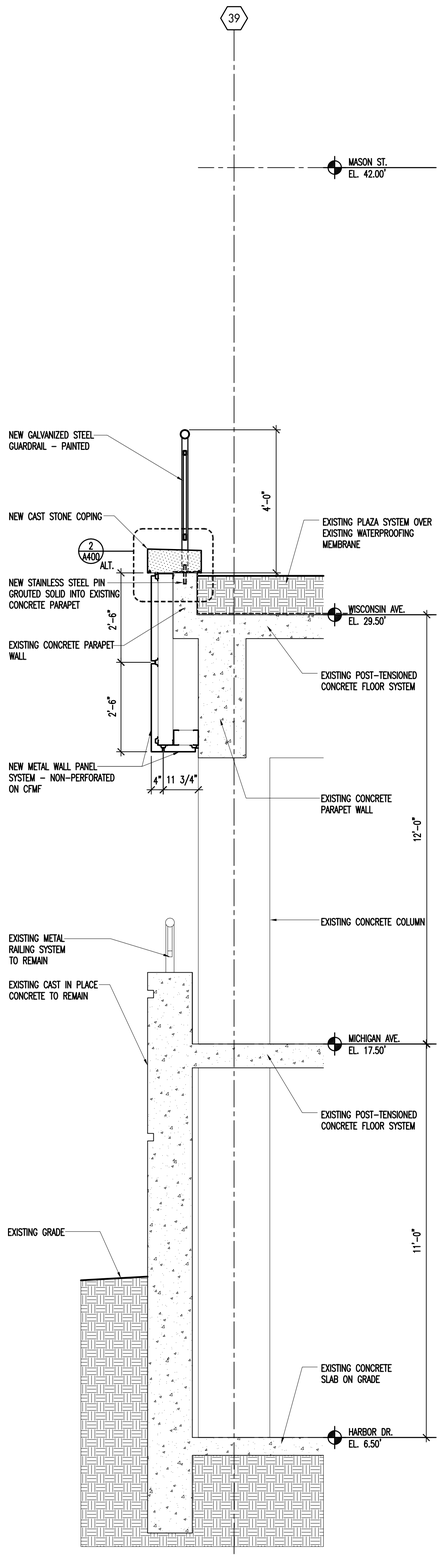

2 A303 Wall Section
SCALE: 1/2"=1'-0"

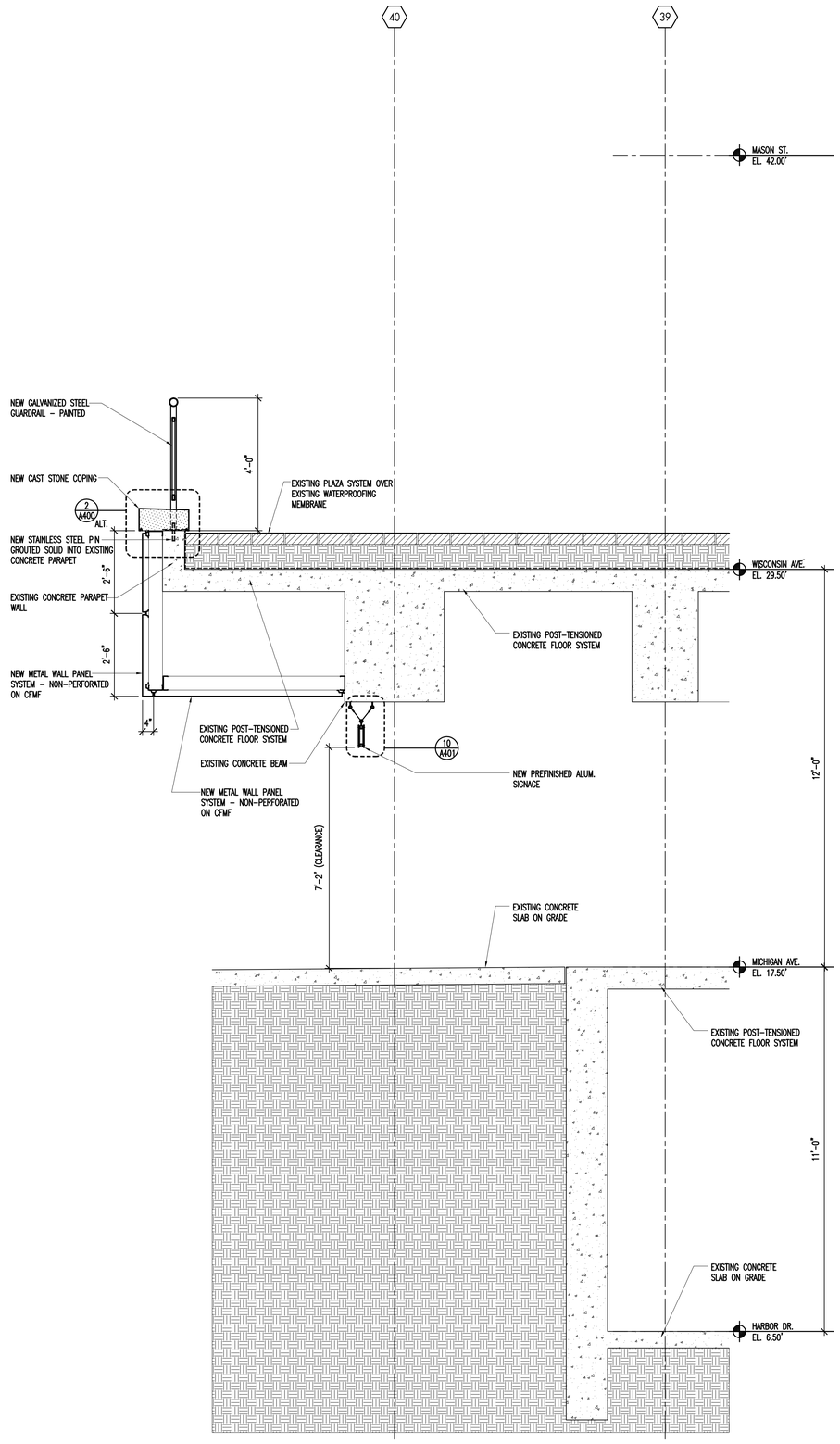

3 A303 Wall Section
SCALE: 1/2"=1'-0"

WALL SECTIONS

P:\2011 2082\112082 O'Donnell Parking Structure\3-Drawings\A300-Alt.dwg

Department of Parks, Recreation and Culture

O'Donnell Park: Parking Structure Facade Improvements

910 East Michigan Street, Milwaukee, Wisconsin 53202-5607

MILWAUKEE COUNTY DEPARTMENT OF TRANSPORTATION AND PUBLIC WORKS

CITY CAMPUS 2711 W. WELLS ST - 2ND FLOOR MILWAUKEE, WI 53208

REVISIONS:

DATE: **02/22/2011**

PROJECT: **W0114-11415**

SITE NO: **784**

BUILDING NO: **75**

A303 -Alt

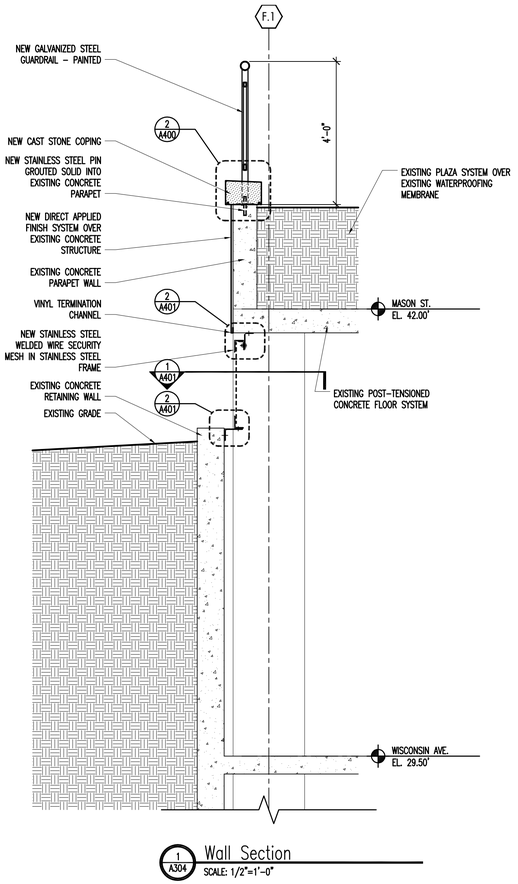

1 A304 Wall Section
SCALE: 1/2"=1'-0"

P:\2011 20821112082 O'Donnell Parking Structure\3-Drawings\A304.dwg

Department of Parks, Recreation and Culture

O'Donnell Park: Parking Structure Facade Improvements

910 East Michigan Street, Milwaukee, Wisconsin 53202-5607

MILWAUKEE COUNTY DEPARTMENT OF TRANSPORTATION AND PUBLIC WORKS
CITY CAMPUS 2711 W. WELLS ST - 2ND FLOOR MILWAUKEE, WI 53208

REVISIONS:

DATE: **02/22/2011**

PROJECT: **W0114-11415**

SITE NO: **784**

BUILDING NO: **75**

WALL SECTIONS

A304

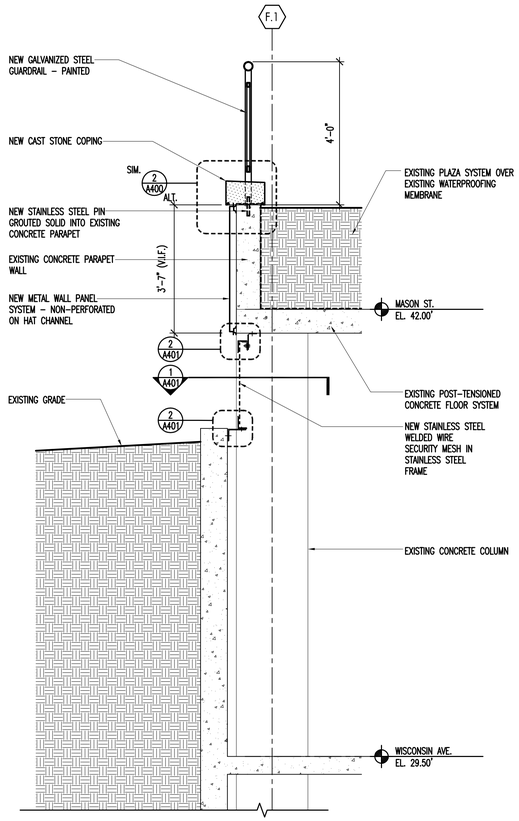

1 A304 Wall Section
SCALE: 1/2"=1'-0"

P:\2011 2082\112082 O'Donnell Parking Structure\3-Drawings\A300-Alt.dwg

Department of Parks, Recreation and Culture

O'Donnell Park: Parking Structure Facade Improvements

910 East Michigan Street, Milwaukee, Wisconsin 53202-5607

MILWAUKEE COUNTY DEPARTMENT OF TRANSPORTATION AND PUBLIC WORKS
CITY CAMPUS 2711 W. WELLS ST - 2ND FLOOR MILWAUKEE, WI 53208

REVISIONS:

DATE: **02/22/2011**

PROJECT: **W0114-11415**

SITE NO: **784**

BUILDING NO: **75**

WALL SECTIONS

A304 -Alt

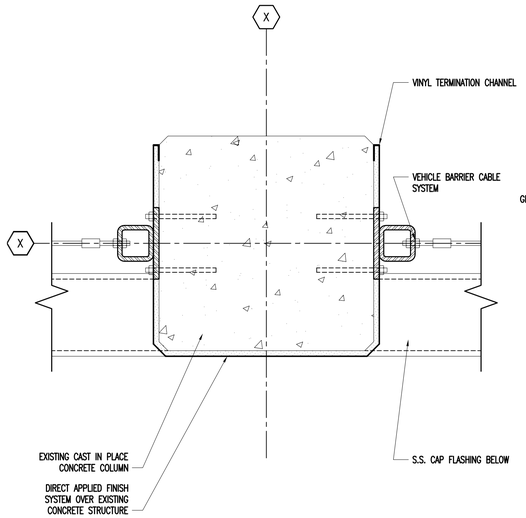

1 A400 Column Detail
SCALE: 1 1/2"=1'-0"

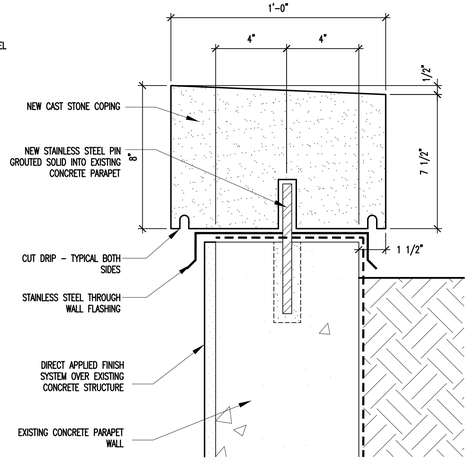

2 A400 Parapet Detail
SCALE: 3"=1'-0"

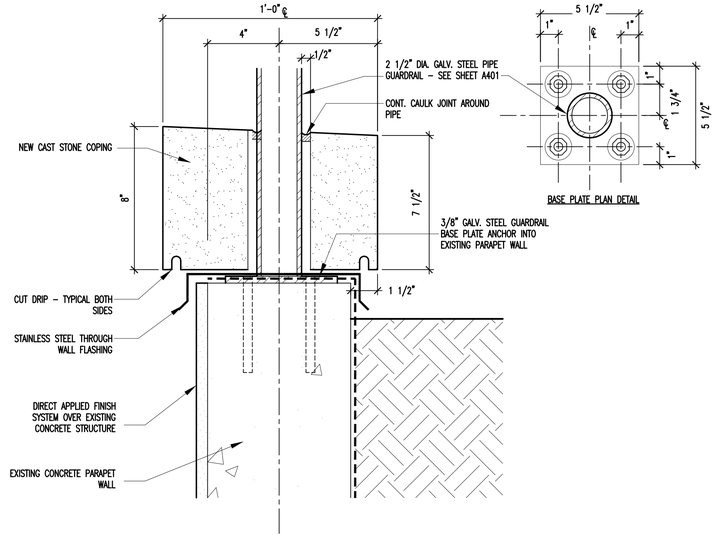

3 A400 Railing Post Detail
SCALE: 3"=1'-0"

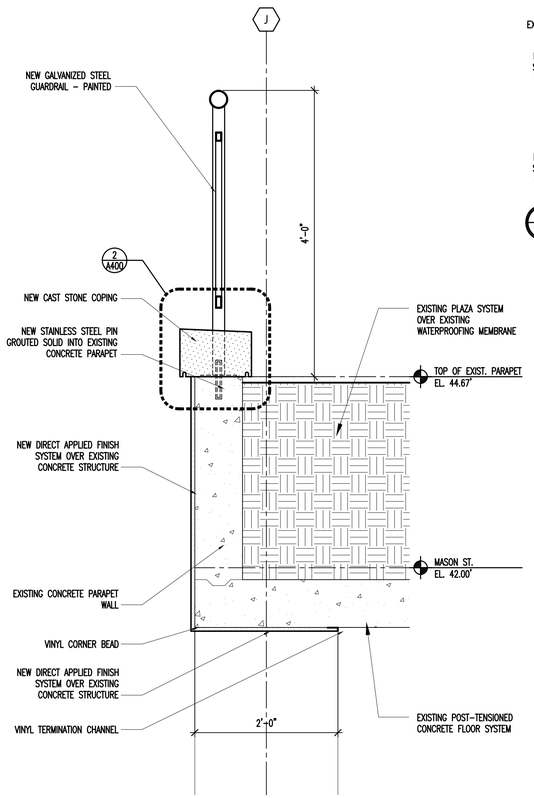

4 A400 Parapet Detail
SCALE: 1"=1'-0"

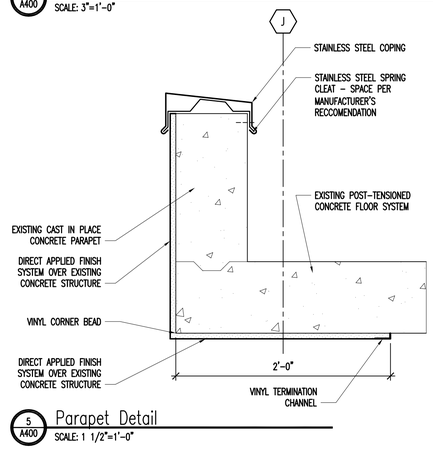

5 A400 Parapet Detail
SCALE: 1 1/2"=1'-0"

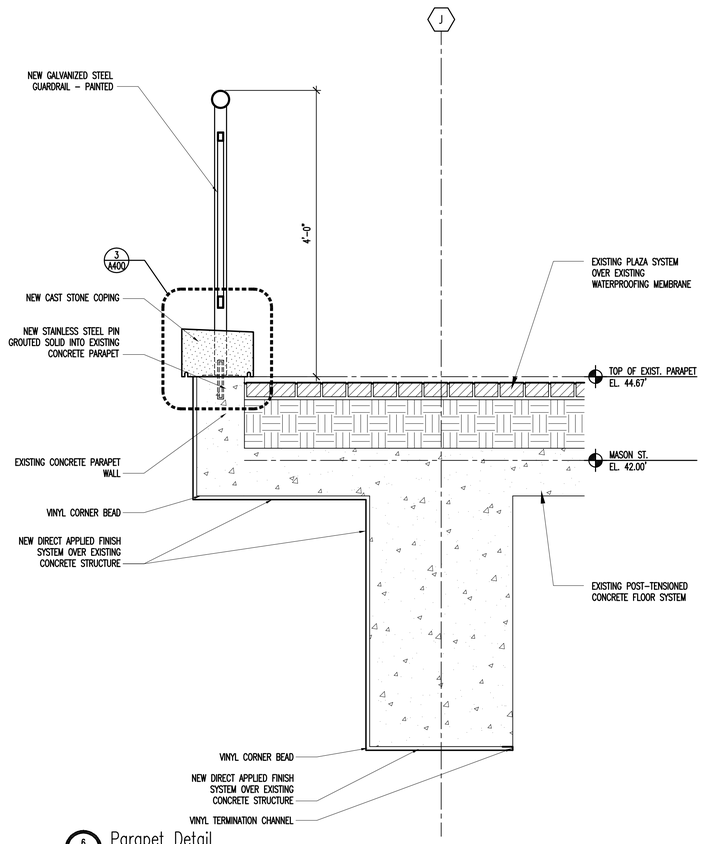

6 A400 Parapet Detail
SCALE: 1"=1'-0"

P:\2011 2082111208\2 O'Donnell Parking Structure\3-Drawings\A400.dwg

Department of Parks, Recreation and Culture

O'Donnell Park: Parking Structure Facade Improvements

910 East Michigan Street, Milwaukee, Wisconsin 53202-5607

MILWAUKEE COUNTY DEPARTMENT OF TRANSPORTATION AND PUBLIC WORKS

CITY CAMPUS 2711 W. WELLS ST - 2ND FLOOR MILWAUKEE, WI 53208

REVISIONS:

DATE: **02/22/2011**

PROJECT: **W0114-11415**

SITE NO: **784**

BUILDING NO: **75**

DETAILS **A400**

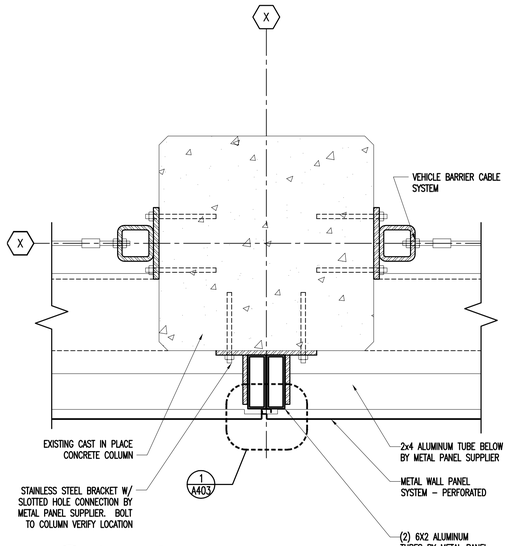

1 A400 Column Detail
SCALE: 1 1/2"=1'-0"

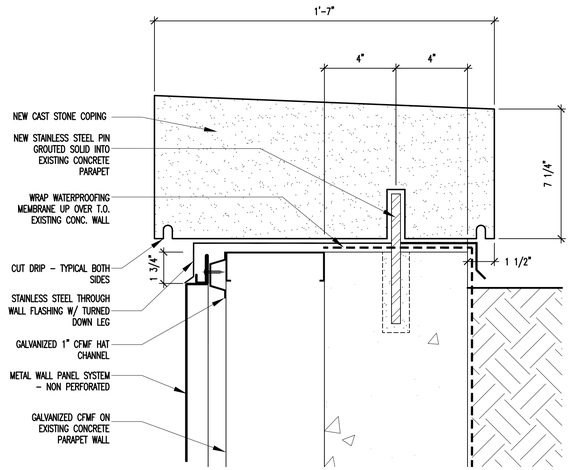

2 A400 Parapet Detail
SCALE: 3"=1'-0"

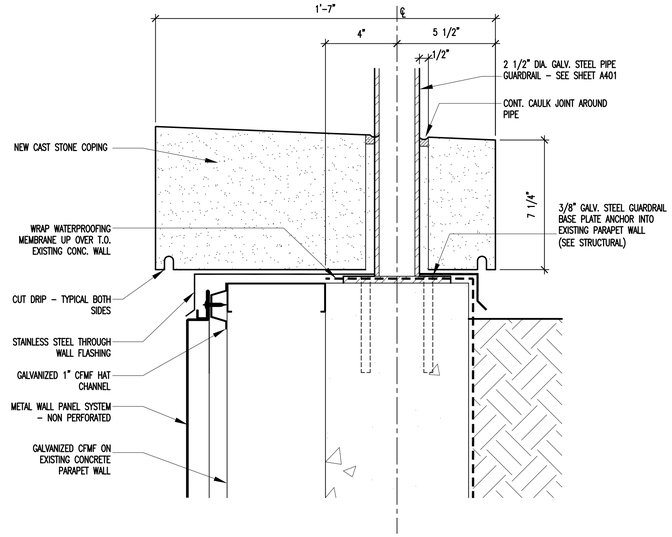

3 A400 Parapet Detail
SCALE: 3"=1'-0"

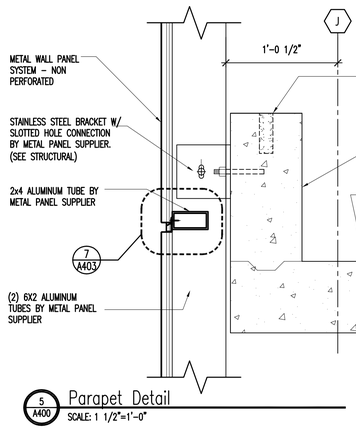

5 A400 Parapet Detail
SCALE: 1 1/2"=1'-0"

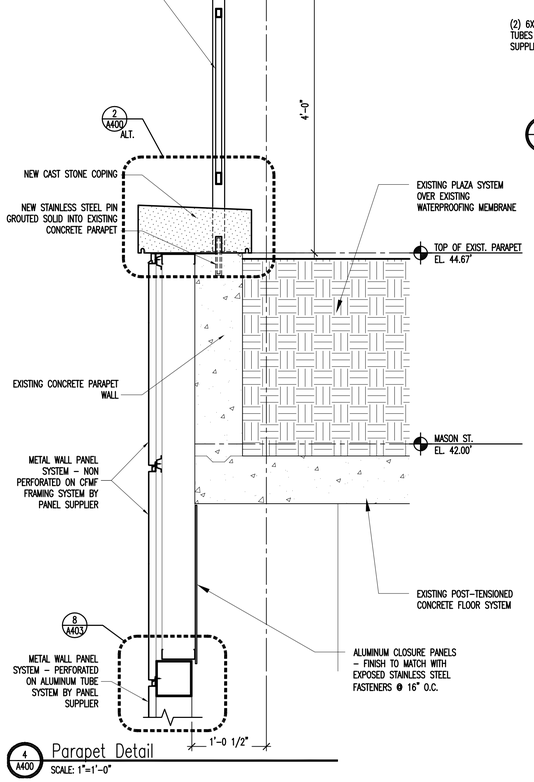

4 A400 Parapet Detail
SCALE: 1"=1'-0"

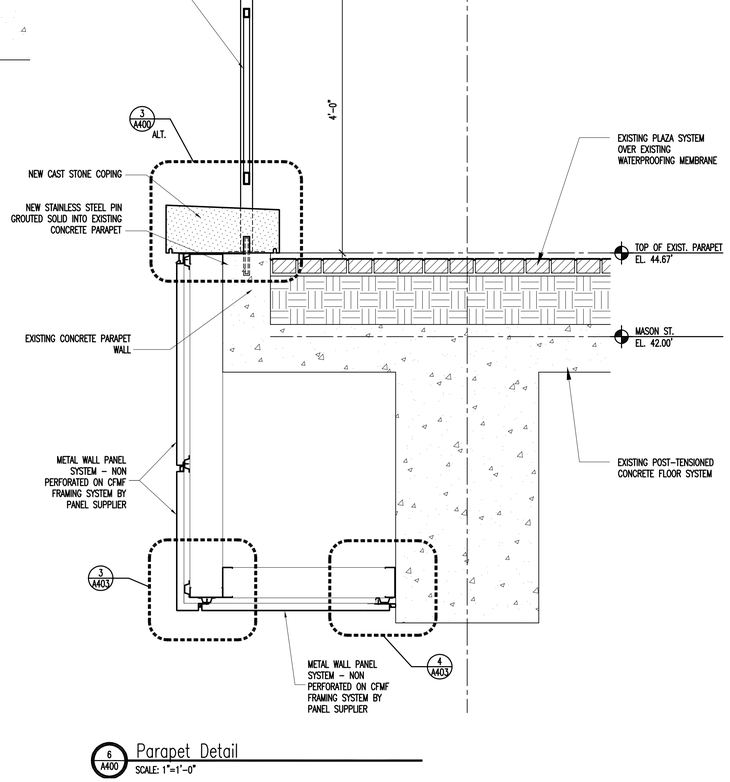

6 A400 Parapet Detail
SCALE: 1"=1'-0"

P:\2011 2082\1112082 O'Donnell Parking Structure\3-Drawings\A400-Alt.dwg

Department of Parks, Recreation and Culture

O'Donnell Park: Parking Structure Facade Improvements

910 East Michigan Street, Milwaukee, Wisconsin 53202-5607

MILWAUKEE COUNTY DEPARTMENT OF TRANSPORTATION AND PUBLIC WORKS

CITY CAMPUS 2711 W. WELLS ST - 2ND FLOOR MILWAUKEE, WI 53208

REVISIONS:

DATE: 02/22/2011

PROJECT: W0114-11415

SITE NO: 784

BUILDING NO: 75

DETAILS

A400 -Alt

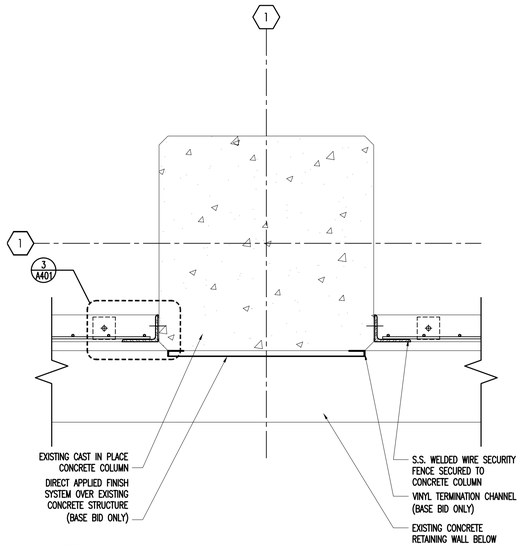

1 A401 Column Detail
SCALE: 1 1/2"=1'-0"

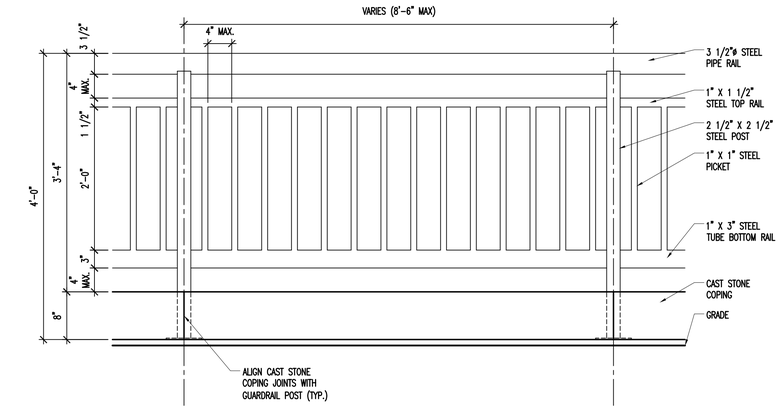

4 A401 Pipe Railing Elevation and Section
SCALE: 1"=1'-0"

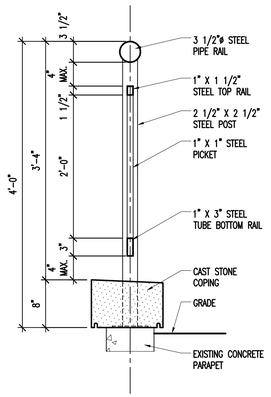

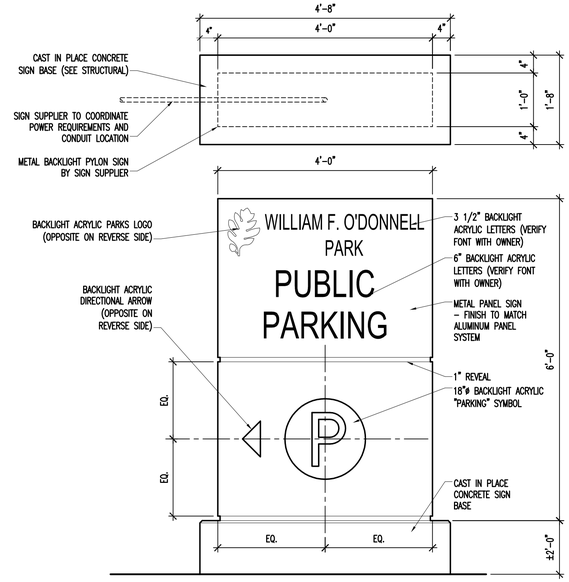

11 A401 Pylon Sign Plan and Elevation
SCALE: 3/4"=1'-0"

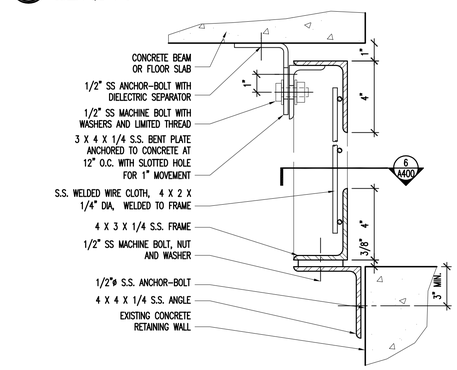

2 A401 Security Fence Detail
SCALE: 3"=1'-0"

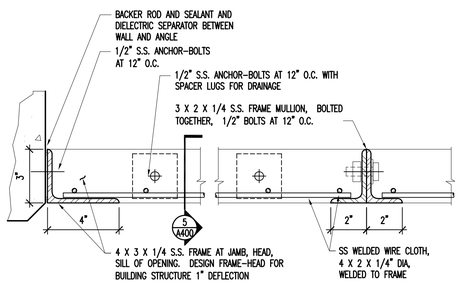

3 A401 Security Fence Plan Detail
SCALE: 3"=1'-0"

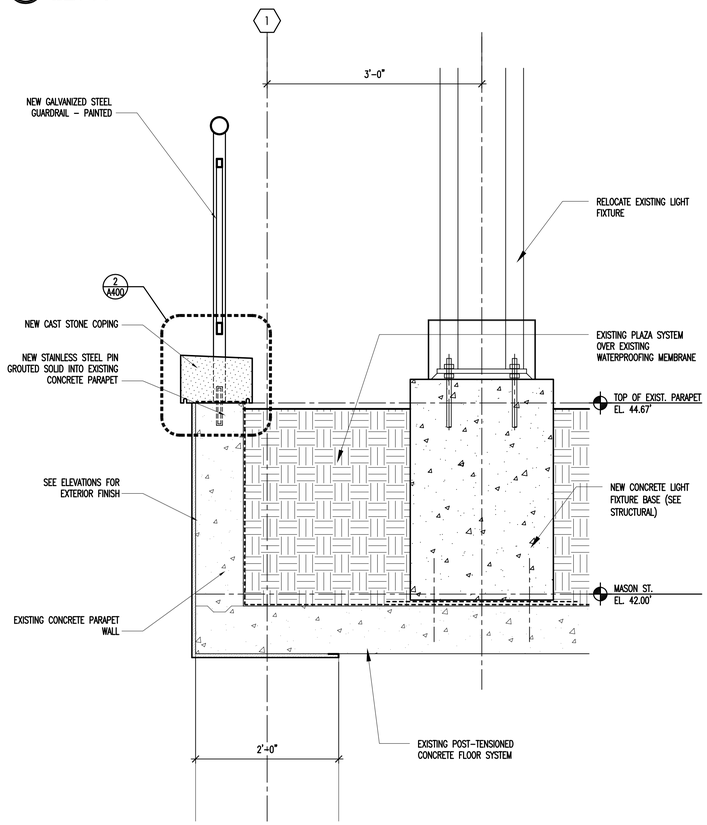

5 A401 Light Fixture Base Detail
SCALE: 1"=1'-0"

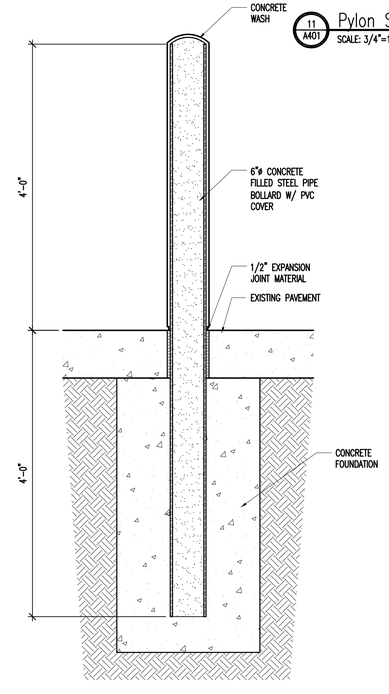

6 A401 Bollard Detail
SCALE: 1"=1'-0"

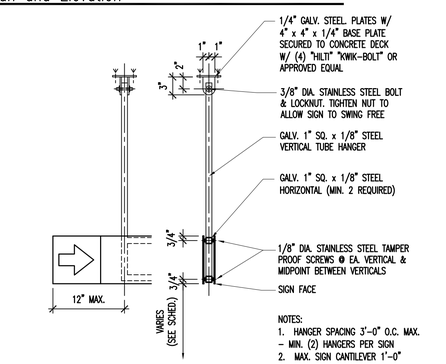

9 A401 Ceiling Mounting Sign Detail
SCALE: 1"=1'-0"

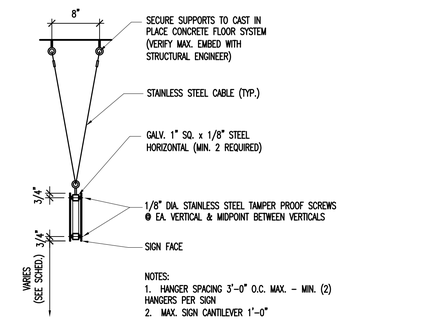

10 A401 Alternate Ceiling Mounting Sign Detail
SCALE: 1"=1'-0"

SIGN SCHEDULE

MARK	SIZE W	SIZE L	TEXT/MESSAGE	BACKGROUND COLOR	LETTERS/SYMBOLS H	LETTERS/SYMBOLS COLOR	MOUNTING HEIGHT HT.
S01	8"	9'-0"	ENTER • CLEARANCE 7'-2"	WHITE	6"	BLACK	7'-2" T.B.
S02	8"	9'-0"	EXIT ONLY • DO NOT ENTER	WHITE	6"	BLACK	7'-2" T.B.
S03	8"	9'-0"	EXIT TO LINCOLN MEMORIAL DR.	WHITE	6"	BLACK	7'-2" T.B.
S04	8"	9'-0"	EXIT TO MICHIGAN ST.	WHITE	6"	BLACK	7'-2" T.B.
S05	8"	9'-0"	DO NOT ENTER	WHITE	6"	BLACK	7'-2" T.B.

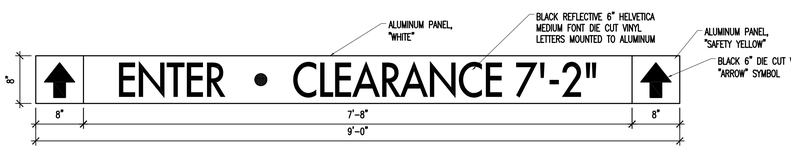

7 A401 Typical Entrance Signage
SCALE: 1" = 1'-0"

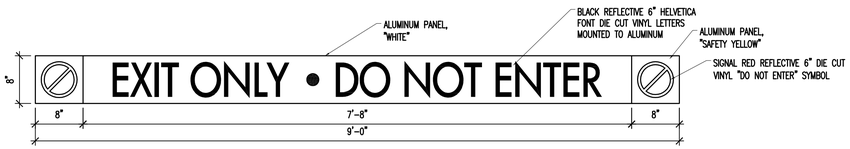

8 A401 Typical Exit Signage
SCALE: 1"=1'-0"

DETAILS

A401

Department of Parks, Recreation and Culture
O'Donnell Park: Parking Structure Facade Improvements
910 East Michigan Street, Milwaukee, Wisconsin 53202-5607

MILWAUKEE COUNTY DEPARTMENT OF TRANSPORTATION AND PUBLIC WORKS
CITY CAMPUS 2711 W. WELLS ST - 2ND FLOOR MILWAUKEE, WI 53208

REVISIONS:

DATE: 02/22/2011
PROJECT: W0114-11415
SITE NO: 784
BUILDING NO: 75

P:\2011 20821112082 O'Donnell Parking Structure\3-Drawings\A401.dwg

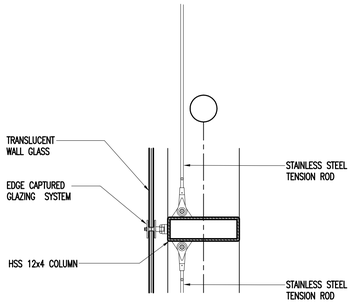

1 A402 Vertical Laminated Glazing System Detail
SCALE: 1"=1'-0"

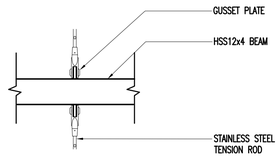

2 A402 Elevation Detail
SCALE: 1"=1'-0"

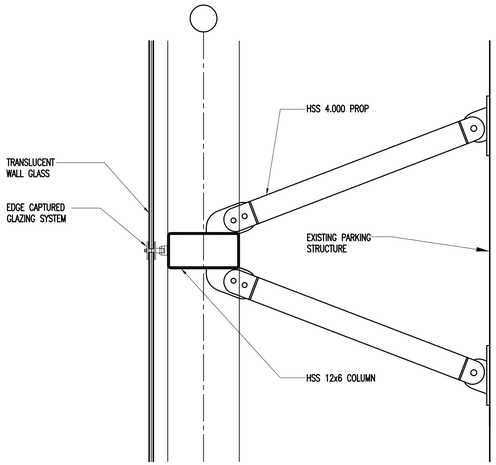

3 A402 Horizontal Laminated Glazing System Detail
SCALE: 1"=1'-0"

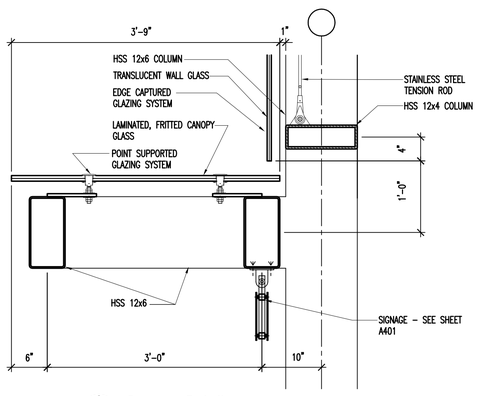

4 A402 Canopy Detail
SCALE: 1"=1'-0"

P:\2011 208211120\82 O'Donnell Parking Structure\3-Drawings\A402-Alt.dwg

Department of Parks, Recreation and Culture

O'Donnell Park: Parking Structure Facade Improvements

910 East Michigan Street, Milwaukee, Wisconsin 53202-5607

MILWAUKEE COUNTY DEPARTMENT OF TRANSPORTATION AND PUBLIC WORKS

CITY CAMPUS 2711 W. WELLS ST - 2ND FLOOR MILWAUKEE, WI 53208

REVISIONS:

DATE: **02/22/2011**

PROJECT: **W0114-11415**

SITE NO: **784**

BUILDING NO: **75**

DETAILS

A402 -Alt

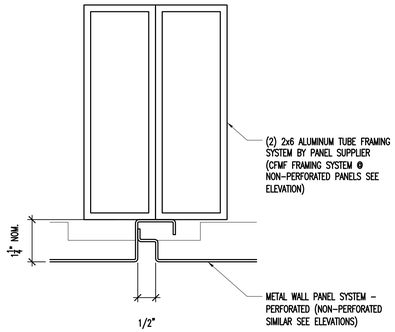

1 A403 Metal Panel Vertical Joint Detail
SCALE: 6"=1'-0"

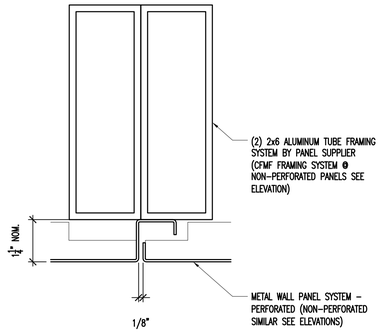

2 A403 Metal Panel Int. Vertical Joint Detail
SCALE: 6"=1'-0"

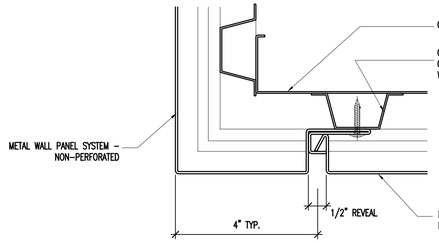

3 A403 Metal Panel Soffit Edge Detail
SCALE: 6"=1'-0"

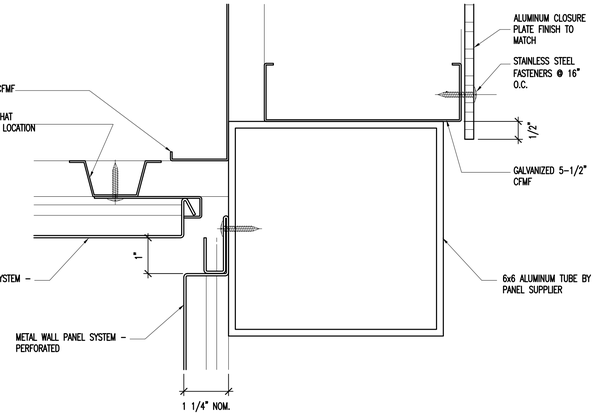

4 A403 Metal Panel Soffit to Vertical Panel Detail
SCALE: 6"=1'-0"

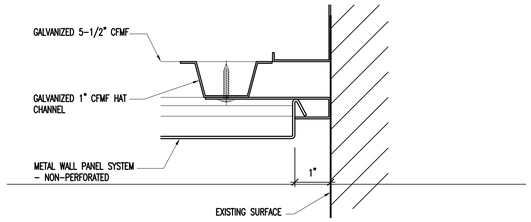

5 A403 Metal Panel Soffit to Vertical Surface Detail
SCALE: 6"=1'-0"

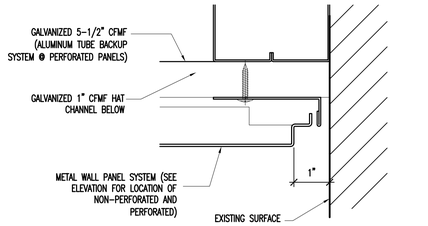

6 A403 Metal Panel Vertical Joint Detail @ Wall
SCALE: 6"=1'-0"

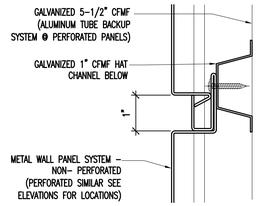

7 A403 Metal Panel Horizontal Joint Detail
SCALE: 6"=1'-0"

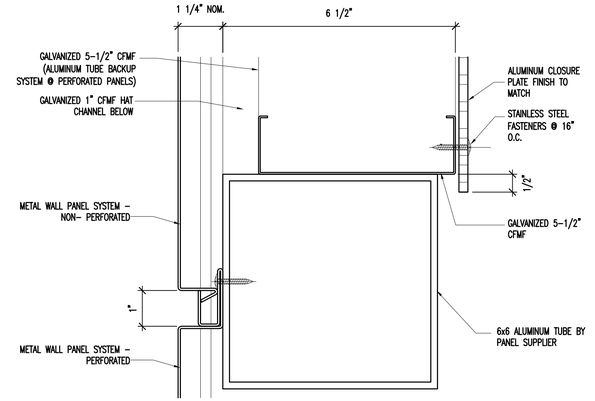

8 A403 Metal Panel Horizontal Joint Detail
SCALE: 6"=1'-0"

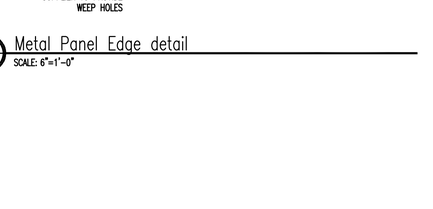

9 A403 Metal Panel Edge detail
SCALE: 6"=1'-0"

P:\2011 2082\112082 O'Donnell Parking Structure\3-Drawings\A403-Alt.dwg

Department of Parks, Recreation and Culture

O'Donnell Park: Parking Structure Facade Improvements

910 East Michigan Street, Milwaukee, Wisconsin 53202-5607

MILWAUKEE COUNTY DEPARTMENT OF TRANSPORTATION AND PUBLIC WORKS
CITY CAMPUS 2711 W. WELLS ST - 2ND FLOOR MILWAUKEE, WI 53208

REVISIONS:

DATE: **02/22/2011**

PROJECT: **W0114-11415**

SITE NO: **784**

BUILDING NO: **75**

A403 -Alt

DETAILS

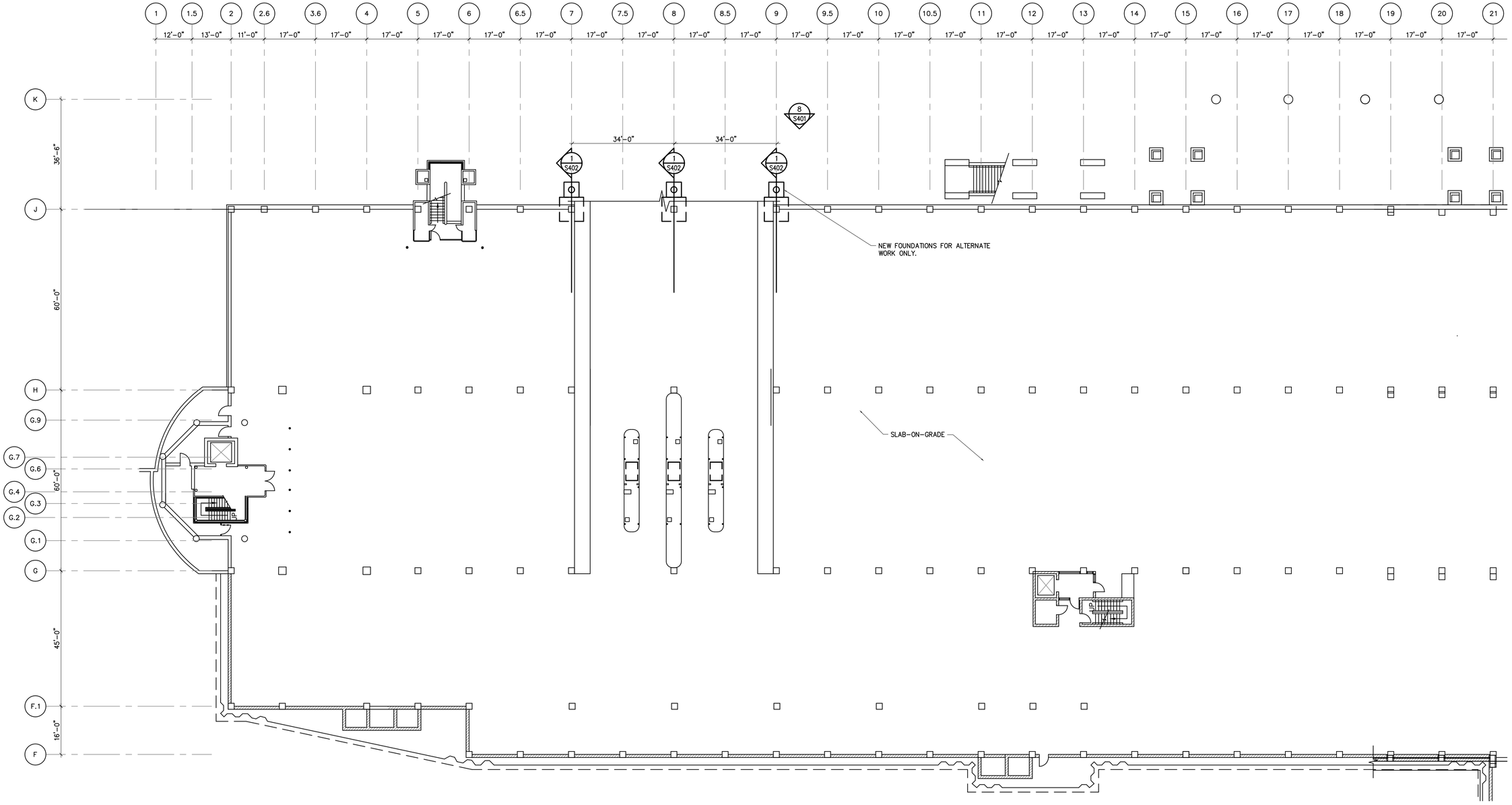

LINCOLN MEMORIAL DRIVE LEVEL
REPAIR PLAN - SECTOR 1

1/16"=1'-0"

North

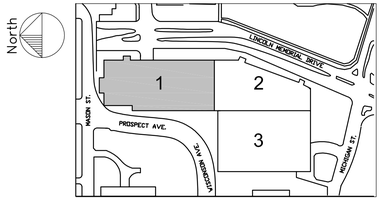

LINCOLN MEMORIAL DRIVE LEVEL REPAIR PLAN - SECTOR 1

Department of Parks, Recreation and Culture

O'Donnell Park: Parking Structure Facade Improvements

910 East Michigan Street, Milwaukee, Wisconsin 53202-5607

MILWAUKEE COUNTY DEPARTMENT OF TRANSPORTATION AND PUBLIC WORKS

CITY CAMPUS 2711 W. WELLS ST - 2ND FLOOR MILWAUKEE, WI 53208

REVISIONS:
00/00/0000

DATE:
02/22/2011

PROJECT:
W0114-11415

SITE NO:
784

BUILDING NO:
75

S-101

Z:\RST PROJECTS\2010 Projects\R2-2010 Building Facade Projects\R2-2010-070 O'Donnell Park (WAM)\CAD\REPAIR DRAWINGS\S101-S103.dwg

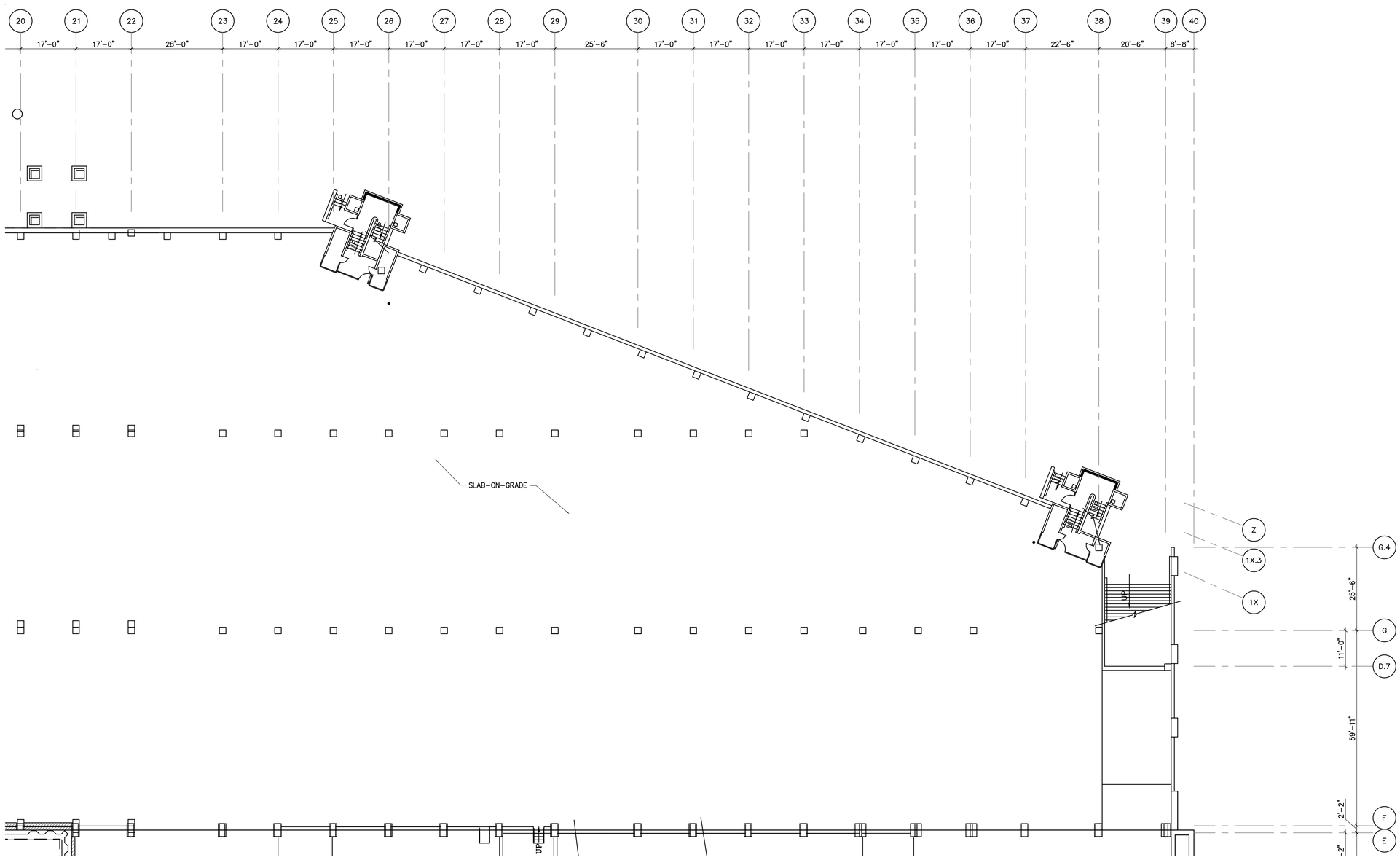

LINCOLN MEMORIAL DRIVE LEVEL
REPAIR PLAN - SECTOR 2

North

1/16"=1'-0"

SHEET NOTES:

1. NO WORK IN THIS AREA.

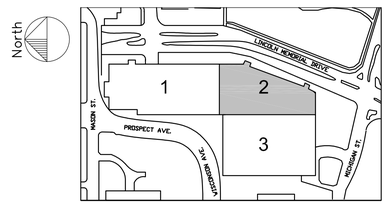

LINCOLN MEMORIAL DRIVE LEVEL REPAIR PLAN - SECTOR 2

Department of Parks, Recreation and Culture

O'Donnell Park: Parking Structure Facade Improvements

910 East Michigan Street, Milwaukee, Wisconsin 53202-5607

MILWAUKEE COUNTY DEPARTMENT OF TRANSPORTATION AND PUBLIC WORKS

CITY CAMPUS 2711 W. WELLS ST - 2ND FLOOR MILWAUKEE, WI 53208

REVISIONS:
00/00/0000

DATE:
02/22/2011

PROJECT:
W0114-11415

SITE NO:
784

BUILDING NO:
75

S-102

Z:\RST PROJECTS\2010 Projects\R2-2010 Building Facade Projects\R2-2010-070 O'Donnell Park (WAM)\CAD\REPAIR DRAWINGS\S101-S103.dwg

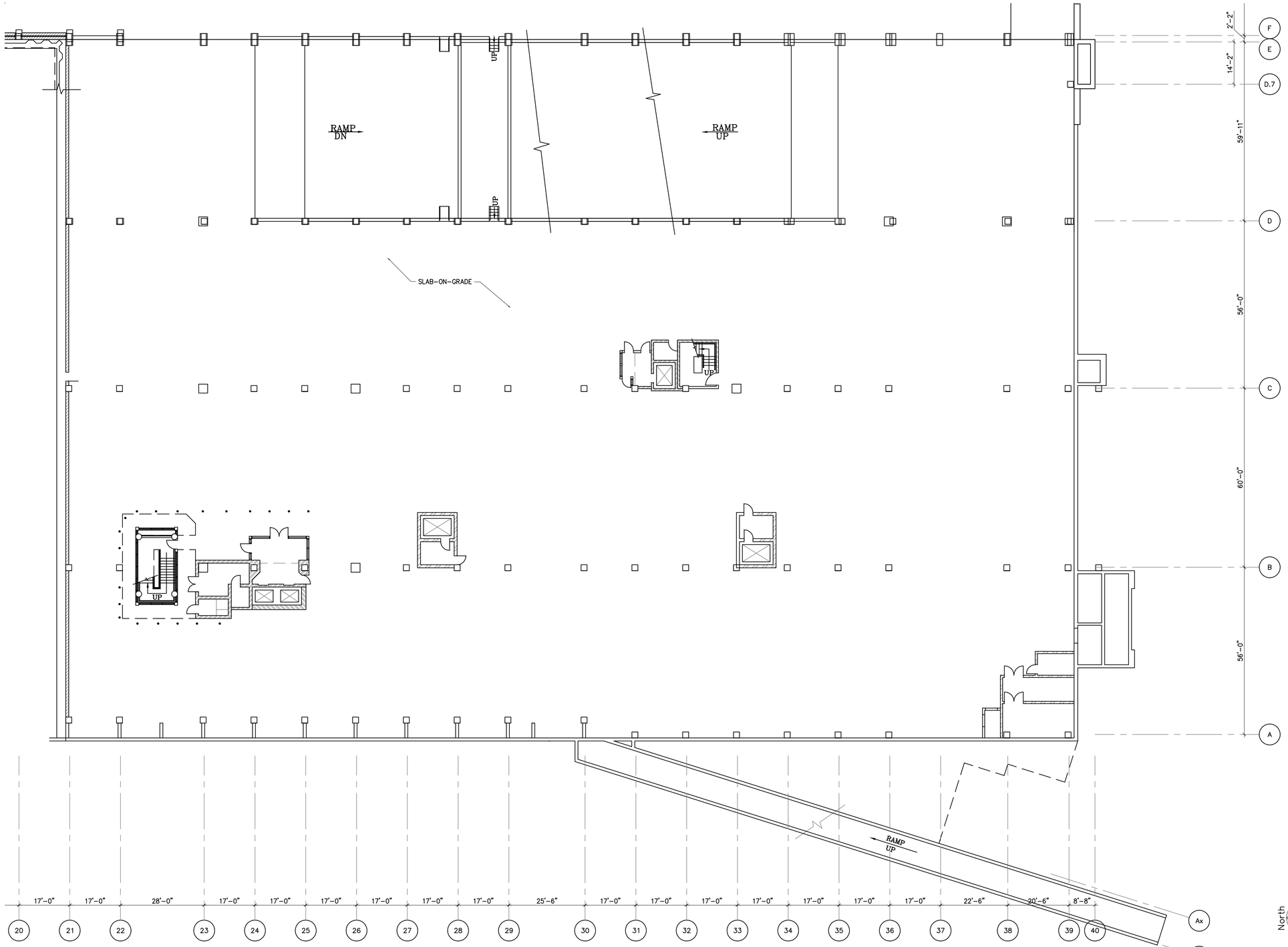

LINCOLN MEMORIAL DRIVE LEVEL
REPAIR PLAN - SECTOR 3
1/16"=1'-0"

North

SHEET NOTES:

1. NO WORK IN THIS AREA.

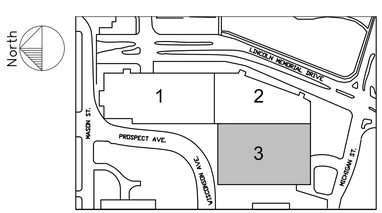

LINCOLN MEMORIAL DRIVE LEVEL
REPAIR PLAN - SECTOR 3

Department of Parks, Recreation and Culture

O'Donnell Park: Parking Structure Facade Improvements

910 East Michigan Street, Milwaukee, Wisconsin 53202-5607

MILWAUKEE COUNTY DEPARTMENT OF TRANSPORTATION AND PUBLIC WORKS
CITY CAMPUS 2711 W. WELLS ST - 2ND FLOOR MILWAUKEE, WI 53208

REVISIONS:
00/00/0000

DATE: **02/22/2011**

PROJECT: **W0114-11415**

SITE NO: **784**

BUILDING NO: **75**

S-103

Z:\RST PROJECTS\2010 Projects\R2-2010 Building Facade Projects\R2-2010-070 ODonnell Park (WAM)\CAD\REPAIR DRAWINGS\S101-S103.dwg

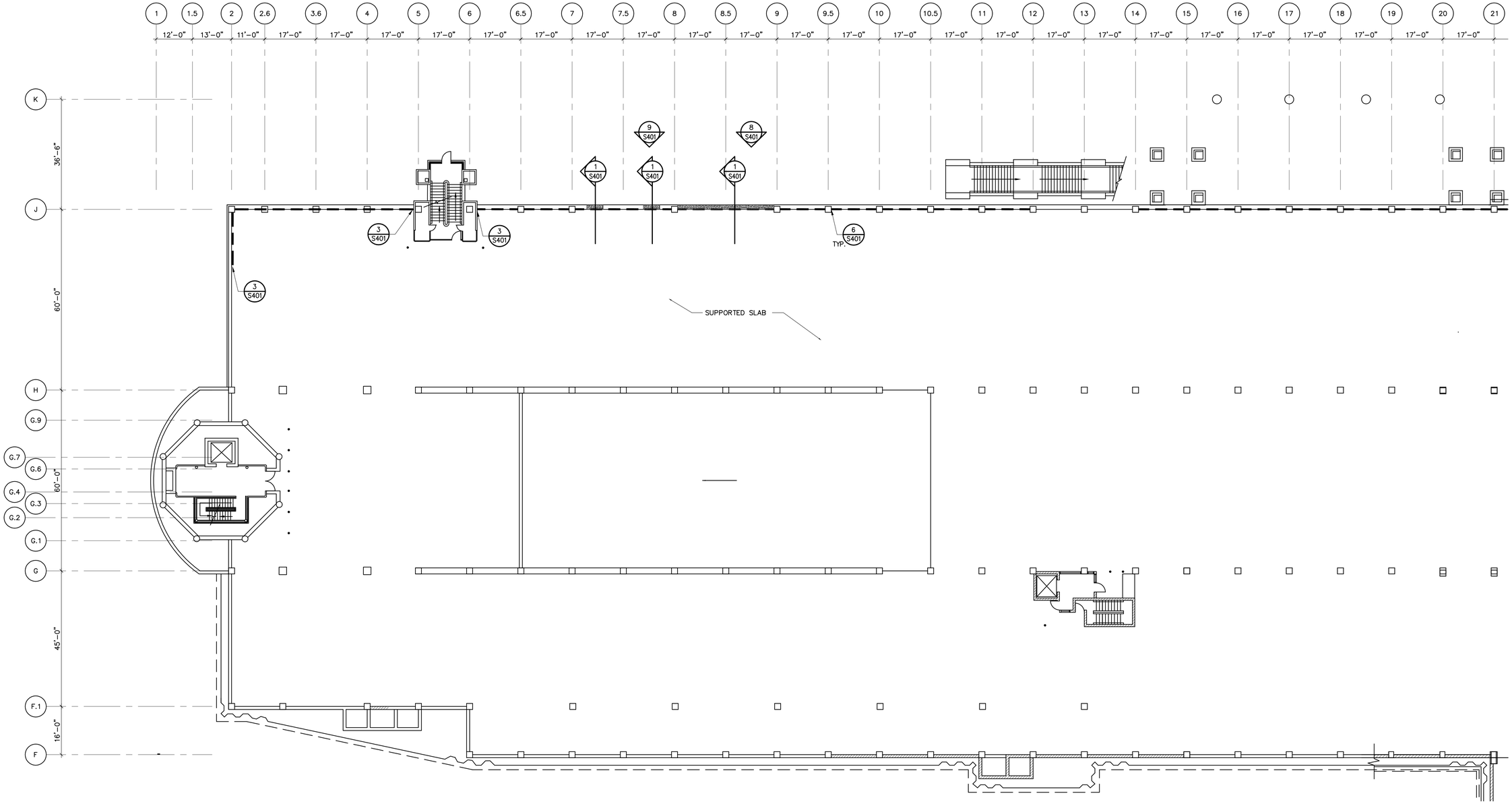

MICHIGAN STREET LEVEL
REPAIR PLAN - SECTOR 1
1/16"=1'-0"

North

LEGEND

= INSTALL BARRIER STRANDS

= CONCRETEE REPAIR AT INSPECTION CUTS.

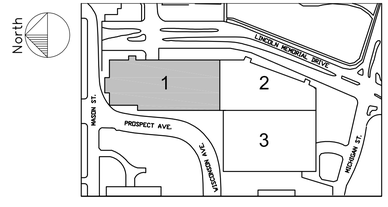

MICHIGAN STREET LEVEL
REPAIR PLAN - SECTOR 1

Department of Parks, Recreation and Culture

O'Donnell Park: Parking Structure Facade Improvements

910 East Michigan Street, Milwaukee, Wisconsin 53202-5607

MILWAUKEE COUNTY DEPARTMENT OF TRANSPORTATION AND PUBLIC WORKS
CITY CAMPUS 2711 W. WELLS ST - 2ND FLOOR MILWAUKEE, WI 53208

REVISIONS:
00/00/0000

DATE:
02/22/2011

PROJECT:
W0114-11415

SITE NO:
784

BUILDING NO:
75

S-111

Z:\RST PROJECTS\2010 Projects\R2-2010 Building Facade Projects\R2-2010-070 O'Donnell Park (WAM)\CAD\REPAIR DRAWINGS\S111-S113.dwg

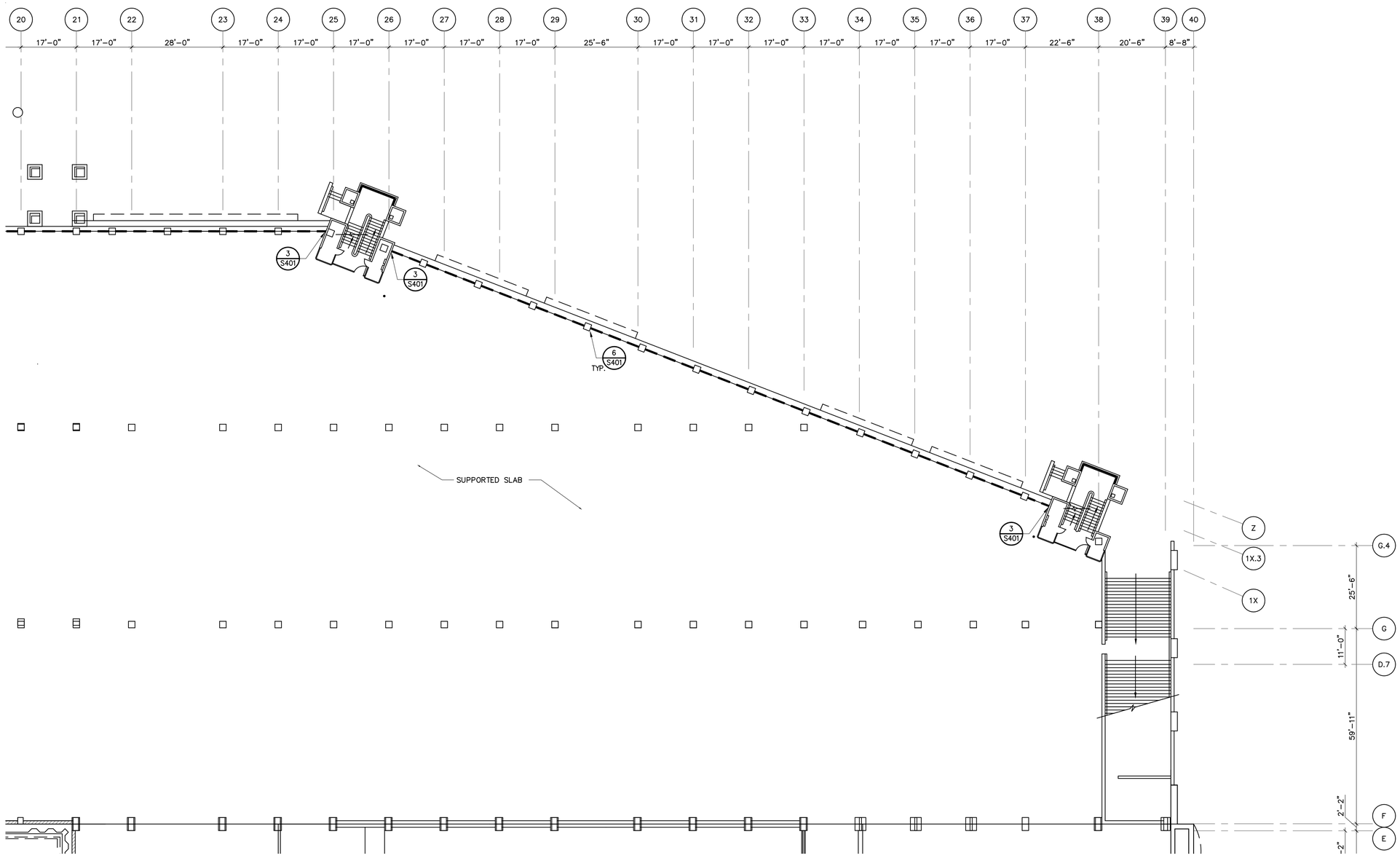

MICHIGAN STREET LEVEL
REPAIR PLAN - SECTOR 2
1/16"=1'-0"

North

LEGEND

= INSTALL BARRIER STRANDS

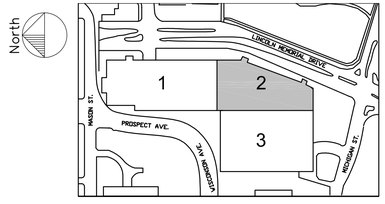

MICHIGAN STREET LEVEL
REPAIR PLAN - SECTOR 2

Department of Parks, Recreation and Culture

O'Donnell Park: Parking Structure Facade Improvements

910 East Michigan Street, Milwaukee, Wisconsin 53202-5607

MILWAUKEE COUNTY DEPARTMENT OF
TRANSPORTATION AND PUBLIC WORKS
CITY CAMPUS 2711 W. WELLS ST - 2ND FLOOR MILWAUKEE, WI 53208

REVISIONS:
00/00/0000

DATE:
02/22/2011

PROJECT:
W0114-11415

SITE NO:
784

BUILDING NO:
75

S-112

Z:\RST PROJECTS\2010 Projects\R2-2010 Building Facade Projects\R2-2010-070 O'Donnell Park (WAM)\CAD\REPAIR DRAWINGS\S111-S113.dwg

Z:\RST PROJECTS\2010 Projects\R2-2010 Building Facade Projects\R2-2010-070 O'Donnell Park (WAM)\CAD\REPAIR DRAWINGS\S111-S113.dwg

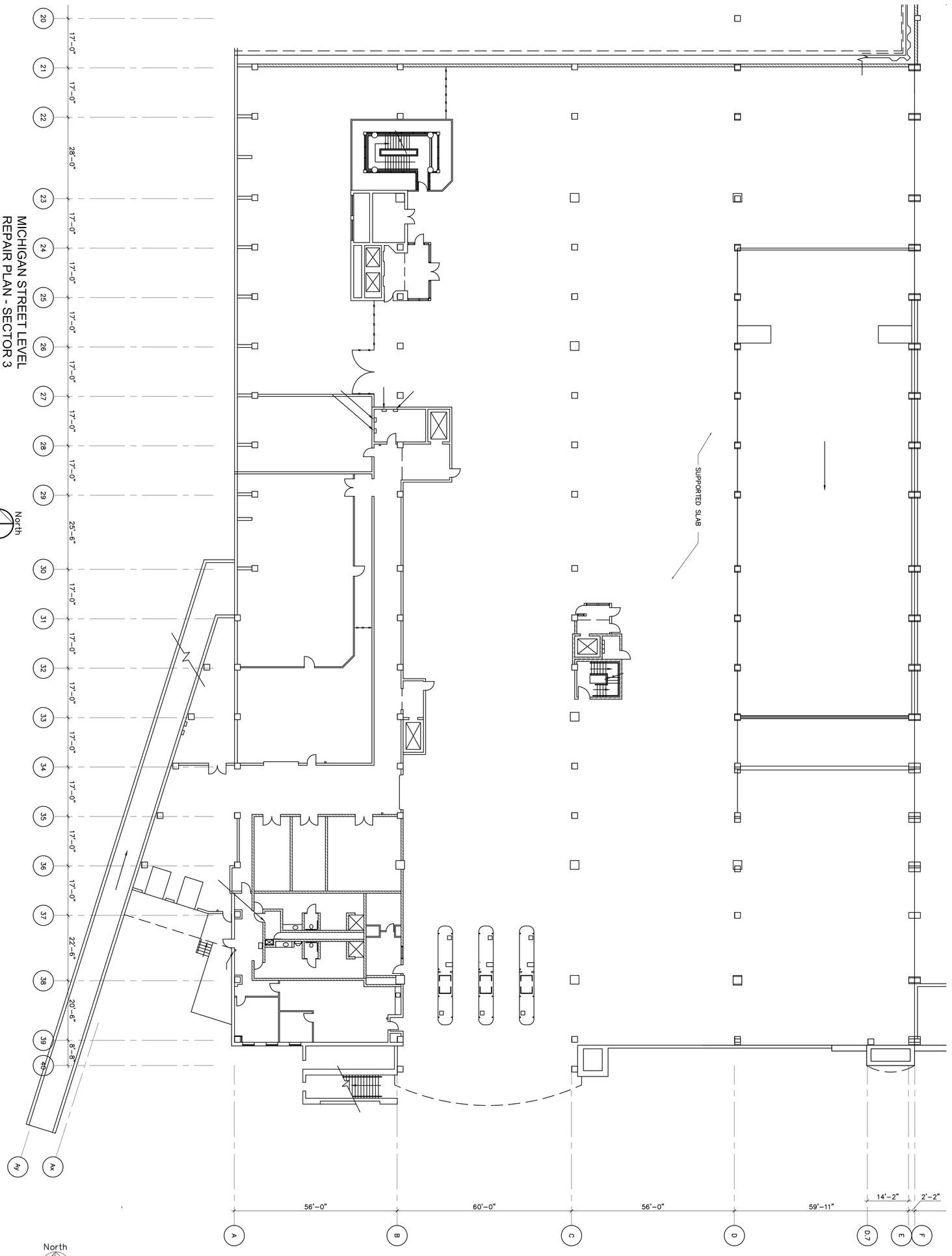

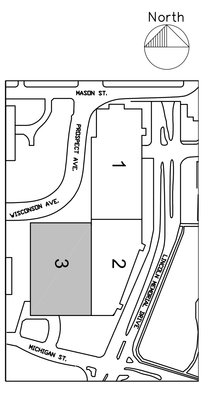

MICHIGAN STREET LEVEL
REPAIR PLAN - SECTOR 3

S-113

DATE: 02/22/2011
PROJECT: W0114-11415
SITE NO: 784
BUILDING NO: 75

REVISIONS: 00/00/0000

MILWAUKEE COUNTY DEPARTMENT OF TRANSPORTATION AND PUBLIC WORKS
CITY CAMPUS 2711 W. WELLS ST - 2ND FLOOR MILWAUKEE, WI 53208

Department of Parks, Recreation and Culture
O'Donnell Park: Parking Structure Facade Improvements
910 East Michigan Street, Milwaukee, Wisconsin 53202-5607

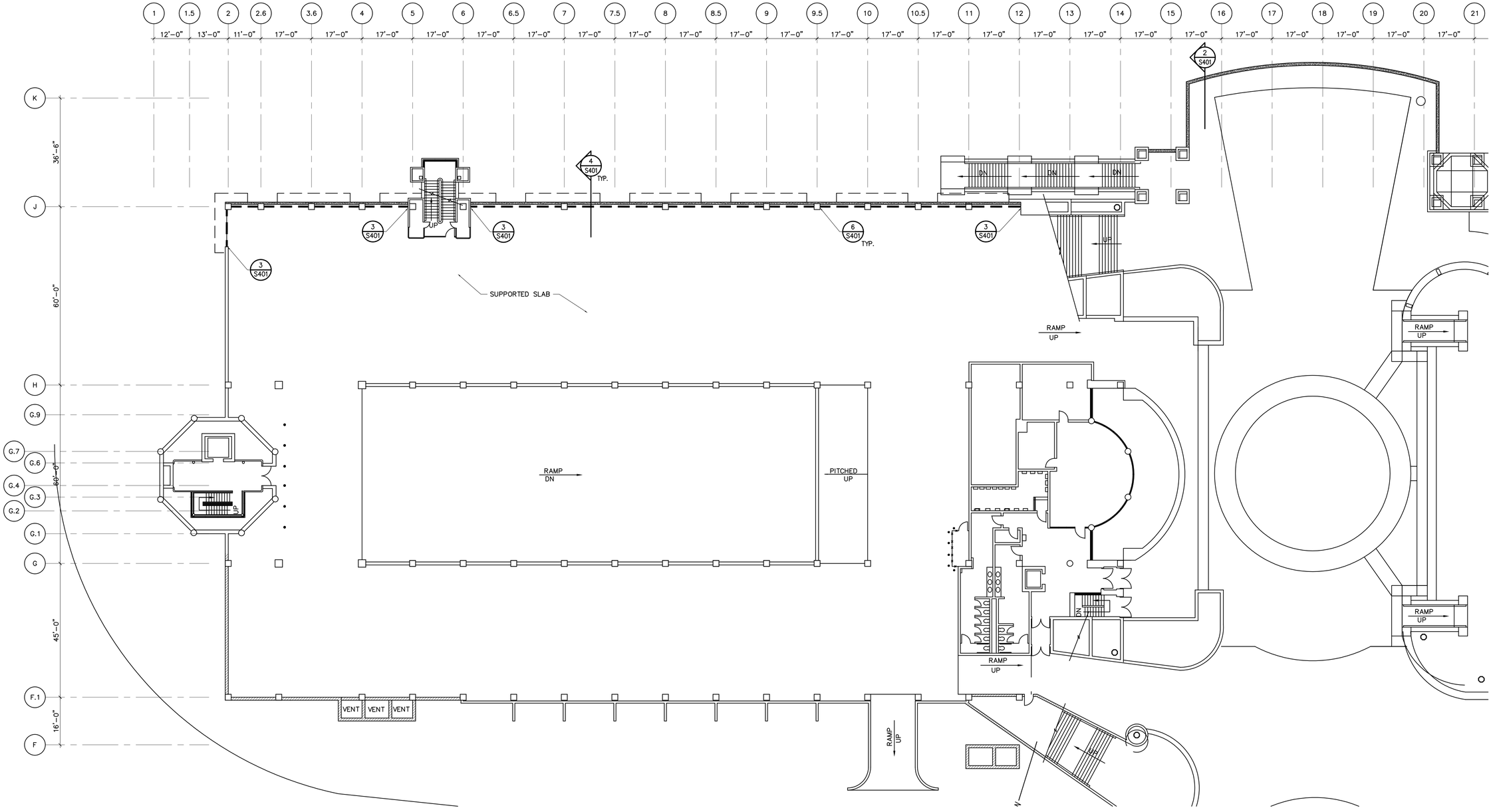

WISCONSIN AVENUE LEVEL
REPAIR PLAN - SECTOR 1
1/16"=1'-0"

North

LEGEND

= INSTALL BARRIER STRANDS PER DETAILS

= REPAIR TOPSIDE OF CONCRETE

= NEW LIGHT POLE BASE

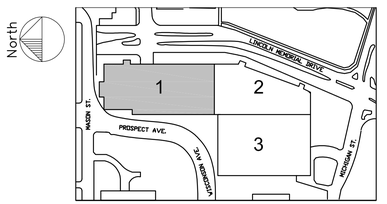

WISCONSIN AVENUE LEVEL
REPAIR PLAN - SECTOR 1

Department of Parks, Recreation and Culture

O'Donnell Park: Parking Structure Facade Improvements

910 East Michigan Street, Milwaukee, Wisconsin 53202-5607

MILWAUKEE COUNTY DEPARTMENT OF TRANSPORTATION AND PUBLIC WORKS
CITY CAMPUS 2711 W. WELLS ST - 2ND FLOOR MILWAUKEE, WI 53208

REVISIONS:
00/00/0000

DATE:
02/22/2011

PROJECT:
W0114-11415

SITE NO:
784

BUILDING NO:
75

S-121

Z:\RST PROJECTS\2010 Projects\R2-2010 Building Facade Projects\R2-2010-070 O'Donnell Park (WAM)\CAD\REPAIR DRAWINGS\S121-S123.dwg

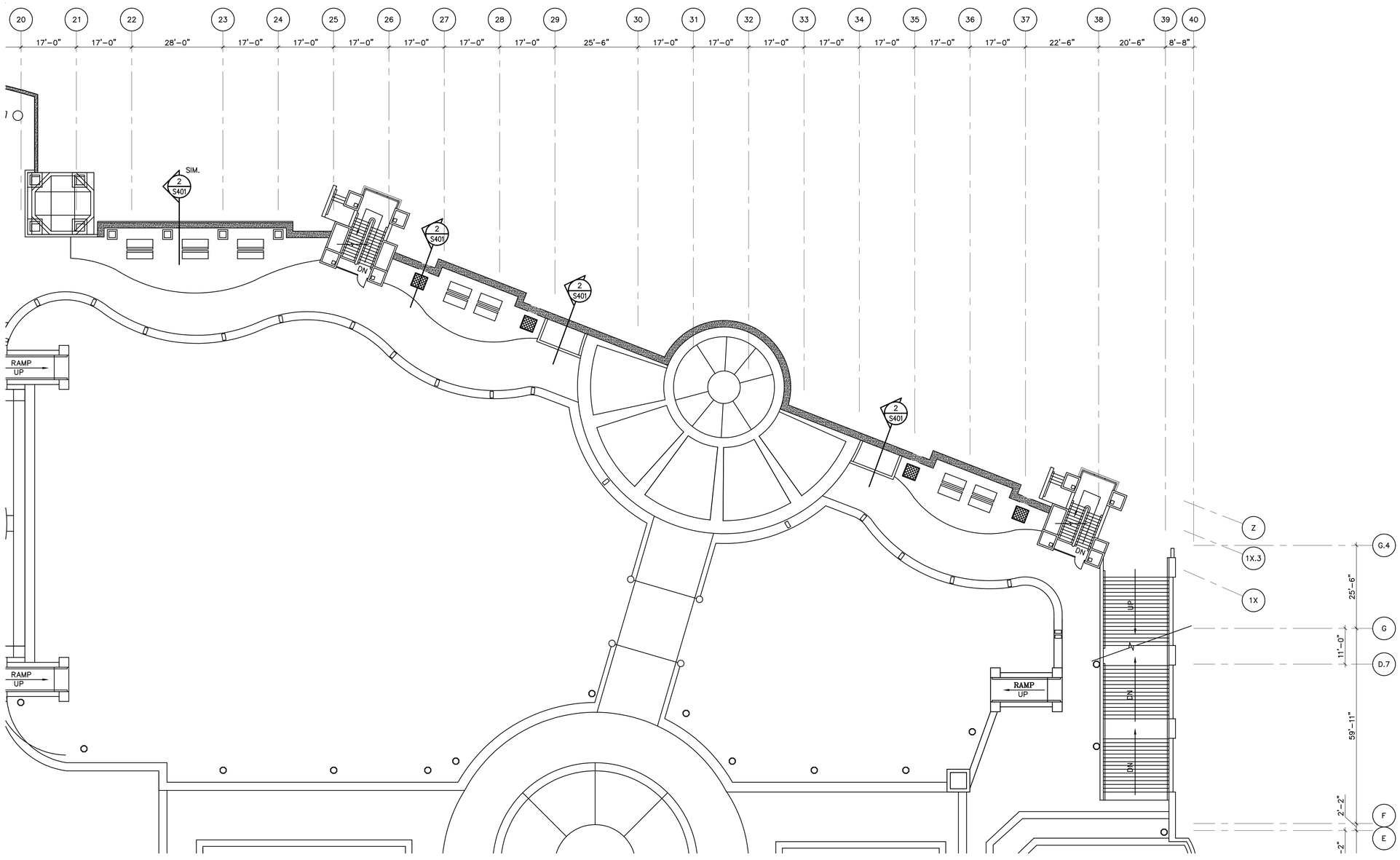

WISCONSIN AVENUE LEVEL
REPAIR PLAN - SECTOR 2
1/16"=1'-0"

North

LEGEND

= REPAIR TOPSIDE OF CONCRETE

= NEW LIGHT POLE BASE

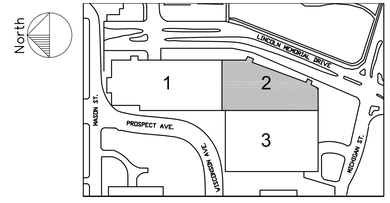

WISCONSIN AVENUE LEVEL
REPAIR PLAN - SECTOR 2

Department of Parks, Recreation and Culture

O'Donnell Park: Parking Structure Facade Improvements

910 East Michigan Street, Milwaukee, Wisconsin 53202-5607

MILWAUKEE COUNTY DEPARTMENT OF TRANSPORTATION AND PUBLIC WORKS
CITY CAMPUS 2711 W. WELLS ST - 2ND FLOOR MILWAUKEE, WI 53208

REVISIONS:
00/00/0000

DATE:
02/22/2011

PROJECT:
W0114-11415

SITE NO:
784

BUILDING NO:
75

S-122

Z:\RST PROJECTS\2010 Projects\R2-2010 Building Facade Projects\R2-2010-070 O'Donnell Park (WAM)\CAD\REPAIR DRAWINGS\S121-S123.dwg

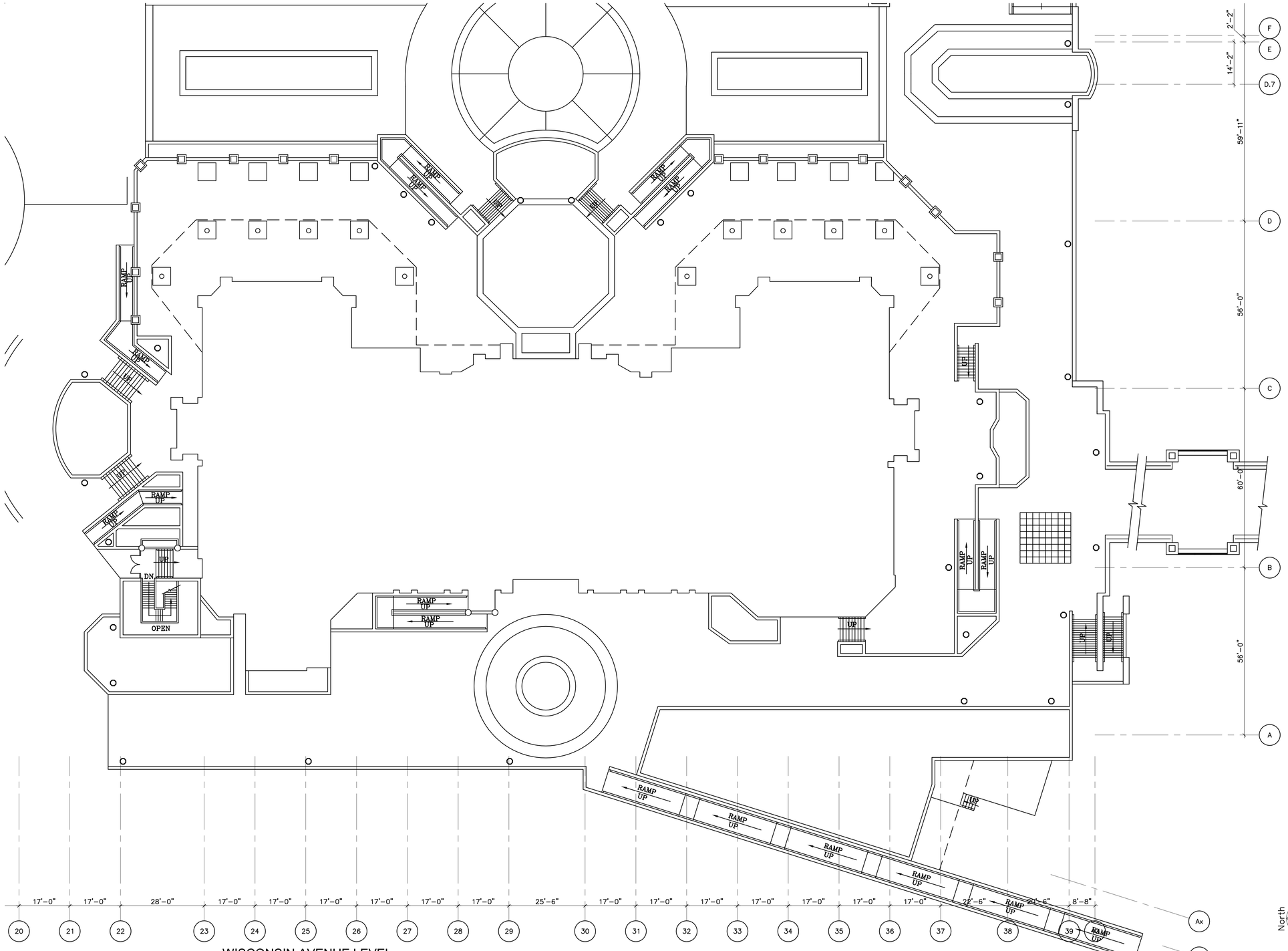

WISCONSIN AVENUE LEVEL
REPAIR PLAN - SECTOR 3
1/16"=1'-0"

North

SHEET NOTES:

1. NO WORK IN THIS AREA.

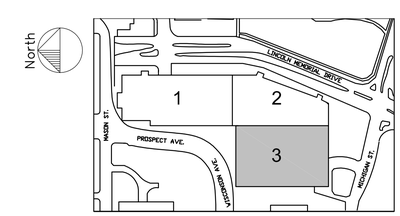

WISCONSIN AVENUE LEVEL
REPAIR PLAN - SECTOR 3

Department of Parks, Recreation and Culture
O'Donnell Park: Parking Structure Facade Improvements
910 East Michigan Street, Milwaukee, Wisconsin 53202-5607

MILWAUKEE COUNTY DEPARTMENT OF TRANSPORTATION AND PUBLIC WORKS
CITY CAMPUS 2711 W. WELLS ST - 2ND FLOOR MILWAUKEE, WI 53208

REVISIONS:
00/00/0000

DATE:
02/22/2011

PROJECT:
W0114-11415

SITE NO:
784

BUILDING NO:
75

S-123

Z:\RST PROJECTS\2010 Projects\R2-2010 Building Facade Projects\R2-2010-070 O'Donnell Park (WAM)\CAD\REPAIR DRAWINGS\S121-S123.dwg

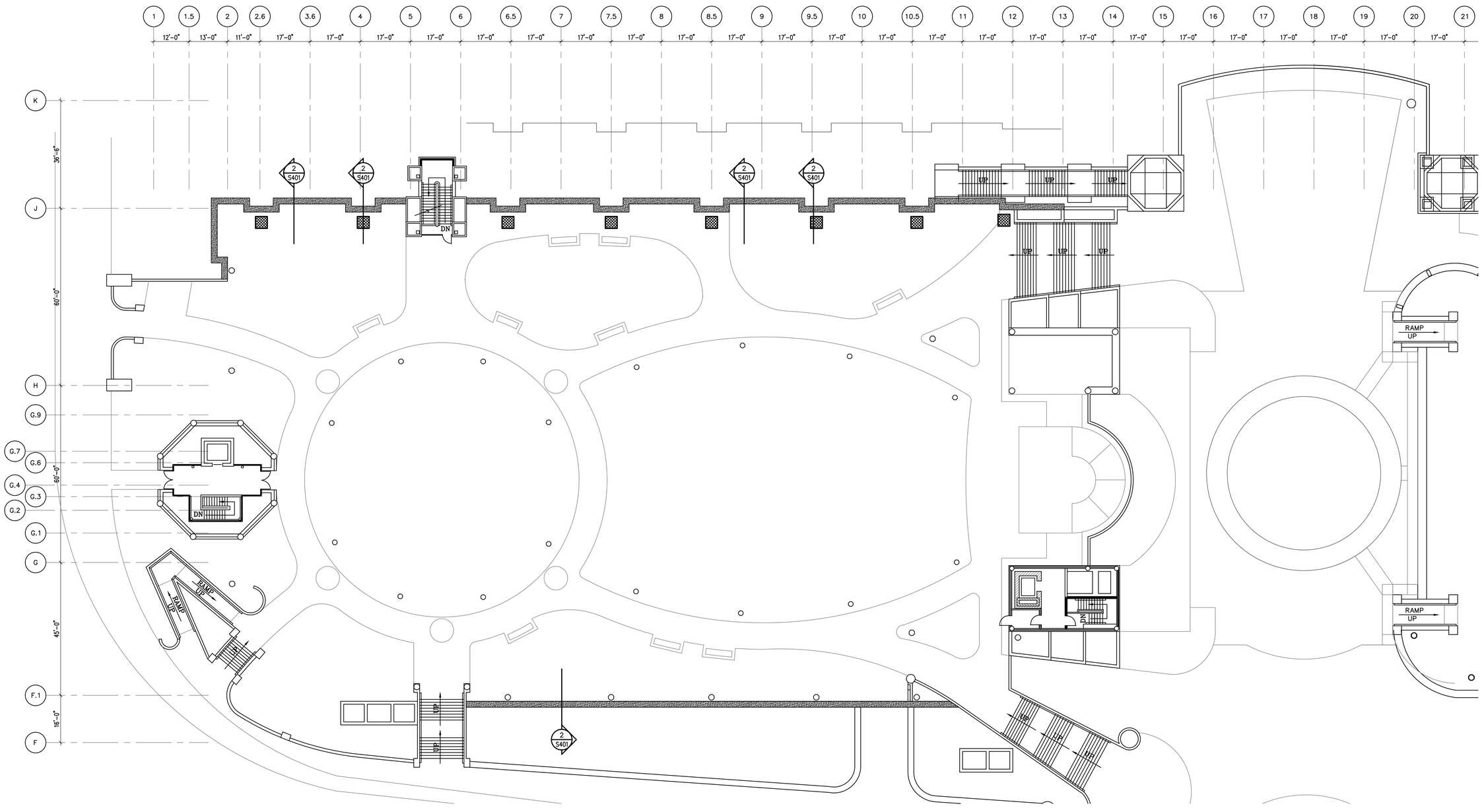

UPPER PLAZA LEVEL
REPAIR PLAN - SECTOR 1

1/16"=1'-0"

North

SHEET NOTES:

1. PROTECT EXISTING STRUCTURE TO REMAIN FROM DAMAGE DURING CONSTRUCTION.
2. FOR GENERAL NOTES, REFER TO SHEET G-001
3. EXISTING STRUCTURE WILL BE CLOSED TO PUBLIC PARKING DURING THE WORK.
4. PROTECT EXISTING LANDSCAPING TO REMAIN.

LEGEND

= REPAIR TOPSIDE OF CONCRETE

= NEW LIGHT POLE BASE

North

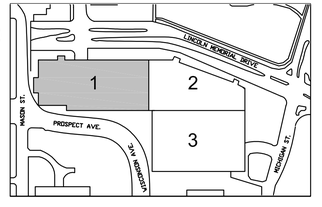

UPPER PLAZA LEVEL REPAIR PLAN - SECTOR 1

Department of Parks, Recreation and Culture

O'Donnell Park: Parking Structure Facade Improvements

910 East Michigan Street, Milwaukee, Wisconsin 53202-5607

MILWAUKEE COUNTY DEPARTMENT OF TRANSPORTATION AND PUBLIC WORKS
CITY CAMPUS 2711 W. WELLS ST - 2ND FLOOR MILWAUKEE, WI 53208

REVISIONS:
00/00/0000

DATE:
02/22/2011

PROJECT:
W0114-11415

SITE NO:
784

BUILDING NO:
75

S-131

Z:\RST PROJECTS\2010 Projects\R2-2010 Building Facade Projects\R2-2010-070 O'Donnell Park (WAM)\CAD\REPAIR DRAWINGS\S131.dwg

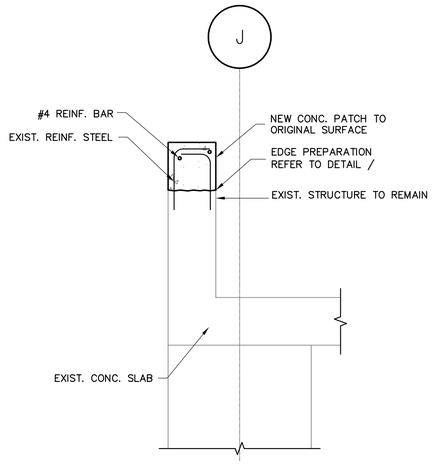

1 CONCRETE REPAIR AT INSPECTION OPENING
1"=1'-0"

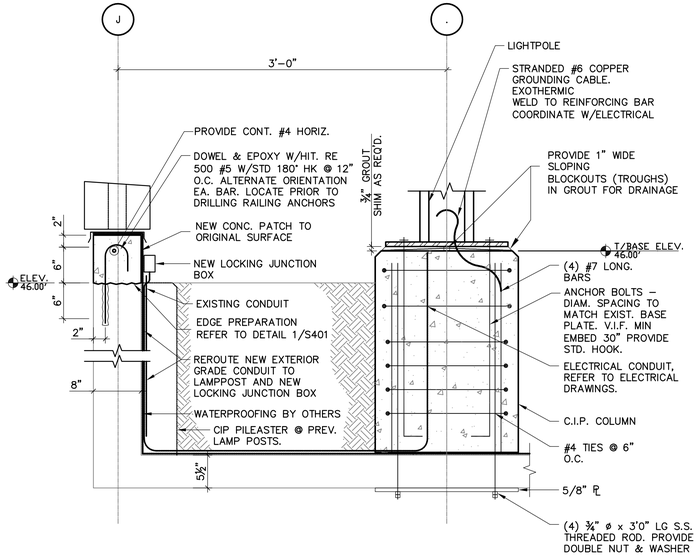

2 REPAIR AT GRADE AND LIGHT POLE BASE DETAIL
1"=1'-0" RMI003

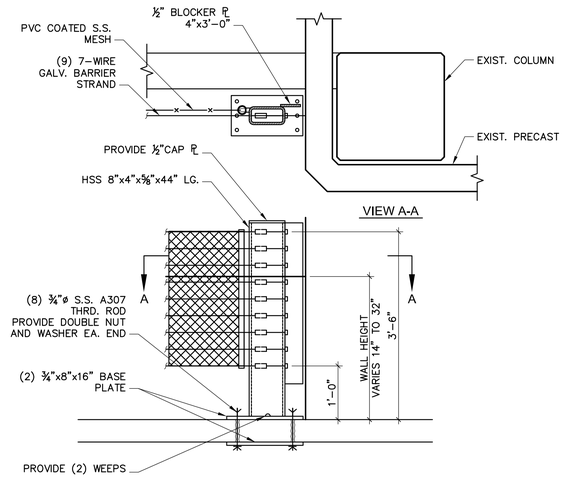

NOTES:
1. LOCATE EXISTING SLAB TENDONS AND REBAR PRIOR TO INSTALLATION OF ANCHORS

3 BARRIER STRAND DETAIL
3/4"=1'-0" SBS001

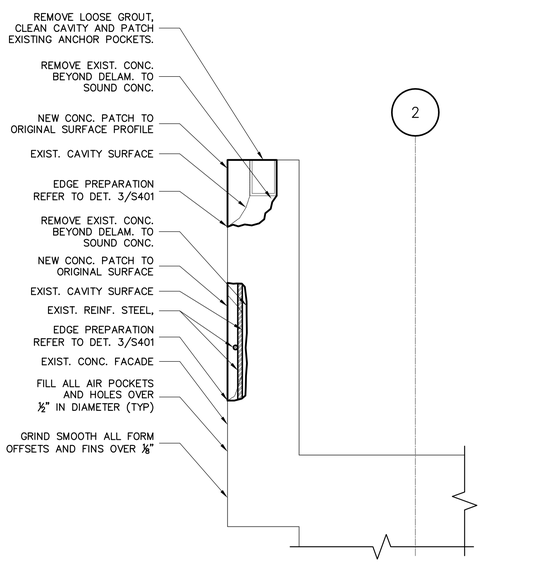

NOTES
1. DETAIL APPLIES TO TOP SURFACE OF WALL, ANCHOR POCKETS, AND DETERIORATED CONCRETE WITH EXPOSED REINF. FOR BOTH BASE BID AND ALTERNATE WORK.
2. DETAIL APPLIES TO ALL SURFACES TO RECEIVE DIRECT APPLIED FINISH SYSTEM SEE ARCHITECTURAL DWGS.

4 CONCRETE REPAIR DETAIL
SCALE 1-1/2" = 1'-0" RMI002

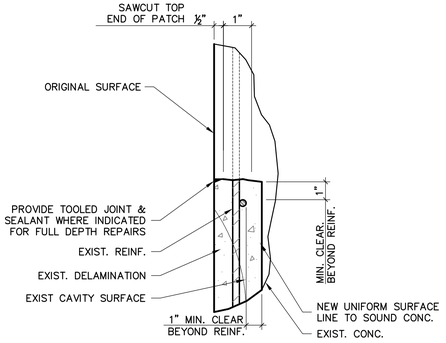

5 CONCRETE REPAIR EDGE PREPARATION DETAIL
3"=1'-0" RMI001

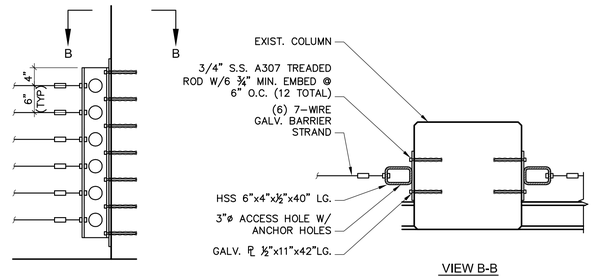

NOTES:
1. LOCATE EXISTING COLUMN REBAR PRIOR TO INSTALLATION OF ANCHORS
2. PVC COATED S.S. MESH NOT SHOWN FOR CLARITY.

6 BARRIER STRAND DETAIL
3/4"=1'-0" SBS001

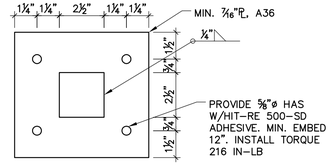

7 PLATE DETAIL
SCALE 3" = 1'-0"

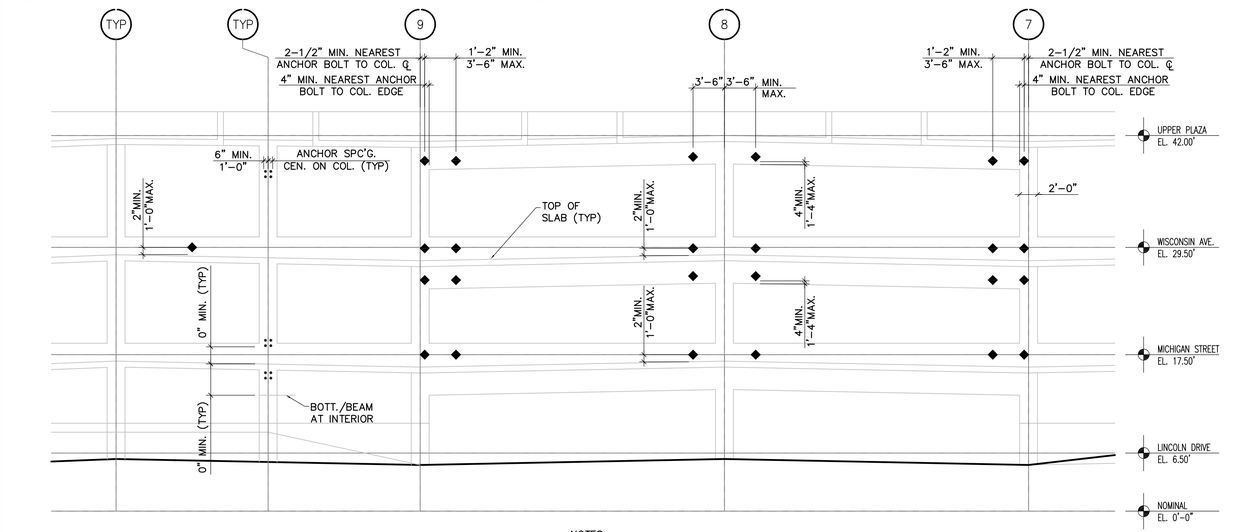

8 CURTAIN WALL LOADING PARAMETERS
1/8"=1'-0"

NOTES:
1. LOCATE EXISTING CONC. REINF. AND P.T. STRANDS, INTERFERENCE/DAMAGE, PRIOR TO LOCATION ANCHORAGE POINTS
2. DO NOT ANCHOR INTO COLUMNS BETWEEN TOP OF SLAB AND BOTTOM OF BEAM ELEVATIONS.

LEGEND
◆ = LATERAL SUPPORT ONLY
:: = GRAVITY LOAD/LATERAL SUPPORT

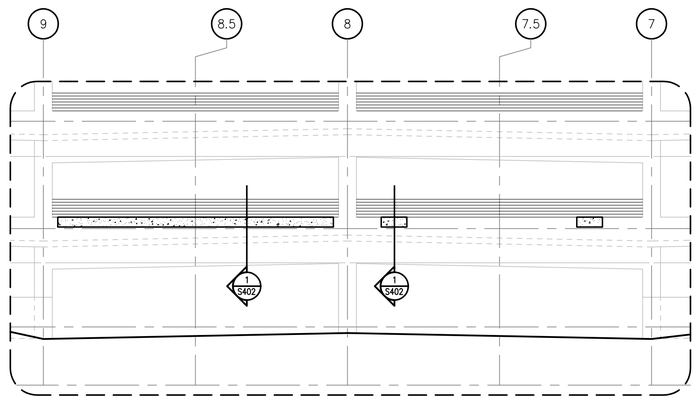

9 ENLARGED ELEVATION
SCALE 3/32" =1'-0" ENLARGED EAST ELEVATION

REPAIR SECTIONS

Department of Parks, Recreation and Culture
O'Donnell Park: Parking Structure Facade Improvements
910 East Michigan Street, Milwaukee, Wisconsin 53202-5607

MILWAUKEE COUNTY DEPARTMENT OF TRANSPORTATION AND PUBLIC WORKS
CITY CAMPUS 2711 W. WELLS ST - 2ND FLOOR MILWAUKEE, WI 53208

REVISIONS:
1 00/00/0000

DATE: **02/22/2011**
PROJECT: **W0114-11415**
SITE NO: **784**
BUILDING NO: **75**

S-401

Z:\RST PROJECTS\2010 Projects\R2-2010 Building Facade Projects\R2-2010-070 ODonnell Park (WAM)\CAD\REPAIR DRAWINGS\S401-402.dwg

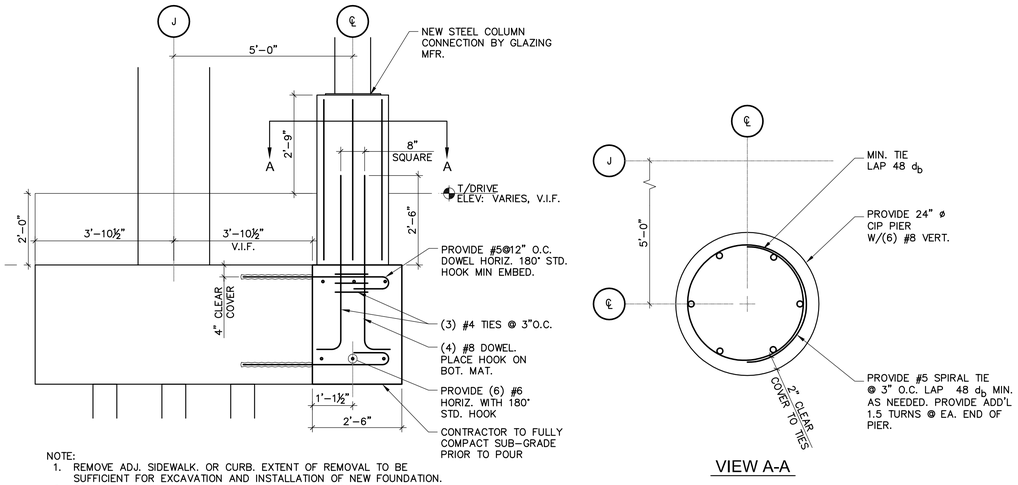

NOTE:
1. REMOVE ADJ. SIDEWALK. OR CURB. EXTENT OF REMOVAL TO BE SUFFICIENT FOR EXCAVATION AND INSTALLATION OF NEW FOUNDATION.
2. REPLACE SIDEWALK/CURBS TO MATCH EXIST. FOLLOWING COMPLETION OF FOUNDATION WORK.

VIEW A-A

1 FOUNDATION DETAIL - ALT.

SCALE 1/2" = 1'–0"

Z:\RST PROJECTS\2010 Projects\R2-2010 Building Facade Projects\R2-2010-070 O'Donnell Park (WAM)\CAD\REPAIR DRAWINGS\S401-402.dwg

Department of Parks, Recreation and Culture

O'Donnell Park: Parking Structure Facade Improvements

910 East Michigan Street, Milwaukee, Wisconsin 53202-5607

MILWAUKEE COUNTY DEPARTMENT OF TRANSPORTATION AND PUBLIC WORKS
CITY CAMPUS 2711 W. WELLS ST - 2ND FLOOR MILWAUKEE, WI 53208

REVISIONS:

1 00/00/0000

DATE: **02/22/2011**

PROJECT: **W0114-11415**

SITE NO: **784**

BUILDING NO: **75**

REPAIR SECTIONS

S-402