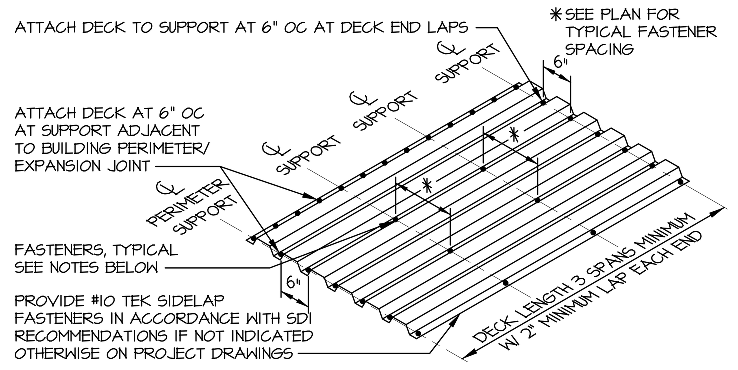

FASTEN DECK TO SUPPORTING MEMBERS USING FASTENING METHOD INDICATED ON DRAWINGS AND ACCORDING TO THE FOLLOWING REQUIREMENTS:

A) WELDING (DEFAULT UNLESS NOTED OTHERWISE): ALL WELDS ARE TO BE 5/8" DIA PUDDLE WELDS. USE WELDING WASHERS ON ALL DECKS EQUAL TO OR LESS THAN 24 GAUGE THICKNESS.
B) SCREWING: BUILDEX #10 TEK SCREWS OR EQUAL
C) POWDER-ACTIVATED FASTENERS: HILTI ENP2 AND 3, RAMSET 265D, OR APPROVED EQUAL (SUBMIT MANUFACTURER LITERATURE FOR APPROVAL ON EQUAL PRIOR TO USING POWDER-ACTIVATED PRODUCT.)
D) PNEUMATICALLY-DRIVEN FASTENERS: PNUETEK PINS OR EQUAL (SUBMIT MANUFACTURERS LITERATURE FOR APPROVAL PRIOR TO USING ANY PNEUMATICALLY-DRIVEN PRODUCT)

1 (S8-10) METAL DECK FASTENING DETAIL
SCALE: NONE

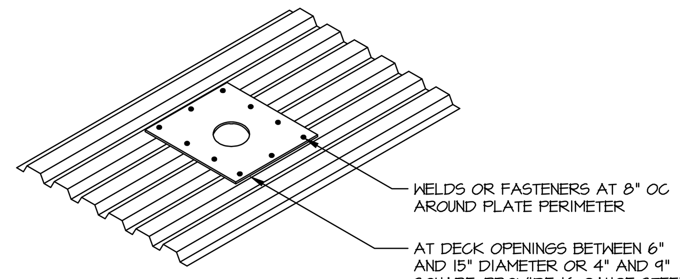

NOTE:
A) NO PLATE REINFORCEMENT REQUIRED AT DECK OPENINGS SMALLER THAN 6" DIAMETER OR 4" SQUARE.
B) FOR DECK OPENINGS LARGER THAN 13" DIAMETER OR 9" SQUARE, PROVIDE STEEL FRAME PER TYPICAL FRAMING AT ROOF OPENINGS DETAIL.

2 (S8-10) TYPICAL ROOF DECK OPENING
SCALE: 1"=1'-0"

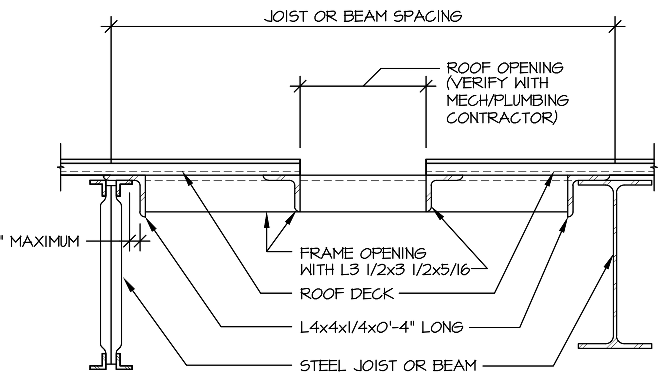

NOTE:
GC TO VERIFY SIZE, SHAPE AND LOCATION OF ALL ROOF OPENINGS WITH APPROPRIATE TRADES PROVIDING TYPICAL FRAME AT ALL OPENINGS:
1) LARGER THAN 13" DIAMETER OR 9" SQUARE OR
OR
2) SUPPORTING IN EXCESS OF 60 LBS EQUIPMENT LOADS

3 (S8-10) TYPICAL FRAMING AT ROOF OPENINGS
SCALE: NONE

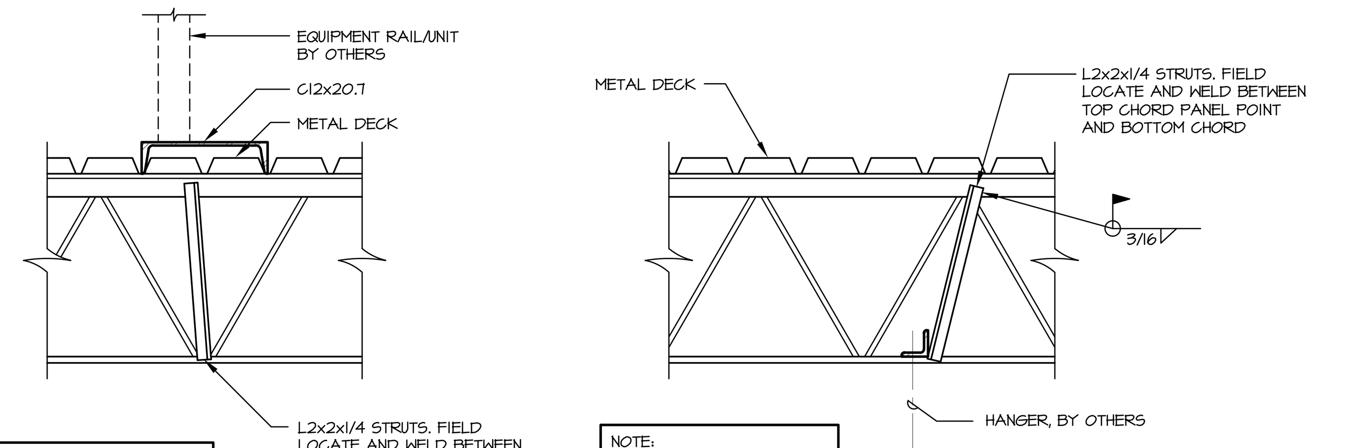

NOTE:
REINFORCE TOP CHORDS AT CONCENTRATED LOADS BETWEEN PANEL POINTS AS SHOWN

NOTE:
REINFORCEMENT REQUIRED AT ALL HANGING LOADS BETWEEN BOTTOM CHORD PANEL POINTS AND AS NOTED ON PLAN

NOTE:
PRIOR TO INSTALLATION, VERIFY LOADS WITH ENGINEER IF ACTUAL DIFFERENT FROM THOSE POSTED ON DRAWINGS

4 (S8-10) CONCENTRATED LOAD AT JOIST
SCALE: NONE

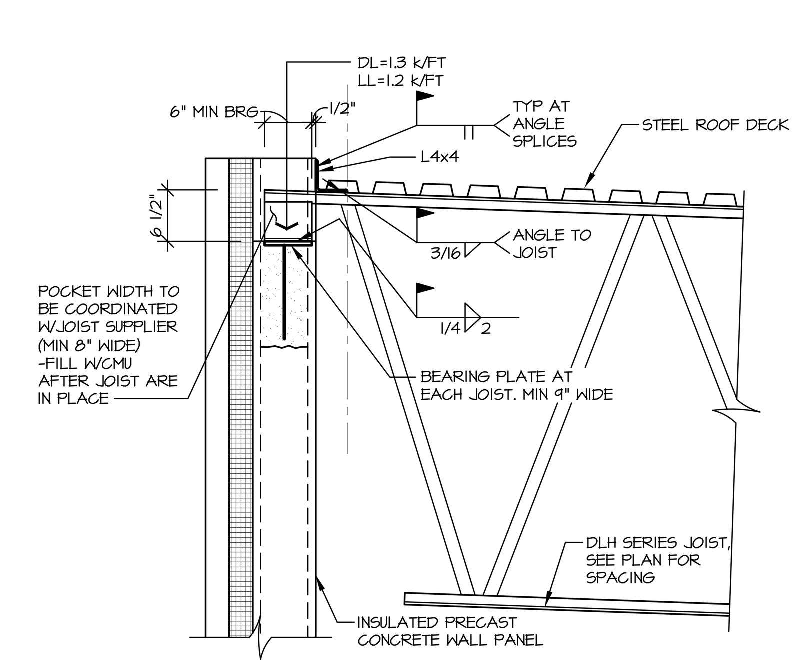

5 (S8-10) JOIST BEARING AT PANEL
SCALE: 3/4"=1'-0"

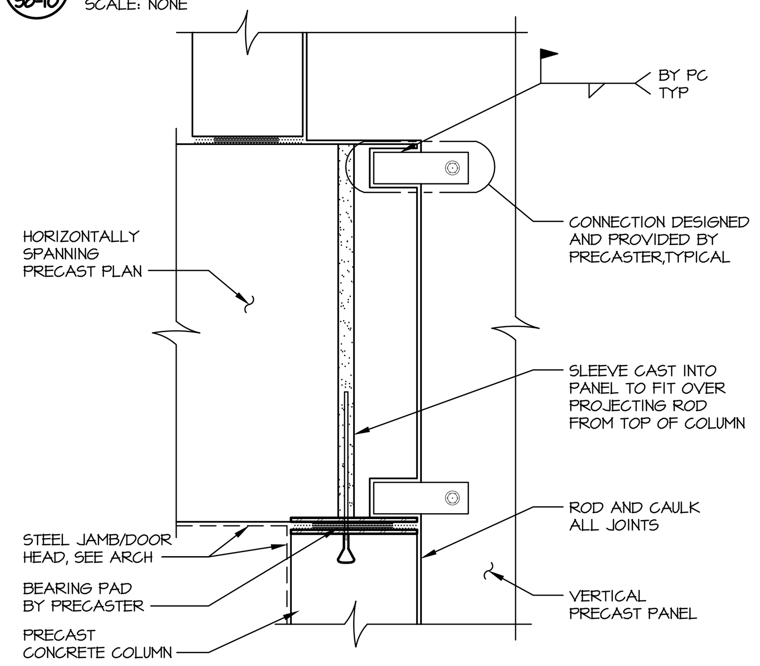

6 (S8-10) PRECAST PANEL AT PRECAST COLUMN
SCALE: 3/4"=1'-0"

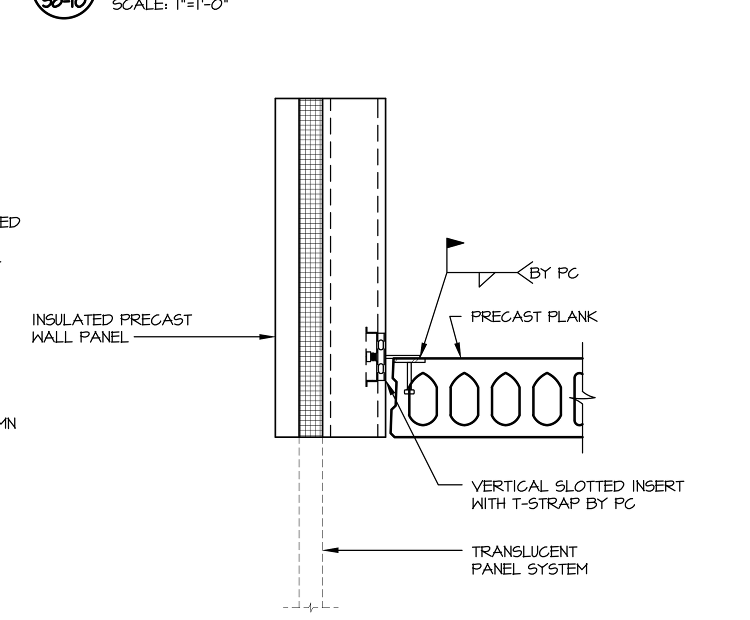

7 (S8-10) PRECAST PLANK AT WASH BAY
SCALE: 3/4"=1'-0"

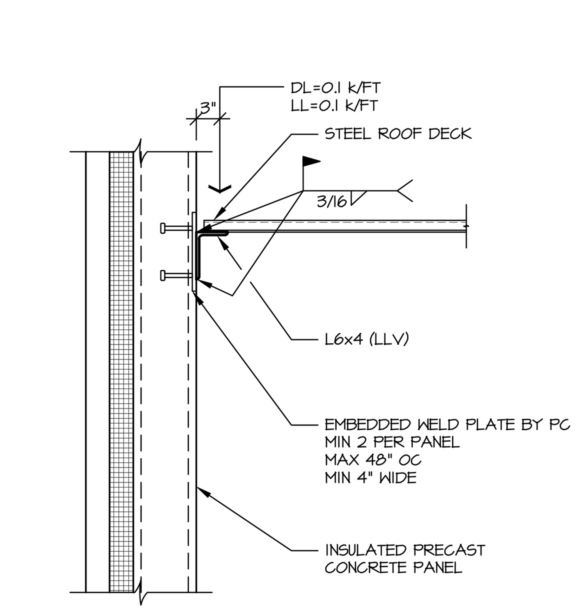

8 (S8-10) ROOF TO WALL PANEL CONNECTION
SCALE: 3/4" = 1'-0"

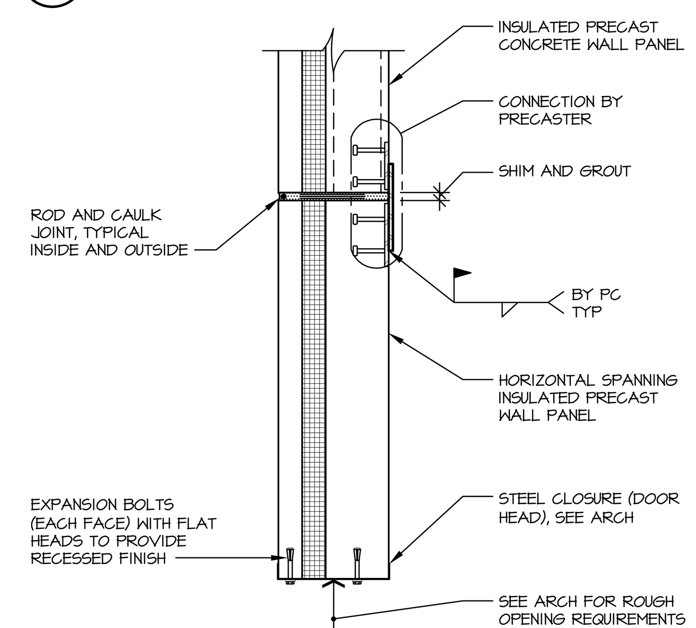

9 (S8-10) PRECAST PANEL AT OVERHEAD DOOR
SCALE: 3/4"=1'-0"

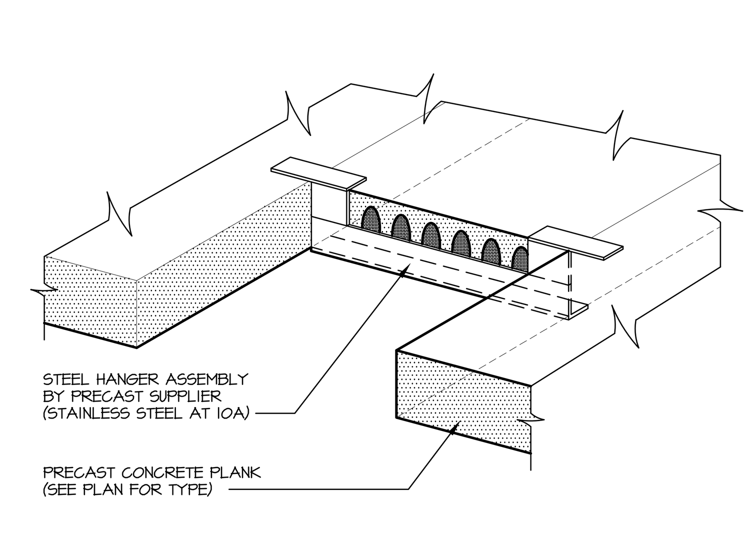

10 (S8-10) 10A (S8-10) PRECAST PLANK HANGER DETAIL
SCALE: NONE

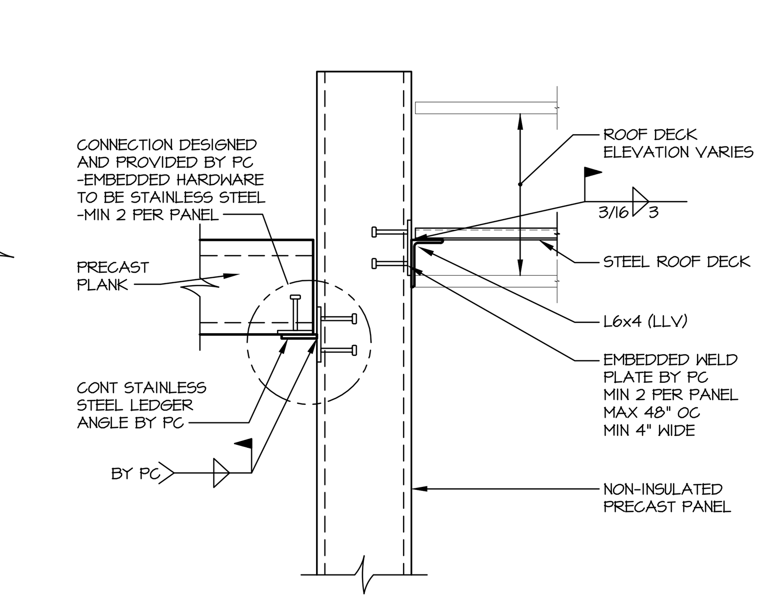

11 (S8-10) PRECAST BEARING AT INTERIOR WALL
SCALE: 3/4"=1'-0"

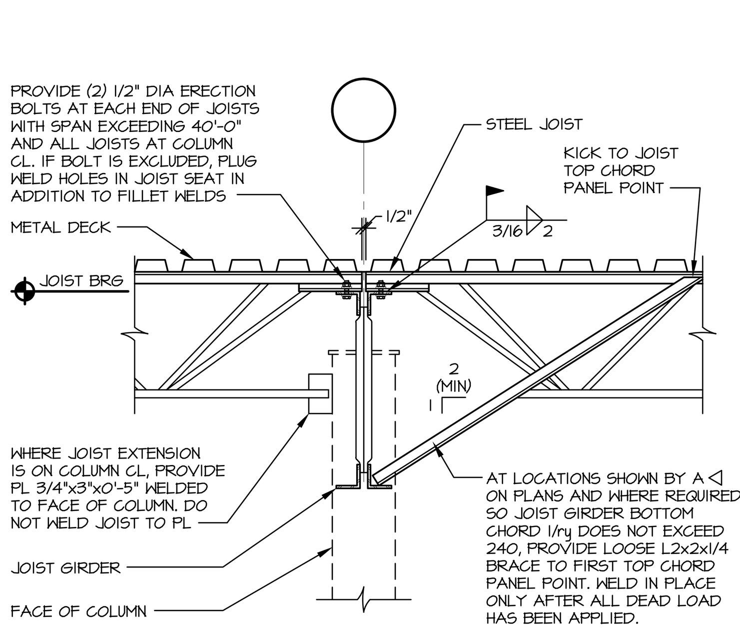

12 (S8-10) BAR JOIST ON JOIST GIRDER
SCALE: NONE

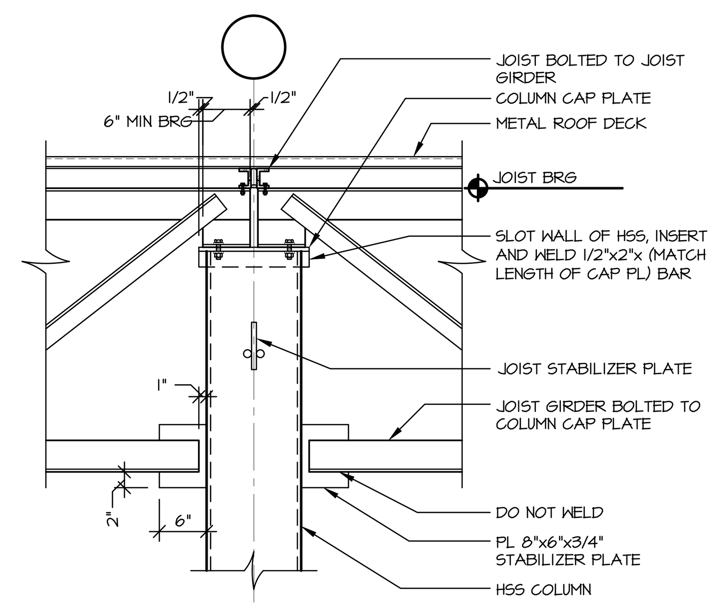

13 (S8-10) JOIST GIRDER BEARING ON HSS COLUMN
SCALE: NONE

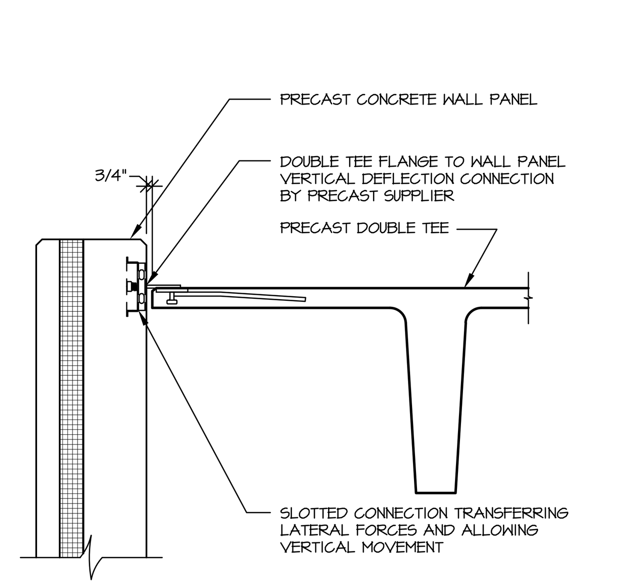

14 (S8-10) DOUBLE TEE AT PRECAST WALL PANEL
SCALE: 3/4"=1'-0"

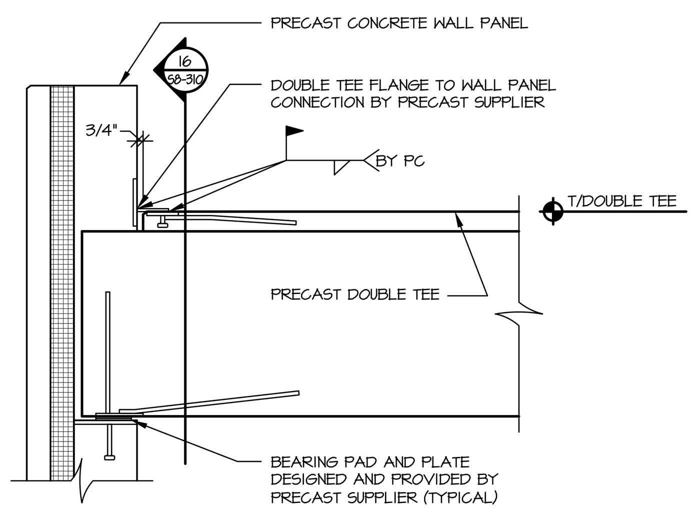

15 (S8-10) DOUBLE TEE BEARING ON WALL PANEL
SCALE: 3/4"=1'-0"

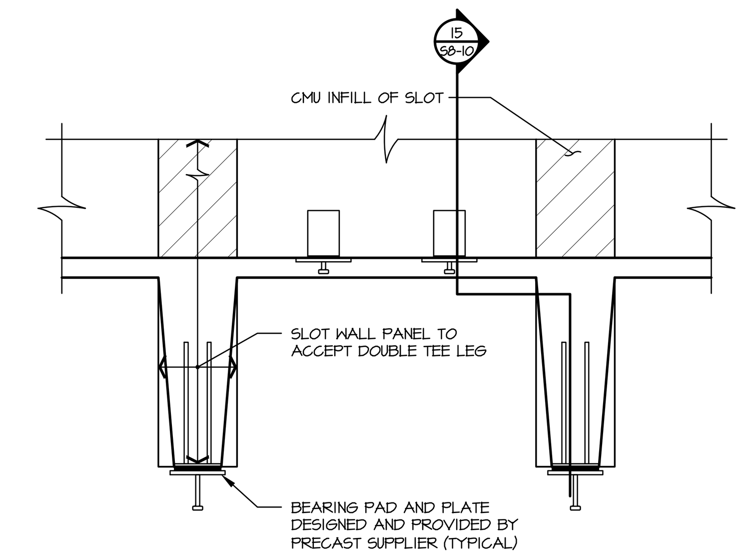

16 (S8-10) DOUBLE TEE BEARING ON WALL PANEL
SCALE: 3/4"=1'-0"

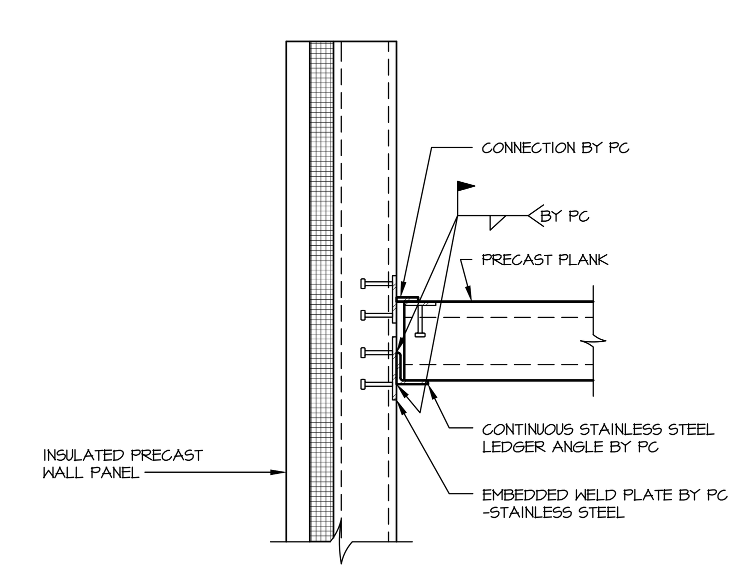

17 (S8-10) PRECAST BEARING AT WASH BAY
SCALE: 3/4"=1'-0"

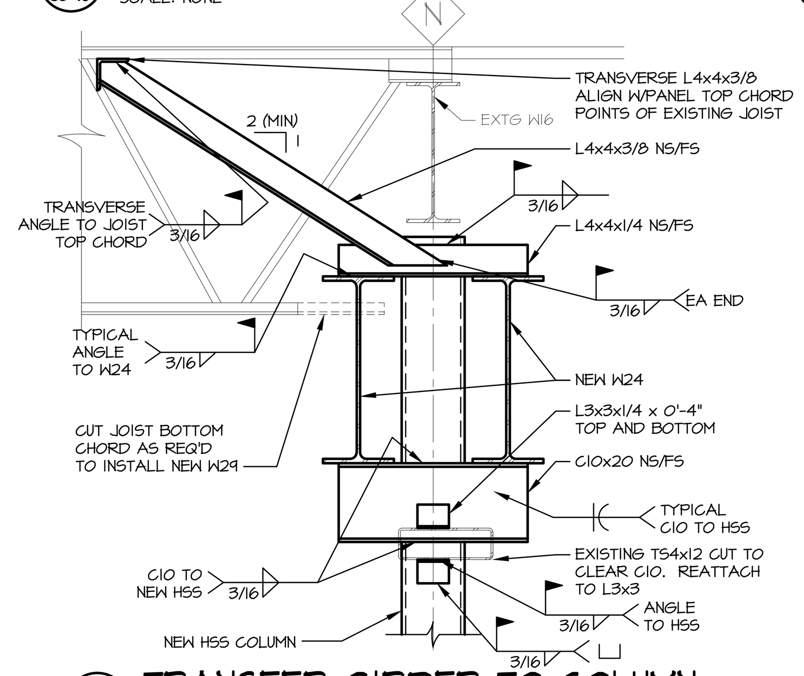

18 (S8-10) TRANSFER GIRDER TO COLUMN
SCALE: 3/4"=1'-0"

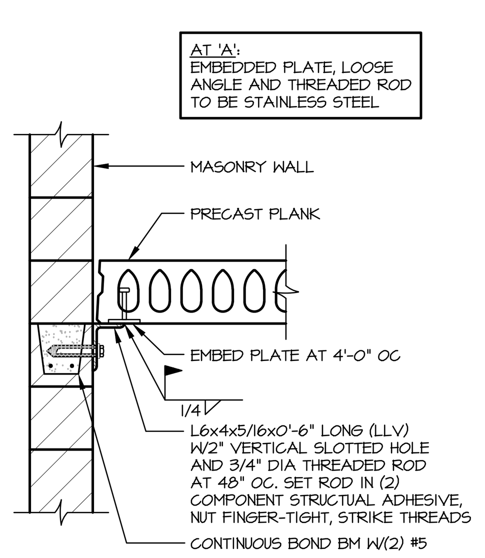

19 (S8-10) 19A (S8-10) PRECAST PLANK DETAIL AT NON-BEARING MASONRY WALL
SCALE: 3/4" = 1'-0"

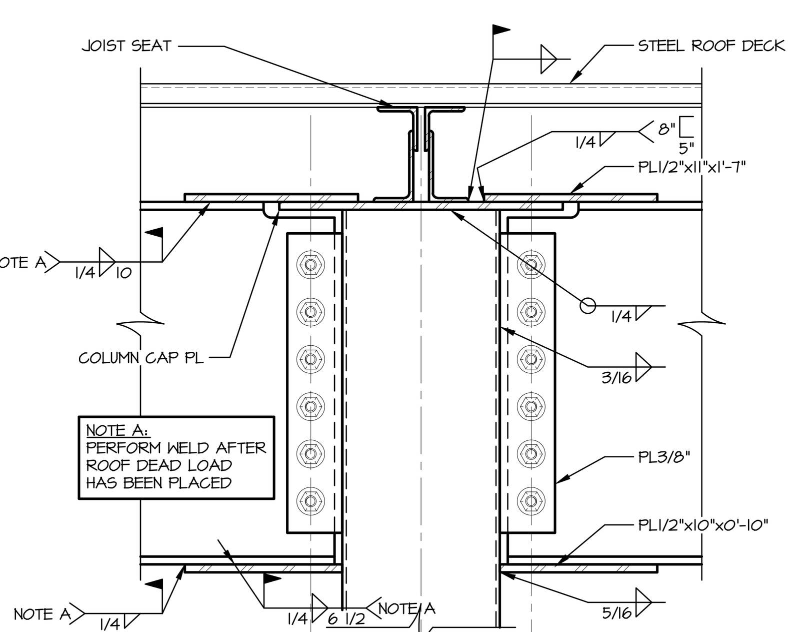

20 (S8-10) SECTION
SCALE: 1 1/2" = 1'-0"

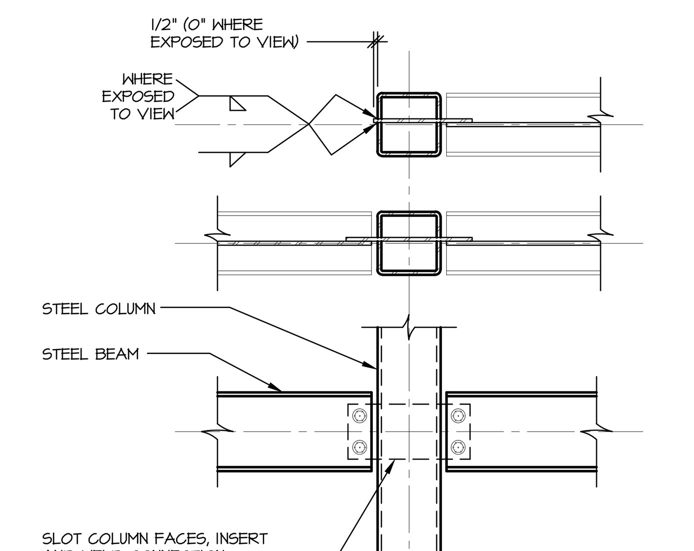

21 (S8-10) BEAM-TO-HSS COLUMN
SCALE: 3/4" = 1'-0"

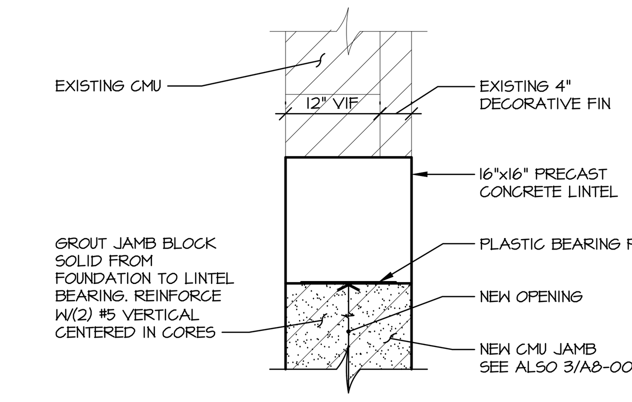

22 (S8-10) LINTEL IN EXISTING WALL
SCALE: 3/4" = 1'-0"

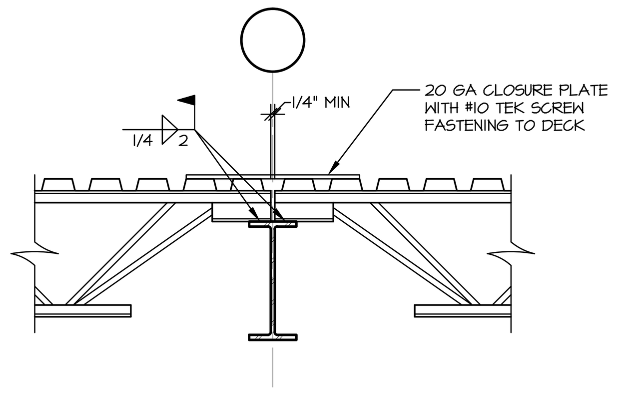

23 (S8-10) BAR JOIST OVER BEAM SUPPORT
SCALE: 3/4"=1'-0"

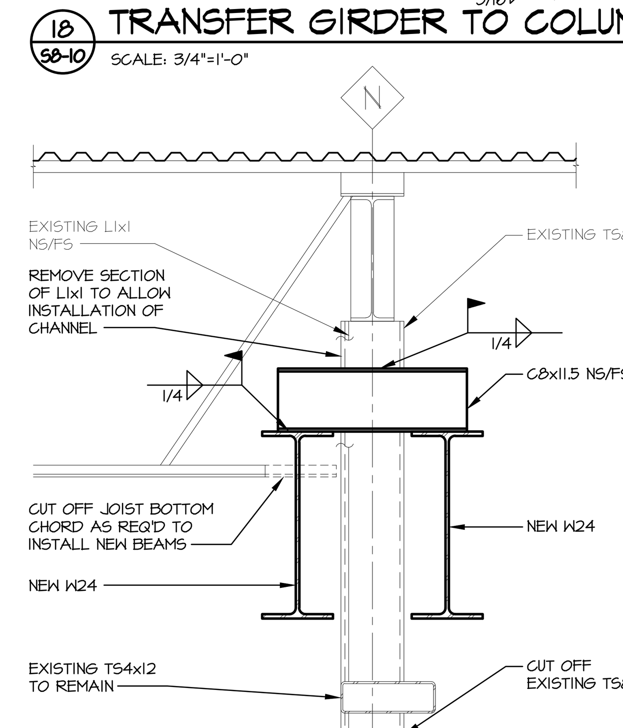

25 (S8-10) SUPPORT FOR CUT-OFF COLUMN
SCALE: 3/4"=1'-0"

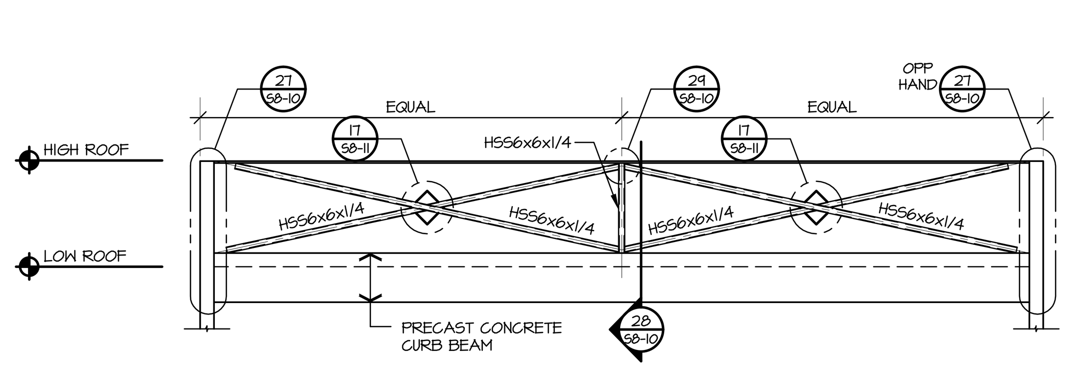

26 (S8-10) CLERESTORY X-BRACING ELEVATION
SCALE: 3/32" = 1'-0"

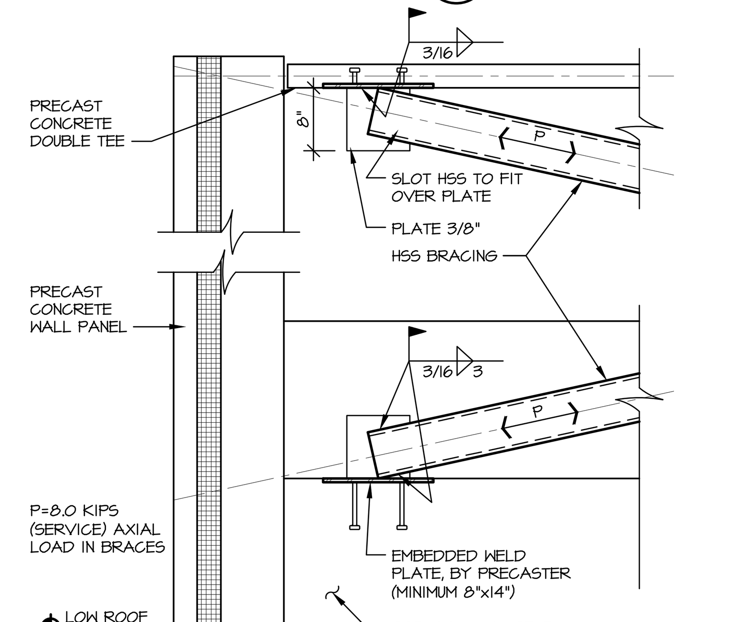

27 (S8-10) X-BRACING END CONNECTION
SCALE: 3/4"=1'-0"

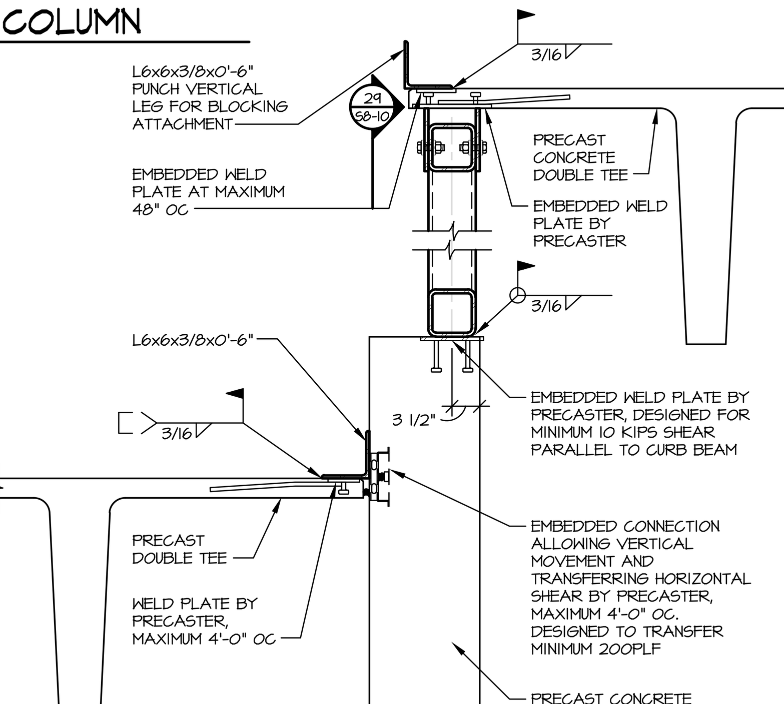

28 (S8-10) X-BRACING MID CONNECTION
SCALE: 3/4"=1'-0"

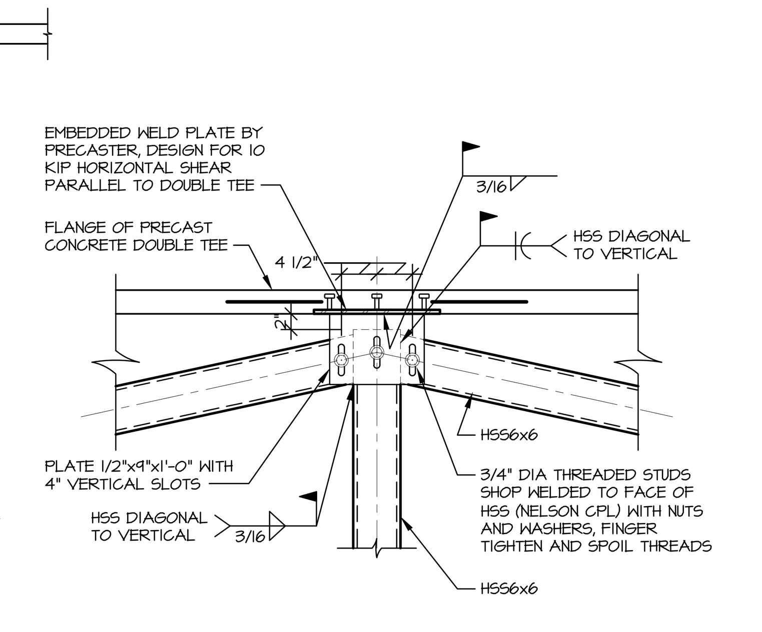

29 (S8-10) X-BRACING MID CONNECTION (TOP)
SCALE: 3/4"=1'-0"

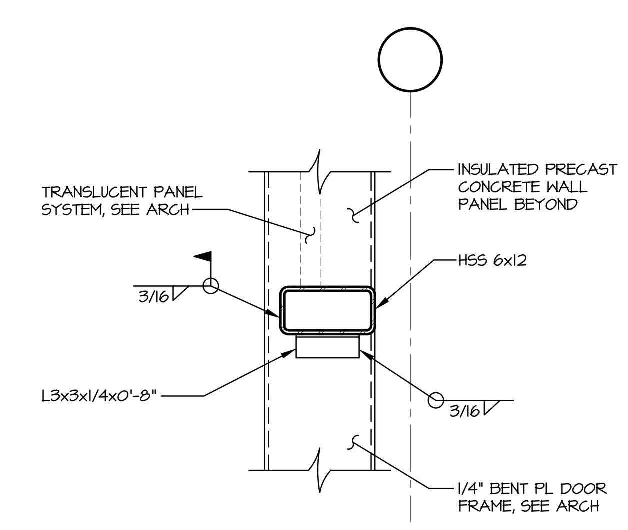

30 (S8-10) OVERHEAD DOOR HEAD
SCALE: 3/4"=1'-0"

GENERAL MITCHELL INTERNATIONAL AIRPORT
SNOW EQUIPMENT BUILDING, FLEET MAINTENANCE BAY & ABRASIVE STORAGE BUILDING
MILWAUKEE, WI

MILWAUKEE COUNTY DEPARTMENT OF ADMINISTRATIVE SERVICES
FACILITIES MANAGEMENT ARCHITECTURAL ENGINEERING & ES
GENERAL MITCHELL INTERNATIONAL AIRPORT 5300 SOUTH HOWELL AVENUE MILWAUKEE, WI 53207

REVISIONS:

DATE: 02/29/2012

PROJECT: WA148011 WA149011 WA022011

SITE NO: 290

BUILDING NO: N/A

ARNOLD AND O'SHERIDAN INC
CONSULTING ENGINEERS
MADISON, WISCONSIN (608) 821-8500
BROOKFIELD, WISCONSIN (262) 783-6130
WWW.ARNOLDANDOSHERIDAN.COM
PROJECT NUMBER: 101208
AMERICAN DESIGN INCORPORATED Architectural Services
SEH

DETAILS

S8-10

I:\2010\101208\Drawing\Structural\S8-10.dwg