**Project No. V025-13807**
**ADDENDUM NO. 3**
**Rawson Avenue Storm Water Lift Station**
**700 West Rawson Avenue, Oak Creek, WI**

**Project No.: V025-13807**
**Date of Addendum: 10/2/13**

This Addendum to the Contract Documents is issued to modify, explain, or correct the original documents, dated 9/13/13, and is hereby made part of the Contract Documents. Acknowledge receipt of this Addendum in the space provided on the Bid Form, or bid may be rejected.

Refer to the following project website to see a PDF version of Addendum No. 3 and to obtain full-size PDFs of all changed drawings: http://county.milwaukee.gov/ConstructionBidsandR23075/Rawson-Avenue-Lift-Station.htm

**DOCUMENT 00410 – BID FORM**

Remove1. Remove the "Commencement and Completion of Contract Work" subsection on page 00410-2 in its entirety and replace with the following:

"The undersigned agrees, if signatory to the Contract, to commence work upon receipt of Notice to Proceed and achieve Substantial Completion of the Work by March 10, 2014.

1) "High Water" warning signs operational by November 27, 2013.

2) Lift station operational by March 10, 2014.

3) Ditch improvements operational by March 10, 2014. If permit approvals are not obtained by OWNER by December 1, 2013, ditch (swale) improvements work schedule will be extended to allow ditch work to be substantially completed by June 30, 2014.

**(NOTE! See Document 00800 – Supplementary Conditions – 5.C.12.07, for Liquidated Damages associated with the contract work.)"**

Remove 2: Schedule of Prices: Remove the Schedule of Prices form in its entirety and replace with the attached Schedule of Prices. The changes are:

a. Delete "Alternative Bid Item 1 Deduct Dual Electrical Feed Service, Lump Sum" in its entirety, and replace with "Alternative Bid Item 1 Add Temporary Storm Water Pumping, Lump Sum."

b. Include "Alternative Bid Item 6 Deduct for Substantial Completion Extended to April 30, 2014, Lump Sum." The attached Document 00410 includes an updated Schedule of Prices.

Attachment A is a sample Schedule of Prices Form.

Attachment B is the Schedule of Prices form to be submitted as part of Document 00410 – Bid Form for the Bid.

**SECTION 01110 – SUMMARY OF WORK**

Remove 1: Delete the sentence in Article 1.04.A.1 in its entirety, and replace with the following: "1.04.A.1 Electric Utility will invoice OWNER directly for electric power service to point of termination and includes meters at locations as shown on Drawings and described in Section 16210. OWNER is responsible for direct payment to Electric Utility."

Add 2: Add the following to Article 1.06: "H. Excavation of embankment is allowable to construct lift station and thereby avoid or minimize need for sheet piling on south side of structure. CONTRACTOR is responsible for backfilling and restoring excavation to original grades. Seed and mulch as part of restoration. Maintain appropriate distance from power poles and wires to comply with We Energies requirements. Refer to Attachment C for a sketch showing approximate excavation limits of south side of lift station."

**SECTION 01230 – ALTERNATE BID ITEMS**

Remove 1: Delete Article 3.01.A "Alternative Bid Item 1: Deduct Dual Electrical Feed Service" in its entirety, and replace with "Alternative Bid Item 1: Add Temporary Storm Water Pumping, Lump Sum."

"1. Perform storm water pumping using existing lift station during construction starting from Notice to Proceed and continuing until new pumps are operational and on-line.
2. Perform pumping to avoid Rawson Avenue from getting build-up of water on road surface. Note: Existing pumps are not operational, and are 5,200 gpm at about 44 ft TDH each. Existing pumps are dry pit type, and normally 1 pump operated at a time. Pump into existing discharge manhole or new discharge chamber located at top of hill. Provide hose/piping. Existing electrical service is 3-phase, 230-v. New electrical service will be 3-phase, 480-v. There is access manhole cover over wet well to drop hose into wet well.
3. Maintain pumping capability on 24-hour, 7-day basis to avoid Rawson Avenue from getting build-up of water on road surface.
4. Alternate 1 requires CONTRACTOR to perform temporary storm water pumping during construction instead of OWNER performing Work.
5. Alternate 1 is add to Contract Price, lump sum."

Add 2: Add Article 3.01.F "Alternative Bid Item 6: Deduct for Extended Substantial Completion Date to April 30, 2014, Lump Sum.

"1. Provide deduct if Substantial Completion Date is extended to April 30, 2014. Storm water pumps must be operational at Substantial Completion.
2. Alternate 6 is deduct to Contract Price, lump sum."

**SECTION 01340 - SUBMITTALS**

Delete the table at the end of Section 01340 and replace with the revised table attached.

**SECTION 11312 – SUBMERSIBLE NONCLOG PUMPS**

Add the following: "Article 1.01.B.: Two storm water pumps as described in Schedule 1 and associated controls are furnished by Milwaukee County and are to be installed by CONTRACTOR. Refer to Section 01110 for CONTRACTOR requirements and Appendix A. Approximate size for

electrical equipment is shown on electrical drawings. Literature on pumps is provided in Appendix A."

**ELECTRICAL WORK REVISIONS**

Provide the following changes to contract electrical work:

1. Removal of dual utility feed including overhead feeders, meter sockets, 400-amp disconnects, MCC included automatic transfer switch, and MCC main lug compartment from design.

2. Inclusion of new MCC 400-amp trip main incoming circuit breaker compartment, 4#600 kcmil, 1#1/0 ground conductors (copper) in 4-in. conduit to contractor supplied We Energies approved 400-amp trans socket, 4-in. concrete encased underground conduit (refer to included detail 10-262) containing 4#600 kcmil, 1#1/0 to We Energies furnished and installed pad for We Energies furnished and installed pad-mounted transformer (refer to included detail 10-271).

3. Transformer pad to be located east of wet well per We Energies.

**SECTION 16415 – TRANSFER SWITCHES**

Delete Section 16415 – Transfer Switches in its entirety.

**SECTION 16443 – MOTOR-CONTROL CENTERS**

Delete the following sentence in Article 1.01.A.1 "Refer to Section 16415 for transfer switch requirements."

**DRAWINGS**

Refer to project website noted at beginning of this Addendum for PDFs of drawings in full size.

**DRAWING 02-C-05**

Delete Drawing No. 02-C-05 in its entirety and replace with the attached revised Drawing 02-C-05. The revisions relate to the proposed storm sewer location, and shows the proposed location for transformer pad.

**DRAWING 99-C-01**

Delete Detail 02-401 on Drawing 99-C-01 and replace with the attached Detail 02-401.

**DRAWING 10-E-01**

Add approximate location of utility supplied transformer pad.

**DRAWING 30-E-01**

Two meter sockets, two 400-amp disconnects, and transfer switch portion of MCC to be removed from design. New 400-amp trans socket may be placed on north side of building for ease of underground concrete encased conduit to transformer pad.

**Drawing 99-E-01**

One utility overhead feed, meter, 400-amp disconnect, and portion of automatic transfer switch are to be deleted. Other utility feed to be marked as underground to utility provided pad-mounted transformer, meter socket to be marked 400-amp trans socket, 400-amp disconnect removed, breaker to be changed to 400-amp trip MCC main. 4#250, 1#2 GRD in 2-1/2-in.C to be 4#600, 1#1/0 GRD, in a 4-in. C.

**DRAWING 99-E-03**

Add detail 10-262.

**ATTACHMENTS:**

Attachment A – Schedule of Prices Sample
Attachment B – Schedule of Prices – To Be Used For Bid
Attachment C – Sketch - Excavation Limits
Attachment D – Section 01340 – Submittals Table
Drawing 02-C-05
Drawing 99-C-01
Drawing 10-E-01
Drawing 30-E-01
Drawing 99-E-01
Drawing 99-E-03

END OF ADDENDUM NO. 3

# ATTACHMENT A

**PROJECT NO. V025-13807**
**SCHEDULE OF PRICES**
**FOR: Rawson Avenue Lift Station**
**AT: 700 West Rawson Avenue**
**Milwaukee, Wisconsin**

**Note: Bidder must state prices in words and figures and sign proposal.**

| Item No. | Quantity | Items Bid Price Written in Words | Total Amount of Bid |
|---|---|---|---|
| **BASE BID** | | | |
| 1 | 1 Lump Sum | Storm Water Lift Station Project as Defined in Project Documents<br>Per Lump Sum | |
| 2 | 1 Lump Sum | Allowance as Defined in Project Documents<br>Fifty Thousand Dollars and No/100<br>Per Lump Sum | $50,000.00 |

**BASE BID**
Total amount for items one (1) through two (2) inclusive.

Dollars $

Alternative Bids: All bidders shall fill in all the Alternative Bids as listed. Failure of a bidder to fill in an alternative bid will be cause for the owner to disqualify bid. Where no change in price occurs or the Alternative Bid does not affect the particular Bid, mark "No Change". If any Alternative Bid is left blank, it shall mean the Contractor has no addition or deduction in the contract.

**ALTERNATIVE BID ITEMS**

| | | | |
|---|---|---|---|
| 1 | 1 Lump Sum | Add Temporary Storm Water Pumping, Lump Sum<br>Per Lump Sum | Add $ |
| 2 | 1 Lump Sum | Deduct Replacement Storm Sewer in Railroad Right-of-Way, Lump Sum<br>Per Lump Sum | (Deduct) $ |
| 3 | 1 Lump Sum | Deduct Ditch (Swale) Improvements in Railroad Right-of-Way, Lump Sum<br>Per Lump Sum | (Deduct) $ |
| 4 | 1 Lump Sum | Deduct Existing Lift Station Demolition, Lump Sum<br>Per Lump Sum | (Deduct) $ |
| 5 | 1 Lump Sum | Deduct High Water Warning Signs, Lump Sum<br>Per Lump Sum | (Deduct) $ |
| 6 | 1 Lump Sum | Deduct for Substantial Completion Extended to April 30, 2014, Lump Sum<br>Per Lump Sum | (Deduct) $ |

SAMPLE

Note: Milwaukee County will award the Contract on the basis of the Base Bid alone or a combination of the Base Bid and any combination of the alternative bid item(s), whichever would be most advantageous to Milwaukee County.

# ATTACHMENT B

**PROJECT NO. V025-13807**
**SCHEDULE OF PRICES**
**FOR: Rawson Avenue Lift Station**
**AT: 700 West Rawson Avenue**
**Milwaukee, Wisconsin**

**Note: Bidder must state prices in words and figures and sign proposal.**

| Item No. | Quantity | Items Bid Price Written in Words | Total Amount of Bid |
|---|---|---|---|
| **BASE BID** | | | |
| 1 | 1 Lump Sum | Storm Water Lift Station Project as Defined in Project Documents<br>Per Lump Sum | |
| 2 | 1 Lump Sum | Allowance as Defined in Project Documents<br>Fifty Thousand Dollars and No/100<br>Per Lump Sum | $50,000.00 |

**BASE BID**
Total amount for items one (1) through two (2) inclusive.

Dollars

Alternative Bids: All bidders shall fill in all the Alternative Bids as listed. Failure of a bidder to fill in an alternative bid will be cause for the owner to disqualify bid. Where no change in price occurs or the Alternative Bid does not affect the particular Bid, mark "No Change". If any Alternative Bid is left blank, it shall mean the Contractor has no addition or deduction in the contract.

**ALTERNATIVE BID ITEMS**

| | | | |
|---|---|---|---|
| 1 | 1 Lump Sum | Add Temporary Storm Water Pumping, Lump Sum<br>Per Lump Sum | Add<br>$ |
| 2 | 1 Lump Sum | Deduct Replacement Storm Sewer in Railroad Right-of-Way, Lump Sum<br>Per Lump Sum | (Deduct)<br>$ |
| 3 | 1 Lump Sum | Deduct Ditch (Swale) Improvements in Railroad Right-of-Way, Lump Sum<br>Per Lump Sum | (Deduct)<br>$ |
| 4 | 1 Lump Sum | Deduct Existing Lift Station Demolition, Lump Sum<br>Per Lump Sum | (Deduct)<br>$ |
| 5 | 1 Lump Sum | Deduct High Water Warning Signs, Lump Sum<br>Per Lump Sum | (Deduct)<br>$ |
| 6 | 1 Lump Sum | Deduct for Substantial Completion Extended to April 30, 2014, Lump Sum<br>Per Lump Sum | (Deduct)<br>$ |

Note: Milwaukee County will award the Contract on the basis of the Base Bid alone or a combination of the Base Bid and any combination of the alternative bid item(s), whichever would be most advantageous to Milwaukee County.

# ATTACHMENT C

ATTACHMENT C

EXCAVATION LIMITS

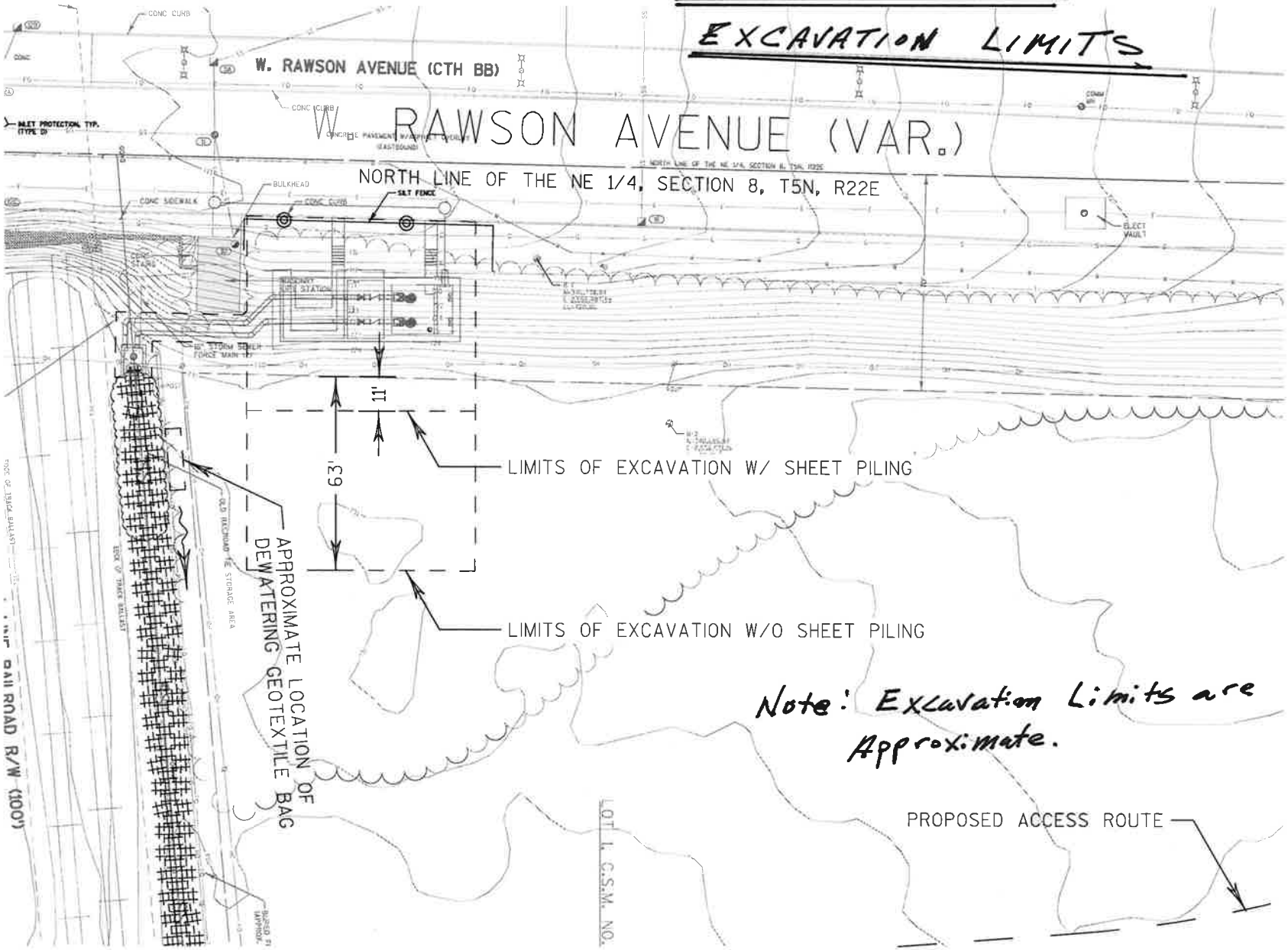


Note: Excavation Limits are Approximate.

# ATTACHMENT D

SECTION 01340
SUBMITTALS

PROJECT: Rawson Ave. Lift Station PROJECT NO: V025-13807

CONTRACTOR: _____ CONSTRUCTION COORDINATOR: _____

| SECTION | DESCRIPTION OF SUBMITTAL | O & M INCL. | DATE SCHEDULED | DATE RECEIVED | DATE TO DESIGNER | DATE RETURNED | COMMENTS |
|---|---|---|---|---|---|---|---|
| 01295 | Schedule of Values | | | | | | |
| 01321 | CD of digital images | | | | | | |
| 01325 | Progress schedule | | | | | | |
| 01457 | Test report for each piping system tested | | | | | | |
| 01458 | 7 copies of complete testing report | | | | | | |
| 01505 | Construction Plan | | | | | | |
| 01505 | Application for payments | | | | | | |
| 01505 | Documentation on construction waste management plan | | | | | | |
| 01505 | Closeout submittals | | | | | | |
| 01732 | Notice of structural cut not shown on drawings, and request for consent to proceed | | | | | | |
| 01732 | Recommendation of change of materials or methods | | | | | | |
| 01732 | Notice designating time work will be uncovered for observation | | | | | | |
| 01788 | Marked up set of record documents and transmittal letter | | | | | | |
| 01814 | Operations & Maintenance data | ✓ | | | | | |
| 01814 | Testing and system operation demonstration reports | | | | | | |
| 01816 | Electrical system demonstration log | | | | | | |
| 02082 | RCP test results included in shipment | | | | | | |
| 02082 | Compressive strength tests of drilled cores (if required) | | | | | | |
| 02315 | Shoring, bracing, and sheeting layout and details | | | | | | |

| SECTION | DESCRIPTION OF SUBMITTAL | O & M INCL. | DATE SCHEDULED | DATE RECEIVED | DATE TO DESIGNER | DATE RETURNED | COMMENTS |
|---|---|---|---|---|---|---|---|
| 02315 | Filter fabric sample and manufacturer's literature | | | | | | |
| 02315 | Compaction and soil test results | | | | | | |
| 02315 | Fill material test results | | | | | | |
| 02316 | Test results | | | | | | |
| 02316 | Shoring, bracing, and sheet piling construction procedures and details | | | | | | |
| 02504 | Manufacturer's specs, data sheets, and installation instructions and other data | ✓ | | | | | |
| 02535 | Compressive strength tests of drilled cores (if required) | | | | | | |
| 03200 | Reinforcing | | | | | | |
| 03300 | Data on construction joints not shown on drawings | | | | | | |
| 03300 | Verification of concrete mix design | | | | | | |
| 03300 | Waterstop, admixture, and water reducer product data | | | | | | |
| 03300 | Concrete test results and concrete delivery tickets | | | | | | |
| 03300 | Miscellaneous data (NRMCA certification, fly ash specifications, etc.) | | | | | | |
| 05500 | Shop drawings of metal fabrications | | | | | | |
| 05500 | Manufacturer's catalog sheets on premanufactured items | | | | | | |
| 05500 | Floor access hatch warranty | | | | | | |
| 09961 | Manufacturer's literature for each coating | | | | | | |
| 09961 | Factory coating data | | | | | | |
| 09961 | Schedule of proposed coating systems | | | | | | |
| 10436 | Product data for each type of product | | | | | | |
| 10436 | Shop drawings for post and panels signs | | | | | | |
| 11285 | Product data and shop drawings of cast iron sluice gates | ✓ | | | | | |
| 11285 | Operation & Maintenance data | ✓ | | | | | |

| SECTION | DESCRIPTION OF SUBMITTAL | O & M INCL. | DATE SCHEDULED | DATE RECEIVED | DATE TO DESIGNER | DATE RETURNED | COMMENTS |
|---|---|---|---|---|---|---|---|
| 11312 | Product data and shop drawings of submersible nonclog pumps | ✓ | | | | | |
| 11312 | Operations & Maintenance data | ✓ | | | | | |
| 11313 | Product data and shop drawings of portable submersible nonclog pumps | ✓ | | | | | |
| 11313 | Operations & Maintenance data | ✓ | | | | | |
| 13121 | Manufacturer's data | ✓ | | | | | |
| 13121 | Shop drawings | ✓ | | | | | |
| 13400 | Submit each panel with other submittals | ✓ | | | | | |
| 13440 | Book of product data, drawings, and other information for each piece of equipment/system | ✓ | | | | | |
| 13442 | Shop drawings of wiring and wiring identification and terminal identification | ✓ | | | | | |
| 13476 | Product data including literature installation details, etc. | ✓ | | | | | |
| 15012 | Product data and coatings system data | ✓ | | | | | |
| 15012 | Shop drawings | ✓ | | | | | |
| 15030 | Product data including manufacturer's data and dimensional drawings and miscellaneous information | ✓ | | | | | |
| 15030 | Operation & Maintenance data | ✓ | | | | | |
| 15060 | Shop drawings of pipe supporting system, data, and installation instructions | ✓ | | | | | |
| 15123 | Product data for substitutions or "Or Equal" items | ✓ | | | | | |
| 15200 | Shop drawings | ✓ | | | | | |
| 16030 | Study report, including summary of results of power system study | | | | | | |
| 16050 | Product data including installation instructions | ✓ | | | | | |
| 16050 | Operations & Maintenance data | ✓ | | | | | |
| 16220 | Product data and equipment identification; submit with equipment specified in other sections | ✓ | | | | | |
| 16220 | Operations & Maintenance data | ✓ | | | | | |

| SECTION | DESCRIPTION OF SUBMITTAL | O & M INCL. | DATE SCHEDULED | DATE RECEIVED | DATE TO DESIGNER | DATE RETURNED | COMMENTS |
|---|---|---|---|---|---|---|---|
| 16443 | Product data | ✓ | | | | | |
| 16443 | Shop drawings | ✓ | | | | | |
| 16443 | Certified reports of field tests and observations | | | | | | |
| 16443 | Maintenance data for motor-control centers | ✓ | | | | | |
| 16443 | Load-current and overload-relay heater list | ✓ | | | | | |

* * * END OF SECTION * * *

Dw! ² ⌊bD{

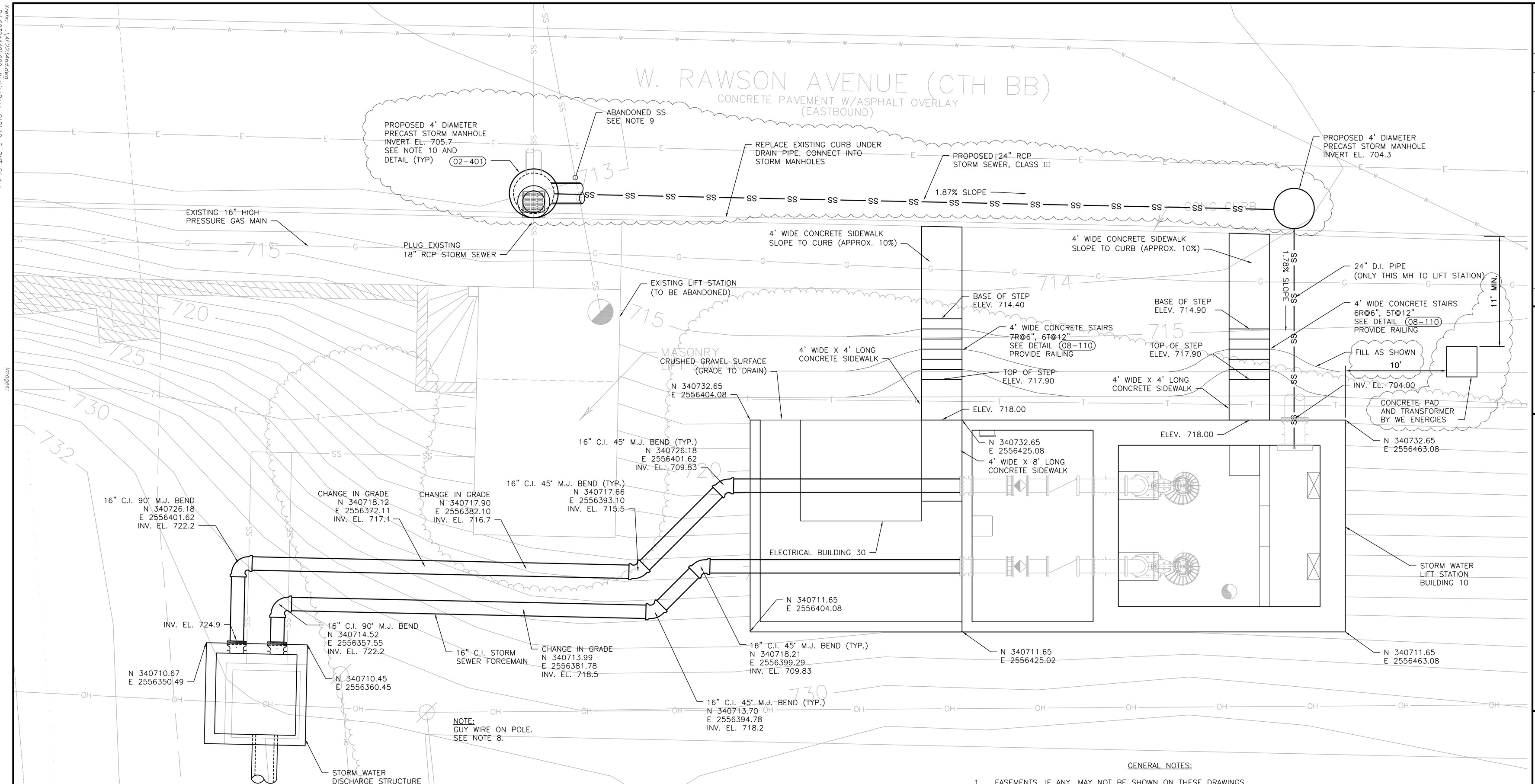


## SYMBOLS

- IRON PIPE/IRON PIN
- SECTION CORNER MONUMENT
- BENCHMARK
- SURVEY CONTROL POINT
- FIBER OPTIC MANHOLE
- STORM SEWER MANHOLE
- SANITARY SEWER MANHOLE
- ELECTRIC MANHOLE
- TELEPHONE MANHOLE
- WATER MANHOLE/VAULT/WELL
- STORM INLET (ROUND)
- STORM INLET (SQUARE)/CURB INLET
- VALVE/CLEANOUT
- UTILITY PEDESTAL
- OVERHEAD UTILITY POLE
- POLE
- LIGHT POLE
- MARSH
- FIRE HYDRANT
- TRAFFIC SIGNAL
- SIGN
- EVERGREEN TREE
- SHRUB
- DECIDUOUS TREE
- BUSH

## LINETYPES

- BEAM GUARD
- CABLE GUARD
- RIP RAP
- CHAIN LINK FENCE
- FENCE (GENERIC)
- WOOD FENCE
- VEGETATION LINE
- RAILROAD TRACKS
- CORPORATE LIMITS
- SS — STORM SEWER LINE
- C — COMMUNICATIONS UNDERGROUND
- E — ELECTRIC UNDERGROUND
- FO — FIBER OPTIC UNDERGROUND
- G — GAS UNDERGROUND
- PIPL — PIPELINE UNDERGROUND
- OH — OVERHEAD UTILITY
- SAN — SANITARY SEWER LINE
- SSS — COMBINED SEWER LINE
- T — TELEPHONE UNDERGROUND
- TV — TELEVISION UNDERGROUND
- W — WATER LINE
- CHANNEL/WATER'S EDGE

## GENERAL NOTES:

1. EASEMENTS, IF ANY, MAY NOT BE SHOWN ON THESE DRAWINGS.
2. ELEVATIONS ARE REFERENCED TO THE NATIONAL GEODETIC VERTICAL DATUM OF 1929. SUBTRACT 580.60 TO PLACE ELEVATIONS ON THE CITY OF MILWAUKEE DATUM.
3. HORIZONTAL DATUM IS BASED ON THE WISCONSIN STATE PLANE COORDINATE SYSTEM GRID, SOUTH ZONE (NAD-27) AND ALL BEARINGS ARE REFERENCED TO GRID NORTH.
4. CONTOUR LINES SHOWN ON THE PLANS ARE BASED ON MILWAUKEE COUNTY LIDAR 2010 DATA.
5. FIELD LOCATION OF EXISTING SITE FEATURES WAS PERFORMED BY MILWAUKEE COUNTY.
6. LOCATION OF UNDERGROUND UTILITIES WHERE NOT SUBSTANTIATED BY PHYSICAL EVIDENCE ARE TAKEN FROM RECORDS AND/OR FIELD MARKINGS NORMALLY CONSIDERED RELIABLE. NO RESPONSIBILITY FOR THEIR ACCURACY IS ASSUMED BY THE ENGINEER.
7. FINAL GRADES OUTSIDE OF BUILDINGS 10, 20, AND 30 TO MATCH EXISTING GRADES AT SAME LOCATIONS. FILL AS SHOWN AT CONCRETE STAIRS.
8. CONTRACTOR IS TO COORDINATE WITH UTILITIES. CONTRACTOR TO WORK AROUND OR RELOCATE GUY WIRE AT UTILITY POLE.
9. REMOVE ABANDONED STORM SEWER AS NECESSARY FOR NEW CONSTRUCTION. GROUT OPENINGS IN ABANDONED STORM SEWER.
10. INSTALL 2 – NEW 4' DIA. STORM MANHOLES WITH ECCENTRIC CONE TOPS AT EDGE OF ROAD. MANHOLE COVER TO BE NEW COMBINATION CURB INLET WITH CURBBOX. NEENAH FOUNDRY #R-3229-A TYPE C GRATE. NEW CURB UNDERDRAIN PIPES TO BE GROUTED INTO HOLES DRILLED INTO MANHOLES. SEE DETAIL 02-401.

N

0' 5' 10'
SCALE

| NO | REVISIONS | DRN | CHK | DATE |
|---|---|---|---|---|
| A | ISSUED FOR BID | BEH | DEP | 09-13-13 |
| B | ADDENDUM NO. 3 | DRB | DFP | 10/01/13 |

| | | |
|---|---|---|
| DRN | DRB | SEPT 2013 |
| DES | NKW | SEPT 2013 |
| CHK | DFP | SEPT 2013 |
| APP | DEP | SEPT 2013 |

Sheboygan, Wisconsin

Prepared for: Milwaukee County Dept. of Administrative Services
FACILITIES MANAGEMENT DIVISION
Architectural, Engineering & Environmental Services
CITY CAMPUS 2711 W. WELLS ST. 2ND FLOOR MILWAUKEE, WI 53208

Prepared by: AECOM

RAWSON AVENUE
**STORM WATER LIFT STATION**
MILWAUKEE COUNTY, WISCONSIN

**STORM WATER LIFT STATION CIVIL SITE PLAN**

| | |
|---|---|
| DATE | SEPTEMBER 2013 |
| PROJECT NO | 60304448 |
| FILENAME | 02-C-05.dwg |
| SHEET NO | 12 |
| DRAWING NO | 02-C-05 |

Plotted By: brandtd1
Plot File Date Created: Oct/02/2013 11:55 AM
Layout-Sheet Name: PLAN
Filename: P:\60304448\900-WORKINGDOCS-CAD\02-C-05.DWG

Xrefs: \AE2234bd.dwg
P:\60304448\900-WorkingDocs-CAD\10-S-BMT-01.dwg
P:\60304448\900-WorkingDocs-CAD\20-S-BMT-01.dwg
P:\60304448\900-WorkingDocs-CAD\20-M-BMT-01.dwg
P:\60304448\900-WorkingDocs-CAD\10-M-BMT-01.dwg
P:\60304448\900-WorkingDocs-CAD\Ex-Topo-Survey-V025-1380?.dwg
\V025-1380?_utl.dwg
\V025-1380?_cm.dwg

Images:

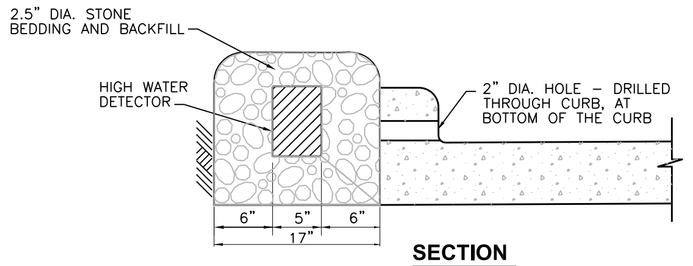


**SECTION**

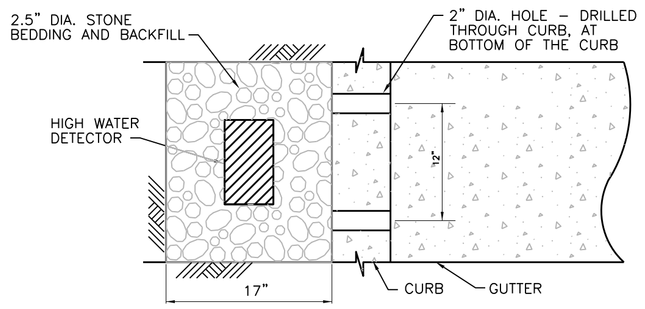


**PLAN**

NOTE:
LOCATION TO BE DETERMINED BY ENGINEER.

**HIGH WATER DETECTOR INSTALLATION DETAIL** (02-000)
NTS

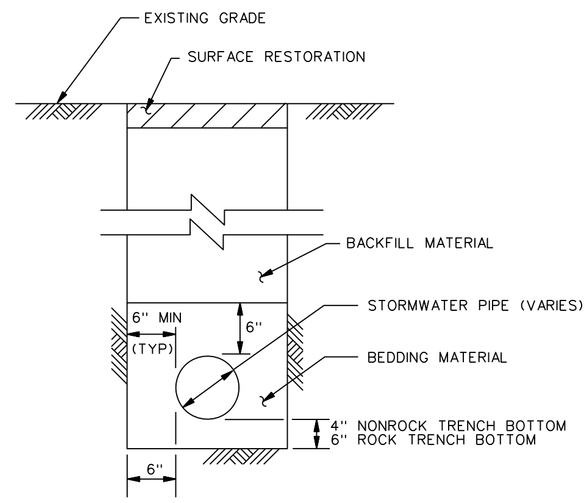


**TYPICAL TRENCH DETAIL** (02-003)
NTS

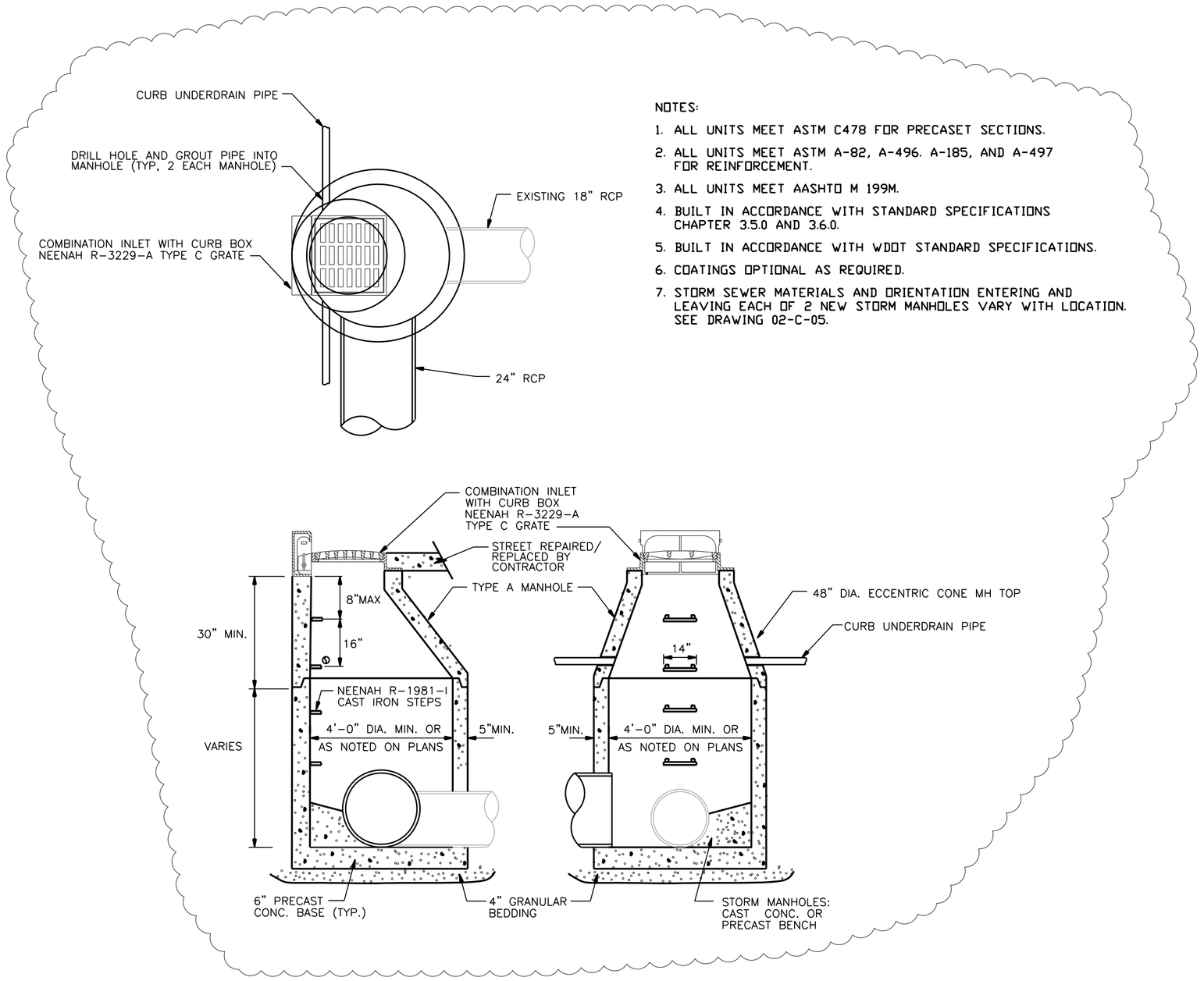


NOTES:

1. ALL UNITS MEET ASTM C478 FOR PRECASET SECTIONS.
2. ALL UNITS MEET ASTM A-82, A-496. A-185, AND A-497 FOR REINFORCEMENT.
3. ALL UNITS MEET AASHTO M 199M.
4. BUILT IN ACCORDANCE WITH STANDARD SPECIFICATIONS CHAPTER 3.5.0 AND 3.6.0.
5. BUILT IN ACCORDANCE WITH WDOT STANDARD SPECIFICATIONS.
6. COATINGS OPTIONAL AS REQUIRED.
7. STORM SEWER MATERIALS AND ORIENTATION ENTERING AND LEAVING EACH OF 2 NEW STORM MANHOLES VARY WITH LOCATION. SEE DRAWING 02-C-05.

**MANHOLE TYPE A** (02-401)
NTS

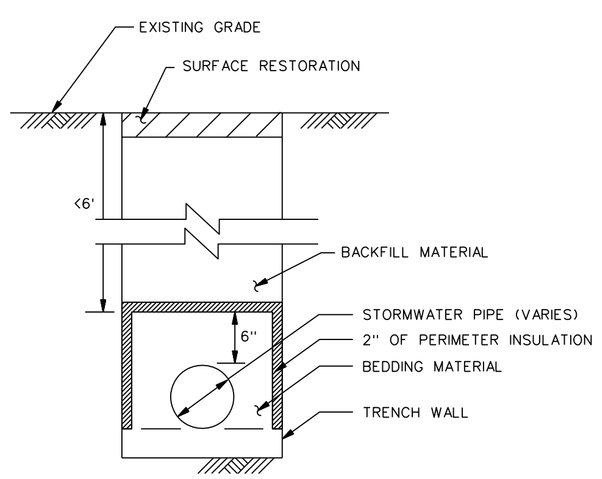


NOTE:
INSTALL INSULATION AROUND PIPE IN TRENCH IF COVER OVER TOP OF PIPE IS LESS THAN 6 FEET.

**BURIED PIPING INSULATION** (02-004)
NTS

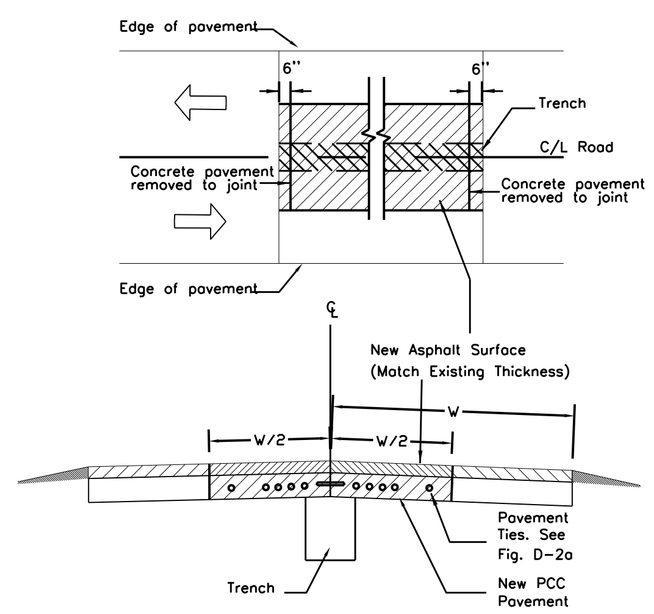


**PAVEMENT REPLACEMENT** (02-005)
NTS

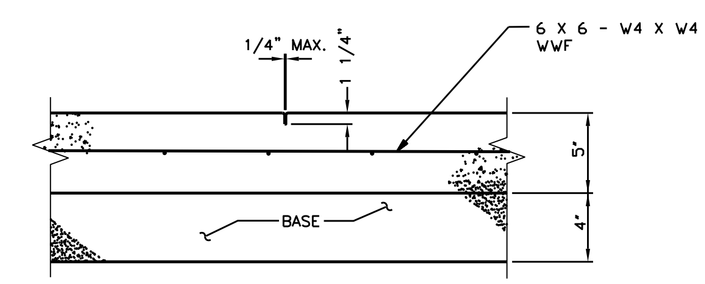


NOTE:

THIS JOINT TO BE SPACED AT 5'-0" O.C. MAXIMUM EACH DIRECTION.

**CONCRETE SIDEWALK DETAIL** (02-006)
NTS

| NO | REVISIONS | DRN | CHK | DATE |
|---|---|---|---|---|
| A | ISSUED FOR BID | BEH | DEP | 09-13-13 |
| B | ADDENDUM NO. 3 | DRB | DFP | 10/01/13 |

Sheboygan, Wisconsin

| | | |
|---|---|---|
| DRN | | SEPT 2013 |
| DES | | SEPT 2013 |
| CHK | | SEPT 2013 |
| APP | DEP | SEPT 2013 |

Prepared for: Milwaukee County Dept. of Administrative Services
FACILITIES MANAGEMENT DIVISION
Architectural, Engineering & Environmental Services
CITY CAMPUS 2711 W. WELLS ST. 2ND FLOOR MILWAUKEE, WI 53208

Prepared by: AECOM

RAWSON AVENUE
**STORM WATER LIFT STATION**
MILWAUKEE COUNTY, WISCONSIN

**STORM WATER LIFT STATION CIVIL STANDARD DETAILS**

DATE SEPTEMBER 2013
PROJECT NO 60304448
FILENAME 99-C-01.dwg
SHEET NO 30
DRAWING NO **99-C-01**

Xrefs: \\AE2234sd.dwg
Images: screen_hunter115.jpg
Plotted By: brandtd1
Plot File Date Created: Oct/02/2013 11:59 AM
Layout-Sheet Name: LAYOUT
Filename: P:\60304448\900-WORKINGDOCS-CAD\99-C-01.DWG

RELATIVE LOCATION ONLY NTS
SEE 99-E-02 FOR LOCATION

RELATIVE LOCATION ONLY NTS
SEE 99-E-02 FOR LOCATION

RELATIVE LOCATION ONLY NTS
SEE 99-E-02 FOR LOCATION

RELATIVE LOCATION ONLY NTS
SEE 99-E-02 FOR LOCATION

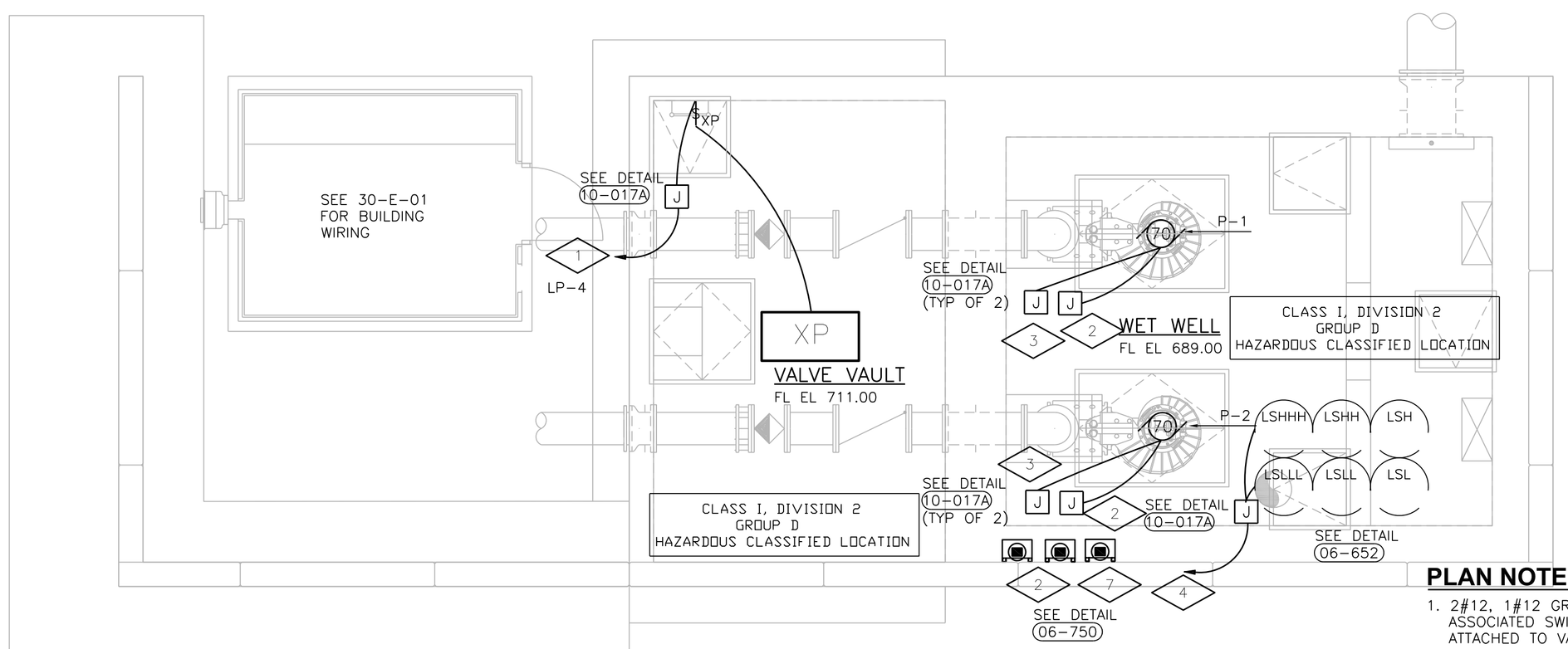


APPROXIMATE LOCATION OF UTILITY SUPPLIED TRANSFORMER AND PAD. ROUTE 4" PVC COATED CONDUIT PER DETAIL (10-262) TO 400A CONTRACTOR SUPPLIED UTILITY APPROVED TRANS SOCKET LOCATED ON NORTH SIDE OF ELECTRIC BUILDING. REFER TO 02-C-05 FOR LOCATION.

N

## GENERAL NOTES:

1. CONDUITS FROM WET WELL OR VALVE VAULT TO JUNCTION BOX SHALL BE PVC COATED GRS. SEAL OFFS ARE REQUIRED IN RIGID CONDUIT WITHIN 10' OF WET WELL/VALVE VAULT EXTERIOR WALL TO MEET CLASS I DIV 2 NEC REQUIREMENTS FOR CONDUITS EXITING JUNCTION BOX TO DISCONNECT OR ELECTRIC BUILDING.
2. REFER TO 99-E-01 FOR CONDUIT/CABLE SIZES NOT SHOWN ON THIS DRAWING.
3. CONDUITS SHALL EXIT ELECTRIC BUILDING AT CEILING LEVEL AND CONTINUE AT THAT LEVEL TO RETAINING WALL. FASTEN TO WALL USING UNISTRUT/CLAMPS AND CONTINUE AT THAT LEVEL TO JUNCTION BOX OR DISCONNECT POSITION AND THEN DROP DOWN TO DEVICE OR ROUTE ALONG WET WELL/VALVE VAULT SURFACE TO ENDPOINT. CONTRACTOR SUGGESTED STAINLESS STEEL ALTERNATE CONDUIT ROUTING WILL BE CONSIDERED.
4. JUNCTION BOXES SHALL BE NEMA 4X CONTAINING TERMINALS FOR ALL WIRES ENTERING FROM THE WET WELL OR VALVE VAULT.

## LOWER PLAN

0' 2' 4' 8'
SCALE

## PLAN NOTES:

1. 2#12, 1#12 GRD ¾"C TO LP LOCATED IN MCC IN ELECTRIC BUILDING . LOCATE ASSOCIATED SWITCH NEAR TOP OF LADDER BELOW VAULT CEILING. LIGHT TO BE ATTACHED TO VAULT CEILING.
2. TO RELATED DISCONNECT ON WALL AND THEN CONTINUING TO SOFT START IN MCC LOCATED IN ELECTRIC BUILDING.
3. VENDOR SUPPLIED CABLE IN 1-1/2"C TO PUMP PROTECTION MODULE LOCATED IN CONTROL PANEL IN ELECTRIC BUILDING. JUNCTION BOX SHALL CONTAIN TERMINALS FOR MOTOR CONTROLS WIRING.
4. 12 #12, #12 GRD IN 1-1/2"C TO CONTROL PANEL IN ELECTRIC BUILDING.
5. SECTION 10436 WATER LEVEL SENSOR AND CONTROLS INSTALLED PER DETAIL (02-001) ON 99-C-01 AND TO BE LOCATED AT LOW SPOT SHOWN ON 99-E-02. COORDINATE EXACT SENSOR LOCATION WITH OWNER. PROVIDE ¾" CONDUIT FOR VENDOR SUPPLIED CABLE FROM SENSOR TO NEAREST LIGHT POLE AND THEN TO VENDOR SUPPLIED CONTROL BOX, RADIO, AND SOLAR PANEL. MOUNT PER MANUFACTURER RECOMMENDATIONS.
6. SECTION 10436 SIGN WITH RECEIVER, BEACON, AND SOLAR CELL MOUNTED AT SECOND LIGHT POLE ON MEDIAN FROM RAILROAD BRIDGE ON BOTH SIDES. INSTALL PER MANUFACTURER RECOMMENDATIONS WITH FACE OF SIGN AWAY FROM BRIDGE.
7. TO RELATED PORTABLE PUMP DISCONNECT IN ELECTRIC BUILDING MCC. LOCATE MINIMUM OF 10 FEET AWAY FROM WET WELL VENT.

| NO | REVISIONS | DRN | CHK | DATE |
|---|---|---|---|---|
| A | ISSUED FOR BID | BEH | DEP | 09-13-13 |
| B | ADDENDUM NO. 3 | DRB | DFP | 10/01/13 |

Sheboygan, Wisconsin

| | | |
|---|---|---|
| DRN | WLP | SEPT 2013 |
| DES | WLP | SEPT 2013 |
| CHK | DMK | SEPT 2013 |
| APP | DEP | SEPT 2013 |

Prepared for: Milwaukee County Dept. of Administrative Services
FACILITIES MANAGEMENT DIVISION
Architectural, Engineering & Environmental Services
CITY CAMPUS 2711 W. WELLS ST. 2ND FLOOR MILWAUKEE, WI 53208

Prepared by: AECOM

RAWSON AVENUE
**STORM WATER LIFT STATION**
MILWAUKEE COUNTY, WISCONSIN

**STORM WATER PUMP STATION LOWER PLAN**

DATE SEPTEMBER 2013
PROJECT NO 60304448
FILENAME 10-E-01.dwg
SHEET NO 25
DRAWING NO **10-E-01**

Xrefs: \AE2234sd.dwg \10-S-BMT-01.dwg \10-S-BMT-01.dwg 30-S-FLR-01.dwg 10-S-FLR-01.dwg
Images:
Plotted By: PodolakW
Plot File Date Created: Oct/01/2013 10:05 AM
Layout-Sheet Name: LAYOUT
Filename: L:\PROJECTS\60304448\900-WORKINGDOCS-CAD\10-E-01.DWG

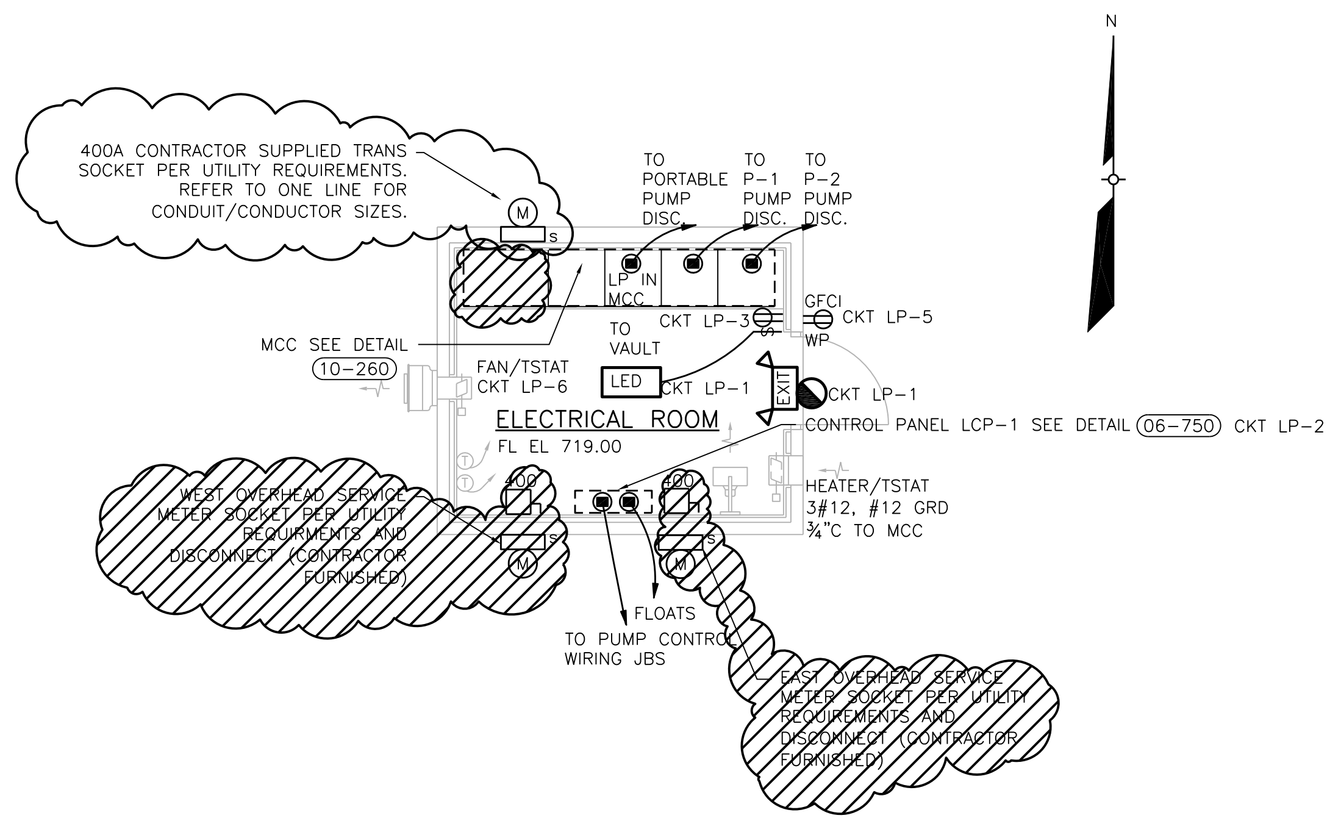


## POWER AND LIGHTING PLAN

0' 2' 4' 8'
SCALE

## GENERAL NOTES:

1. REFER TO 99-E-01 FOR CONDUIT/CABLE SIZES NOT SHOWN ON THIS DRAWING.
2. REFER TO 99-E-02 FOR CIRCUIT IDENTIFICATION.
3. REFER TO DETAIL 10-0170 FOR PUMP PROTECTION MODULE WIRING DETAIL.

| NO | REVISIONS | DRN | CHK | DATE |
|---|---|---|---|---|
| A | ISSUED FOR BID | BEH | DEP | 09-13-13 |
| B | ADDENDUM NO. 3 | DRB | DFP | 10/01/13 |

Sheboygan, Wisconsin

| | | |
|---|---|---|
| DRN | WLP | SEPT 2013 |
| DES | WLP | SEPT 2013 |
| CHK | DMK | SEPT 2013 |
| APP | DEP | SEPT 2013 |

Prepared for: Milwaukee County Dept. of Administrative Services
FACILITIES MANAGEMENT DIVISION
Architectural, Engineering & Environmental Services
CITY CAMPUS 2711 W. WELLS ST. 2ND FLOOR MILWAUKEE, WI 53208

Prepared by: AECOM

RAWSON AVENUE
**STORM WATER LIFT STATION**
MILWAUKEE COUNTY, WISCONSIN

**ELECTRICAL BUILDING POWER AND LIGHTING PLAN**

DATE SEPTEMBER 2013
PROJECT NO 60304448
FILENAME 30-E-01.dwg
SHEET NO 29
DRAWING NO **30-E-01**

Xrefs: \AE2234bd.dwg
P:\60304448\900-WorkingDocs-CAD\30-S-FLR-01.dwg
\30-S-SEC-01.dwg

Images:

Plotted By: PadolakW
Plot File Date Created: Sep/30/2013 2:32 PM
Layout-Sheet Name: LAYOUT
Filename: L:\PROJECTS\60304448\900-WORKINGDOCS-CAD\30-E-01.DWG

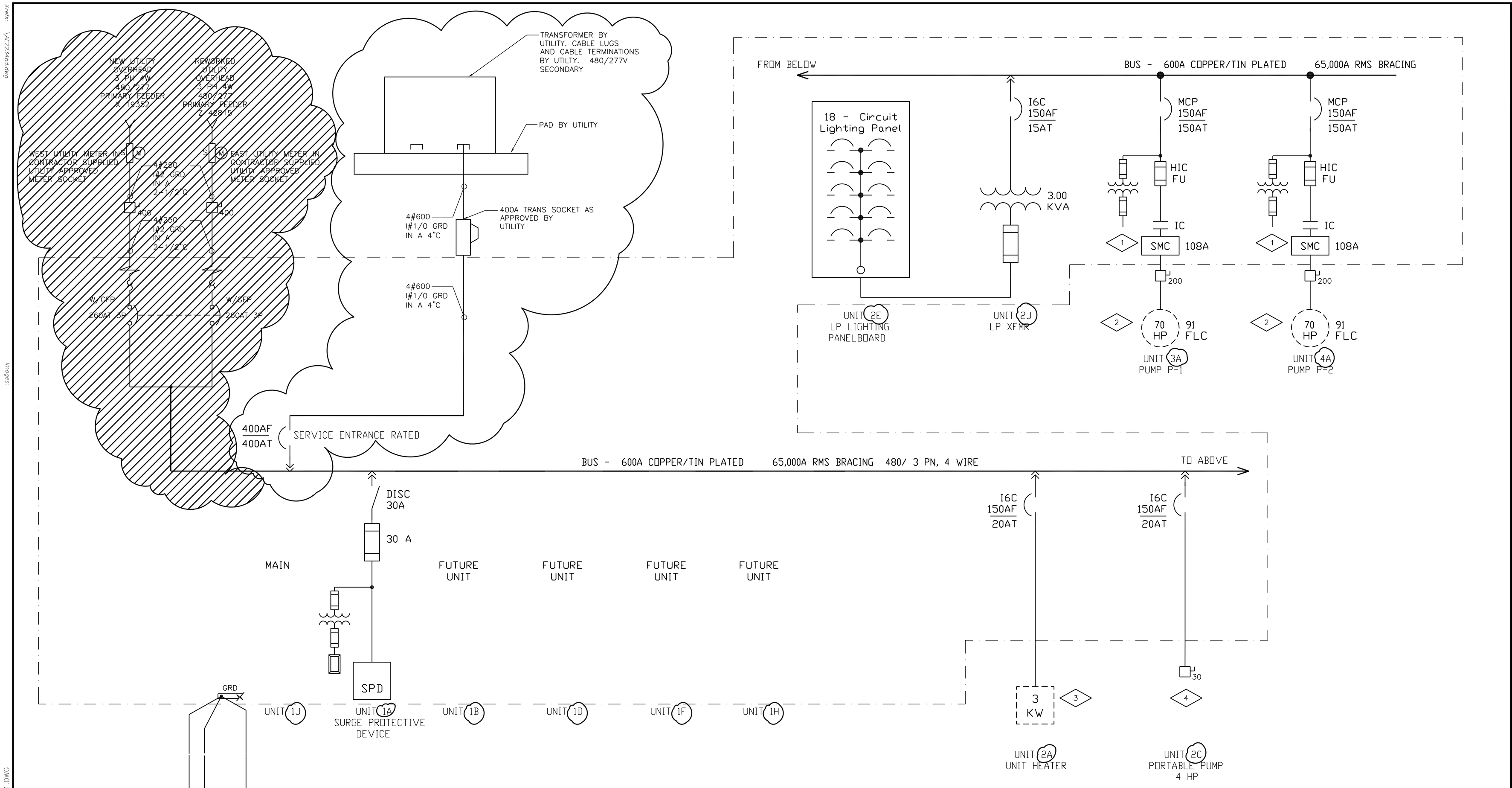


## PLAN NOTES (99-E-01/99-E-02/99-E-03)

1. MCC DOOR MOUNTED HAND–OFF–AUTO AND NORMAL–BYPASS SWITCHES WITH LED RED ON LIGHT.
2. 3#2, #8 GRD IN 1–1/2"C TO 100A CONTRACTOR PROVIDED DISCONNECT AT WELL. REFER TO DETAIL SHEET FOR CONNECTION, ROUTING, AND SEAL OFF REQUIRMENTS AT WELL. SEPARATE 1–1/2"C WILL BE REQUIRED FOR MOTOR PROTECTION CABLES BACK TO CONTROL PANEL.
3. 3#12, #12 GRD IN ¾"C TO HEATER. SELF CONTAINED THERMOSTAT TURNS ON HEATER.
4. 3#12, #12 GRD IN ¾"C TO CONTRACTOR PROVIDED MELTRIC 33–37047–429 30A COMBINATION DISCONNECT/RECEPTACLE. SEAL OFF AT FEED TO DISCONNECT.

# ONE–LINE DIAGRAM

NOTE: ROCKWELL/ALLEN BRADLEY MCC SHOWN – VERIFY SPACE REQUIREMENTS FOR OTHER MFRS.

| NO | REVISIONS | DRN CHK | DATE |
|---|---|---|---|
| A | ISSUED FOR BID | BEH DEP | 09-13-13 |
| B | ADDENDUM NO. 3 | DRB DFP | 10/01/13 |

Sheboygan, Wisconsin

| | | |
|---|---|---|
| DRN | WLP | SEPT 2013 |
| DES | WLP | SEPT 2013 |
| CHK | DMK | SEPT 2013 |
| APP | DEP | SEPT 2013 |

Prepared for: Milwaukee County Dept. of Administrative Services FACILITIES MANAGEMENT DIVISION Architectural, Engineering & Environmental Services CITY CAMPUS 2711 W. WELLS ST. 2ND FLOOR MILWAUKEE, WI 53208

Prepared by: AECOM

RAWSON AVENUE
**STORM WATER LIFT STATION**
MILWAUKEE COUNTY, WISCONSIN

**STORM WATER LIFT STATION MCC ELECTRICAL ONE LINE DIAGRAM**

DATE SEPTEMBER 2013
PROJECT NO 60304448
FILENAME 99–E–01.dwg
SHEET NO 35
DRAWING NO **99-E-01**

Xrefs: \AE2234bd.dwg
Images:

Plotted By: PodolakW
Plot File Date Created: Oct/01/2013 10:09 AM
Layout–Sheet Name: LAYOUT
Filename: L:\PROJECTS\60304448\900–WORKINGDOCS–CAD\99–E–01.DWG

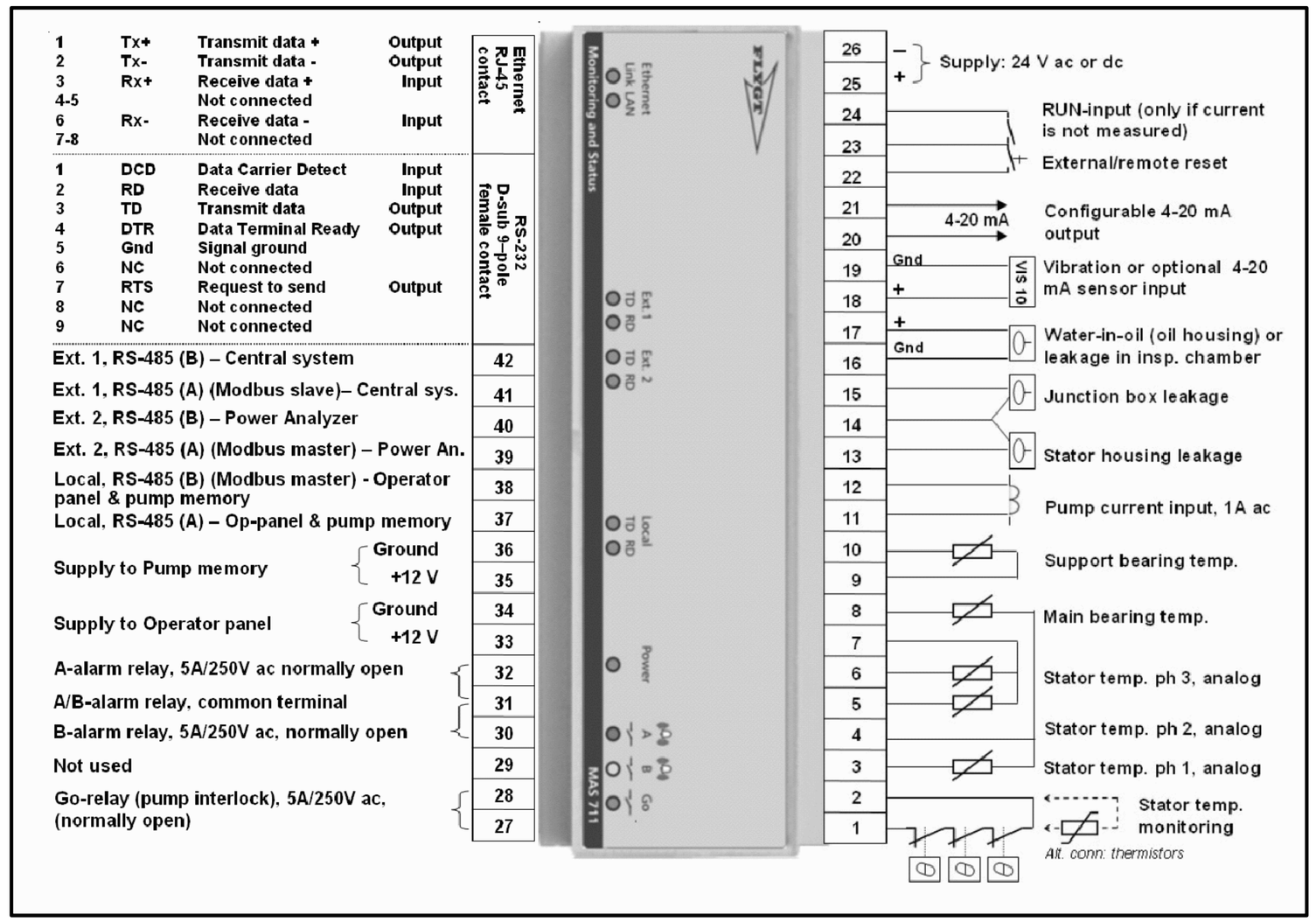


## PUMP SEAL/TEMP DETAIL (10-017D)

NTS

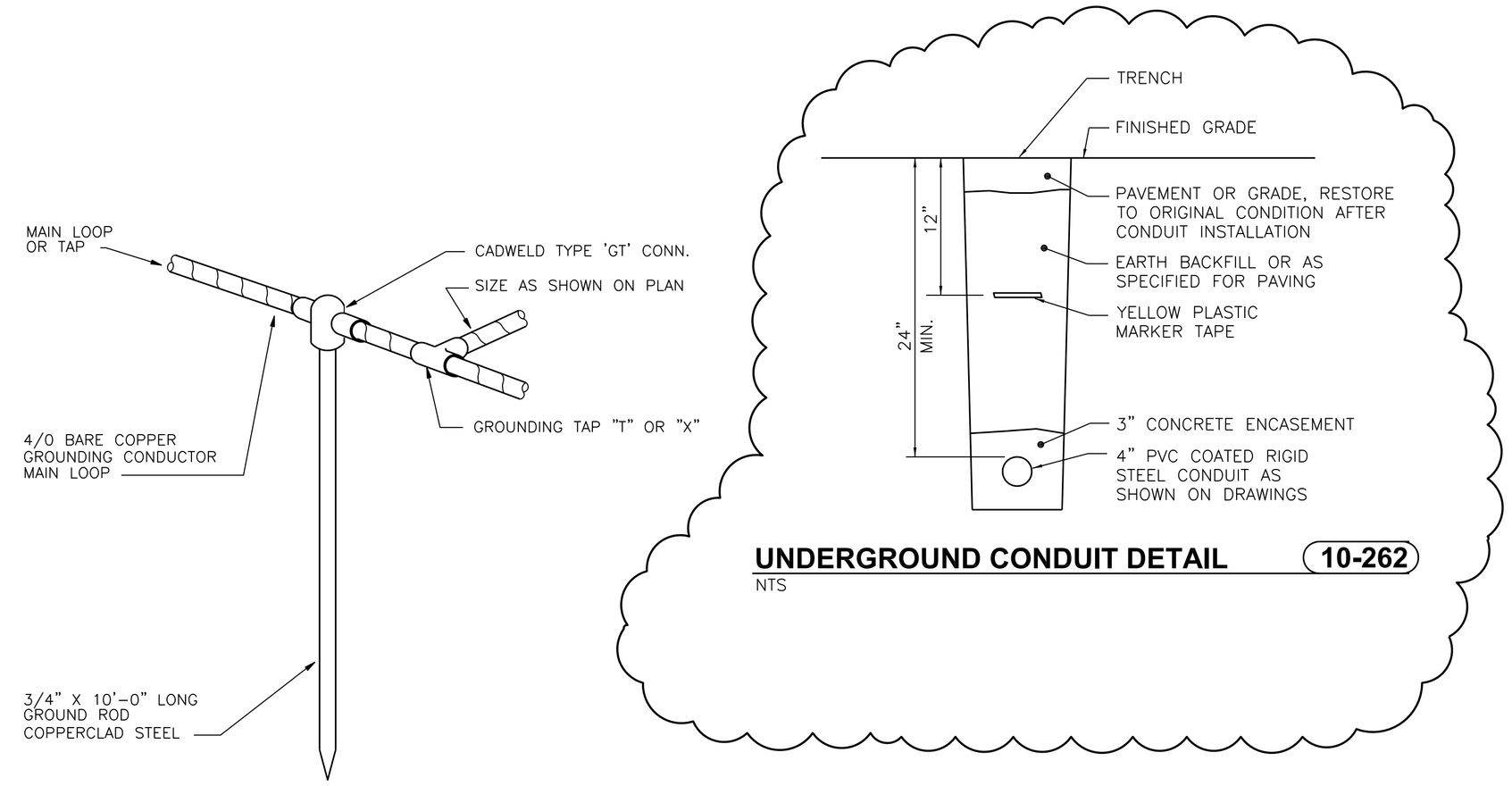


## CONDUCTOR TO GROUND ROD CONNECTION DETAIL (10-451)

NTS

## UNDERGROUND CONDUIT DETAIL (10-262)

NTS

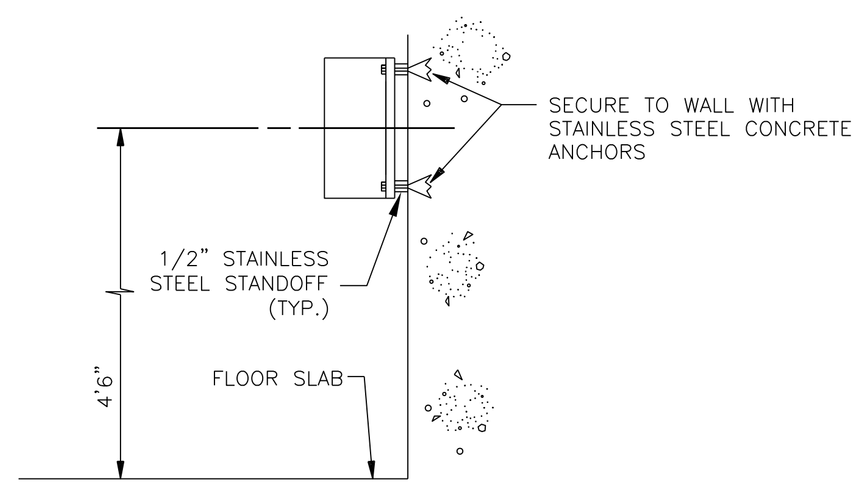


## MOUNTING - INSTRUMENT/DISCONNECT, WALL (06-750)

NTS

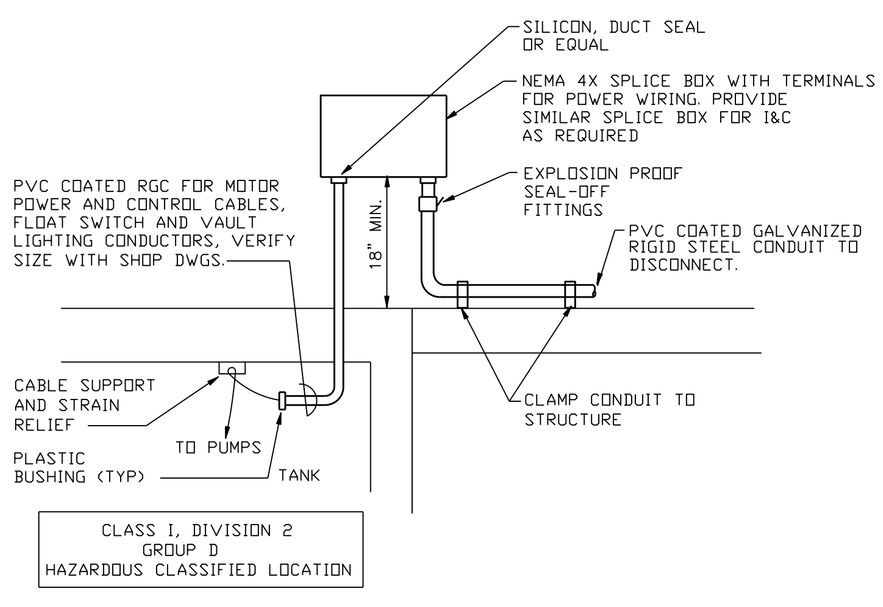


## SPLICE BOX DETAIL (10-017A)

NTS

NOTE: INSTRUMENT WIRING SIMILAR

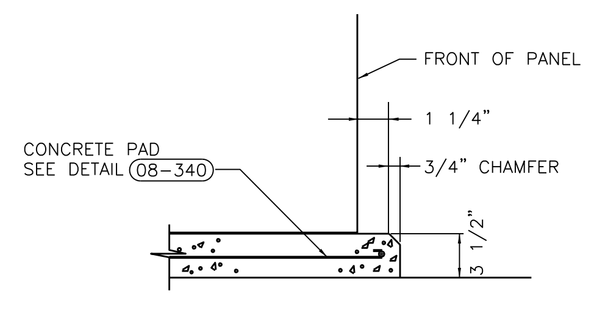


## CONCRETE PAD SECTION (10-260)

NTS

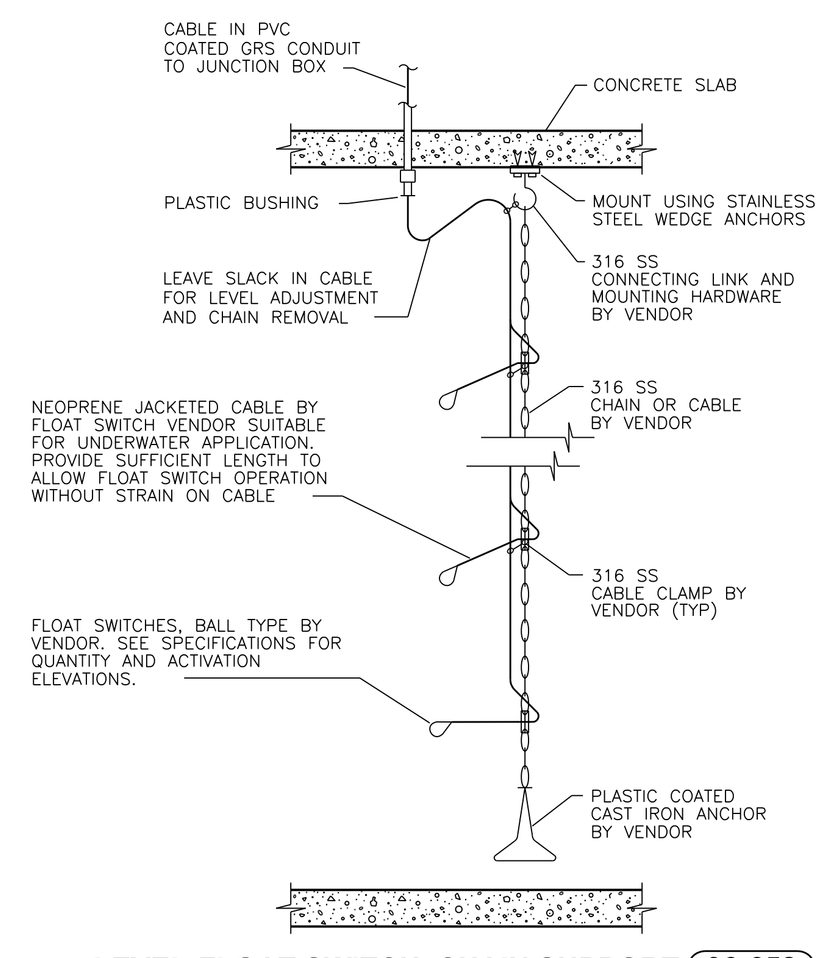


## LEVEL-FLOAT SWITCH, CHAIN SUPPORT (06-652)

NTS

NOTE: MOUNT SO FLOATS DO NOT CONTACT STILLING WELL DURING OPERATION

| NO | REVISIONS | DRN | CHK | DATE |
|---|---|---|---|---|
| A | ISSUED FOR BID | BEH | DEP | 09-13-13 |
| B | ADDENDUM NO. 3 | DRB | DFP | 10/01/13 |

| | | |
|---|---|---|
| DRN | WLP | SEPT 2013 |
| DES | WLP | SEPT 2013 |
| CHK | DMK | SEPT 2013 |
| APP | DEP | SEPT 2013 |

Sheboygan, Wisconsin

Prepared for: Milwaukee County Dept. of Administrative Services FACILITIES MANAGEMENT DIVISION Architectural, Engineering & Environmental Services CITY CAMPUS 2711 W. WELLS ST. 2ND FLOOR MILWAUKEE, WI 53208

Prepared by: AECOM

RAWSON AVENUE
STORM WATER LIFT STATION
MILWAUKEE COUNTY, WISCONSIN

STORM WATER LIFT STATION
ELECTRICAL DETAILS

DATE SEPTEMBER 2013
PROJECT NO 60304448
FILENAME 99-E-03.dwg
SHEET NO 37
DRAWING NO 99-E-03

Xrefs: \AE2234bd.dwg
Images: Flygt MAS711 Cutsheet.tif
Plotted By: PodolakW
Plot File Date Created: Sep/30/2013 2:12 PM
Layout-Sheet Name: LAYOUT
Filename: L:\PROJECTS\60304448\900-WORKINGDOCS-CAD\99-E-03.DWG