MINIMUM REQUIRED SUPPORT SPACING (IN FEET)

NOM. PIPE SIZE (in)	PVC PIPE Schedule 40 Temp °F 60	80	100	120	140	Schedule 80 Temp °F 60	80	100	120	140
1/2	4-1/2	4-1/2	4	2-1/2	2-1/2	5	4-1/2	4-1/2	3	2-1/2
3/4	5	4-1/2	4	2-1/2	2-1/2	5-1/2	5	4-1/2	3	2-1/2
1	5-1/2	5	4-1/2	3	2-1/2	6	5-1/2	5	3-1/2	3
1-1/4	5-1/2	5-1/2	5	3	3	6	6	5-1/2	3-1/2	3
1-1/2	6	5-1/2	5	3-1/2	3	6-1/2	6	5-1/2	3-1/2	3-1/2
2	6	5-1/2	5	3-1/2	7	7	6-1/2	6	4	3-1/2
2-1/2	7	6-1/2	6	4	3-1/2	7-1/2	7-1/2	6-1/2	4-1/2	4
3	7	7	6	4	3-1/2	8	7-1/2	7	4-1/2	4
4	7-1/2	7	6-1/2	4-1/2	4	9	8-1/2	7-1/2	5	4-1/2
6	8-1/2	8	7-1/2	5	4-1/2	10	9-1/2	9	6	5
8	9	8-1/2	8	5	4-1/2	11	10-1/2	9-1/2	6-1/2	5-1/2
10	10	9	8-1/2	5-1/2	5	12	11	10	7	6
12	11-1/2	10-1/2	9-1/2	6-1/2	5-1/2	12	11	10	7	6

POOL PIPE SUPPORT NOTE — PL400-2 — SCALE: NONE

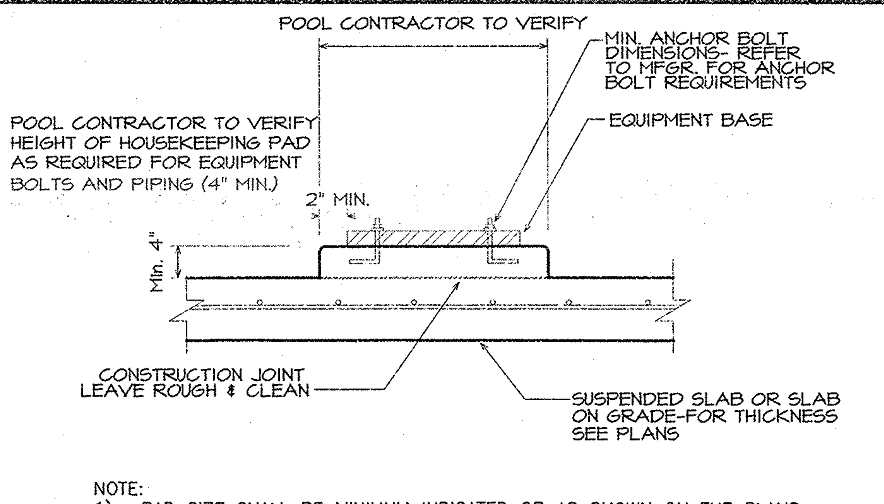

NOTE:
1). PAD SIZE SHALL BE MINIMUM INDICATED OR AS SHOWN ON THE PLANS OR AS INDICATED BY THE MANUFACTURER AND APPROVED BY THE ENGINEER.

2). THE SIZE, NUMBER, TYPE, LOCATION, AND THREAD PROJECTION OF THE ANCHOR BOLTS SHALL BE DETERMINED BY THE EQUIPMENT MANUFACTURER, AND SHALL BE AS APPROVED BY THE ENGINEER. ANCHOR BOLTS SHALL BE HELD IN POSITION WITH A TEMPLATE WHILE PAD IS BEING POURED.

3). EQUIPMENT BASES SHALL BE INSTALLED LEVEL UNLESS SPECIFIED OTHERWISE. EQUIPMENT BASES SHALL BE PROVIDED AND INSTALLED BY SURGE TANK CONTRACTOR. SIZES AND LOCATIONS TO BE VERIFIED BY POOL CONTRACTOR.

EQUIPMENT PAD DETAIL & NOTE — PL400-3 — SCALE: 3/4"=1'-0"

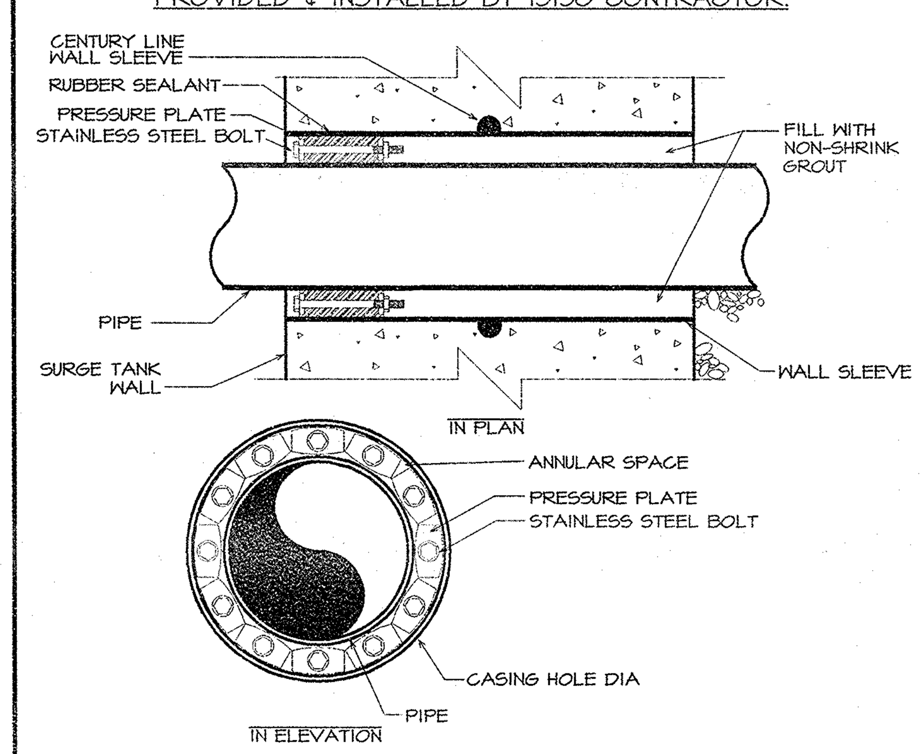

WALL SLEEVE / LINK SEAL DETAIL — PL400-4 — SCALE: NONE

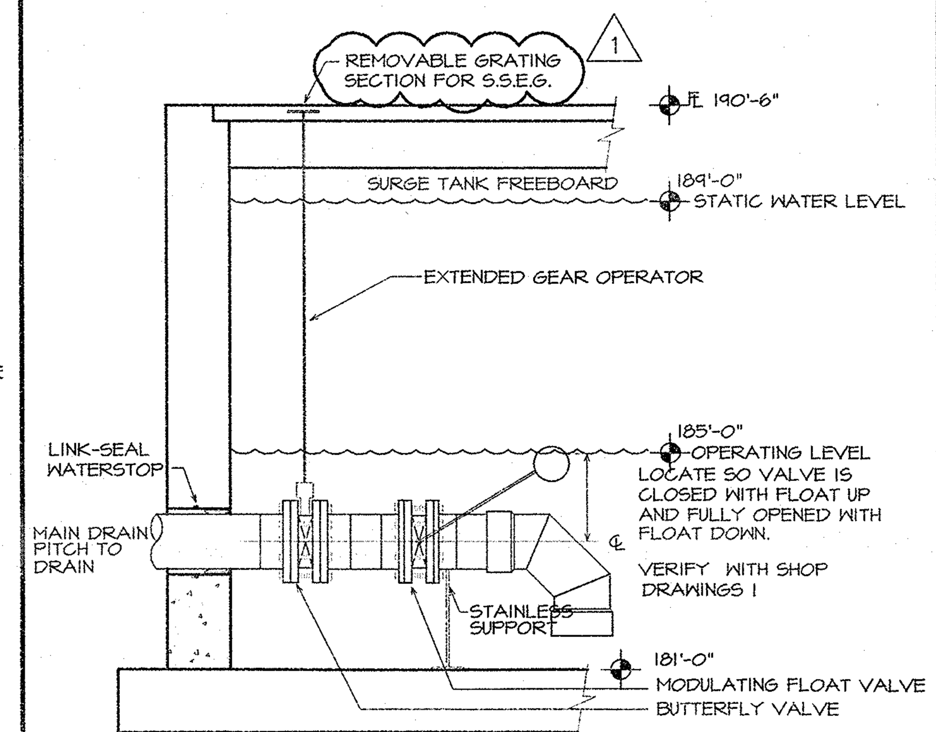

MAIN DRAIN PENETRATION DETAIL — PL400-5 — SCALE: 1/2"=1'-0"

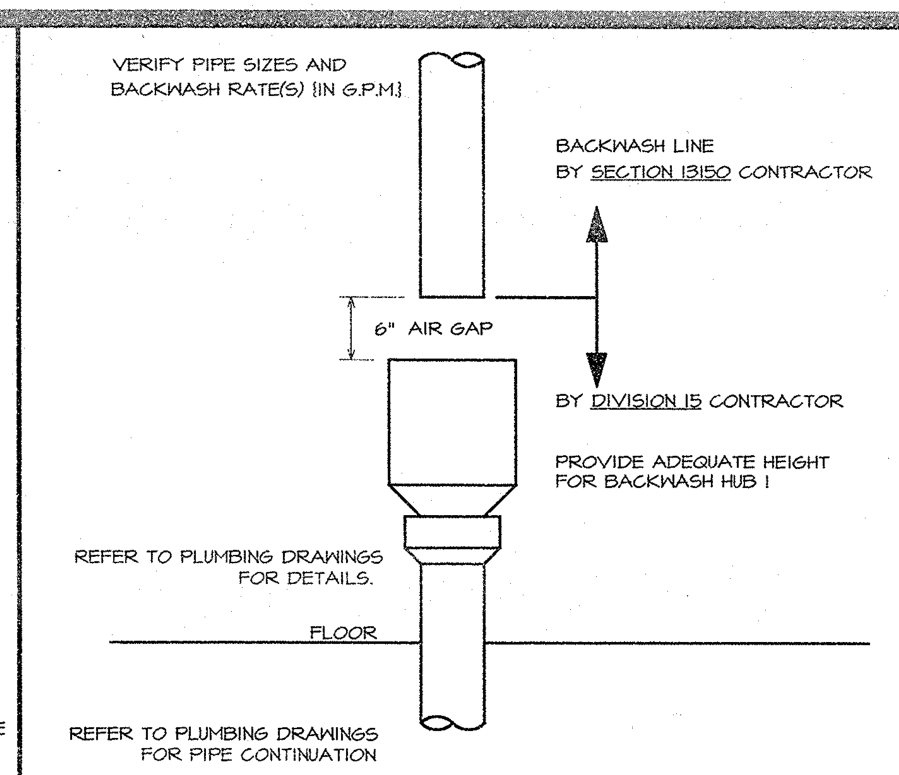

BACKWASH AIR GAP DETAIL — PL400-6 — SCALE: NONE

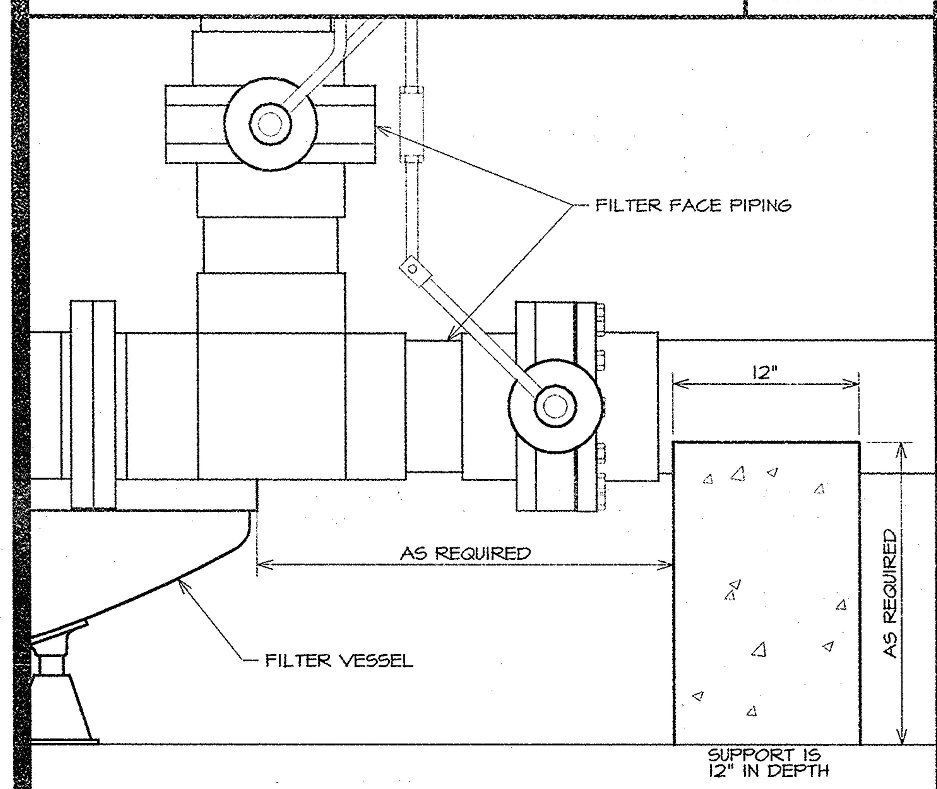

FILTER PIPE SUPPORT DETAIL — PL400-7 — SCALE: NONE

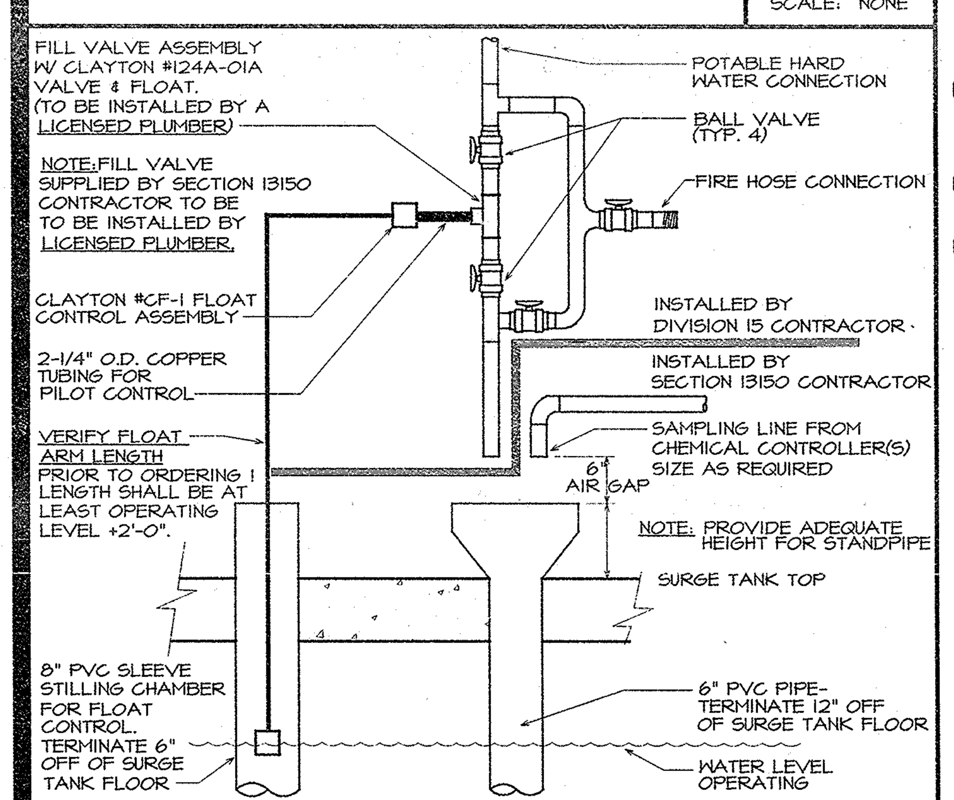

CLA-VALVE AUTO-FILL DETAIL — PL400-8 — SCALE: NONE

KEY NUMBER	EQUIPMENT	QUANTITY	DESCRIPTION
(1/PL410) 1	PUMPS: (FILTRATION):	2	END SUCTION, CLOSE COUPLED, 230/460 V, 3 PHASE, 1750 R.P.M., 2,221 G.P.M., @ 70' T.D.H., EPOXY COATED VOLUTE.
(2/PL410) 2	(TUBE FLUME):	1	END SUCTION, CLOSE COUPLED, 230/460 V, 3 PHASE, 1750 R.P.M., 3,000 G.P.M., @ 25' T.D.H. EPOXY COATED VOLUTE.
(2/PL410) 3	(BODY FLUME):	1	END SUCTION, CLOSE COUPLED, 230/460 V, 3 PHASE, 1750 R.P.M., 1,200 G.P.M., @ 25' T.D.H., EPOXY COATED VOLUTE.
(2/PL410) 4	(KIDDIE RIVER / TWISTER):	1	END SUCTION, CLOSE COUPLED, 230/460 V, 3 PHASE, 1750 R.P.M., 1,400 G.P.M., @ 20' T.D.H., EPOXY COATED VOLUTE.
(2/PL410) 5	(ACTIVITY):	1	END SUCTION, CLOSE COUPLED, 230/460 V, 3 PHASE, 1750 R.P.M., 2,830 G.P.M., @ 20' T.D.H., EPOXY COATED VOLUTE.
6	STRAINERS:	2	MER-MADE FILTER CO., FIBERGLASS BODY, ACRYLIC LID, STAINLESS STEEL BASKET, PROVIDE EACH STRAINER WITH ONE EXTRA STRAINER BASKET.
7	FILTER:	3	NEPTUNE BENSON, # 96-STC-10 THREE 96" TRIPLE CELL FILTER TANKS, 452.4 S.F. OF TOTAL FILTER AREA PROVIDED, 215.5 S.F. OF FILTER AREA REQUIRED BY CODE. 7.13 G.P.M. PER S.F. OF FILTER AREA, SIN[illegible] FIL[illegible]
8	HEATERS:	2	STRIKE Raypak heaters and REPLACE with: Qty.: 2 Teledyne Laars, 40501, 4,050000 BTU 4" water connection, 2" natural gas connection, 30" diameter vent, provide with ASME rating, flow switch, pressure relief valve, and safety controls per State and local boiler codes.
(9/PL410) 9	CHEMICAL CONTROLLER:	1	CHANGE chemical controller from Model 800 to Strantrol. PH Range = 0.0 to 14.0. Chlorine Range = 0.1 to 20.0 ppm. ORP Range = 1-1000 mv.
(12/PL410) 10	CHLORINE FEEDER:	4	OLIN PULSAR II, # PCP 3000, 2.8 TO 48.0 LBS PER DAY FEED RATE.
11	CHLORINE PUMP:	2	TEEL, MODEL # 2P091, MULTI STAGE BOOSTER PUMP, 3/4 H.P., 115/230 VOLT, SINGLE PHASE
(13/PL410) 12	ACID FEEDER:	1	117 RAT[illegible]
	ACID STORAGE:	1	CHANGE acid storage from 1A Series to Chemtainer, DC Series, 500 gallon, 59" diameter, 71" high, with 8" manway. Suitable for Sodium Hypochlorite. Provide with concrete equipment pad. (2)
(8/PL400) 13	AUTO FILL:	1	CLA-VAL CO. #124-01A, 1-1/2" CLA-VALVE W/ CF1 FLOAT CONTROLLER, PROVIDE FLOAT ROD LENGTH AS REQUIRED.
(7/PL410) 14	FLOWMETERS:		DIETRICH STANDARD, EAGLE EYE SERIES, GCR STAINLESS STEEL ANNUBAR, SADDLE MOUNTED. WALL MOUNT METER DISPLAY.
	(MAIN):	1	RANGE 0 - 4000 G.P.M.
	(RETURNS):	4	
	0"-24" DEEP AREA		RANGE 0 - 1800 G.P.M.
	24"-48" DEEP AREA		RANGE 0 - 1200 G.P.M.
	48"-60" DEEP AREA		RANGE 0 - 800 G.P.M.
	PLUNGE POOL		RANGE 0 - 600 G.P.M.

NOTE: MINIMUM FOUR (4) INCH THICK HOUSEKEEPING PAD IS REQUIRED UNDER HEATERS, ACID STORAGE TANK, AND PULSAR UNITS. MINIMUM 8" THICK HOUSEKEEPING PAD IS REQUIRED UNDER TEEL CHLORINE PUMPS. (1)

Items 10, 11 deleted from base bid. Include as an alternate. (2)

NOTE: CURRENT CHARACTERISTICS MAY VARY. IT IS THE RESPONSIBILITY OF THE CONTRACTOR TO VERIFY VOLTAGE PRIOR TO ORDERING PUMPS.

MECHANICAL EQUIPMENT LIST — PL400-9 — SCALE: NONE

SECTION 13150 CONTRACTOR SHALL:

1. VERIFY ALL OPENINGS, PENETRATIONS, AND ELEVATIONS, AND PROVIDE SHOP DRAWINGS TO POOL ENGINEER.
2. COORDINATE ALL PIPING & EMBEDMENTS WITH AFFECTED TRADES.
3. REFER TO STRUCTURAL DRAWINGS FOR FUTURE CORED OPENINGS.
4. REFER TO ARCHITECTURAL PLANS FOR ACTUAL ROOM DIMENSIONS AND FINISHED FLOOR ELEVATIONS.
5. SEE PL300-2 FOR REINFORCEMENT AT PIPE PENETRATIONS.
6. SUPPORT PIPES PER PL400-2
7. ALL CONNECTIONS & HANGERS IN SURGE TANK TO BE OF STAINLESS STEEL.

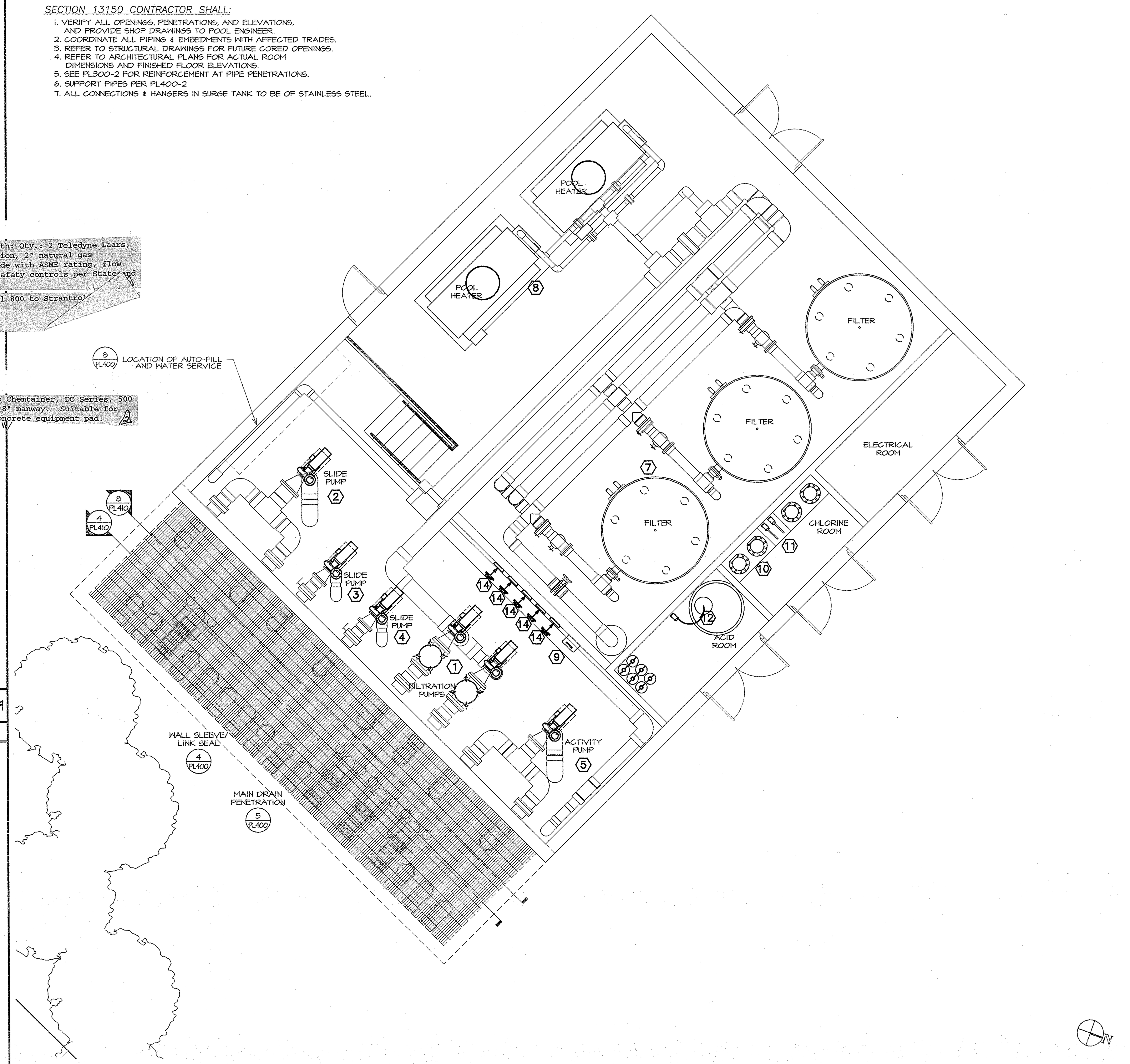

MECHANICAL ROOM PLAN — PL400-1 — SCALE: 1/4"=1'0"

GRAEF ANHALT SCHLOEMER and Associates Inc.
345 North 95th Street
Milwaukee, Wisconsin 53226
414 259-1500
FAX 259-0037

Other Offices Located in:
Green Bay, Wisconsin
Madison, Wisconsin
Chicago, Illinois
Colorado Springs, Colorado

WATER TECHNOLOGY, INC.
Aquatic Designers and Engineers
Atlanta, GA • Beaver Dam, WI • Cedar Rapids, IA
P.O. Box 614 / W9684 Beaverland Parkway
Beaver Dam, Wisconsin 53916
Voice: 414-887-7375 Fax: 414-887-7999

©Copyright WATER TECHNOLOGY, INC. 1995
This Document and the ideas, renderings and other contents contain therein are the sole property of Water Technology, Inc. and may not be disseminated, copied, reproduced or otherwise used without prior written consent of Water Technology, Inc.

WTI PROJECT # 95023

PROJECT NAME:
GREENFIELD AQUATIC CENTER

SHEET TITLE:
POOL MECHANICAL ROOM PLAN

NO.	DATE	REVISIONS	BY
2	01/02/96	REISSUED	SMF
1	07/10/95	ADDENDUM #1	SMF

PROJECT NUMBER:
DATE: 01/02/96
DRAWN BY: SMF
CHECKED BY: DGM
PROJECT MANAGER: DGM
FILE NAME:

SHEET NUMBER
PL400

42269
13-A17-212
P-14-4-42