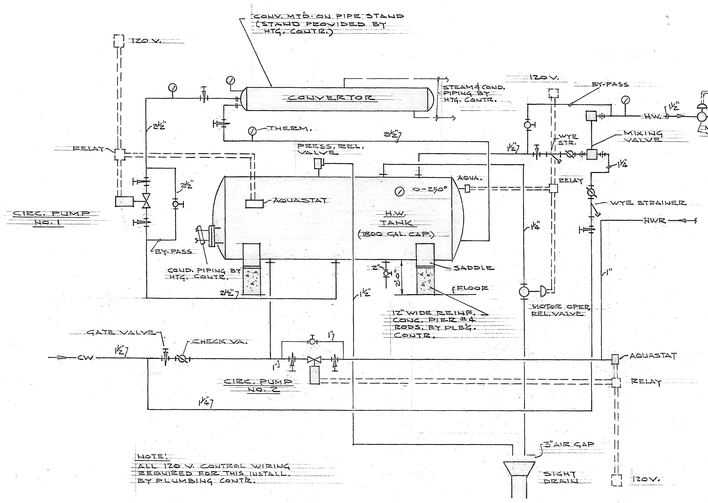


H.W. TANK PIPING CONN'S. (RM. 44)

NO SCALE

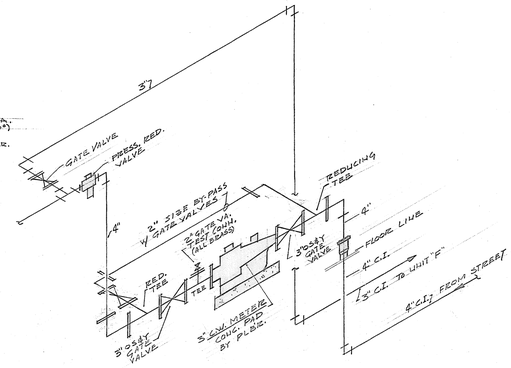


WATER METER DETAIL

NO SCALE

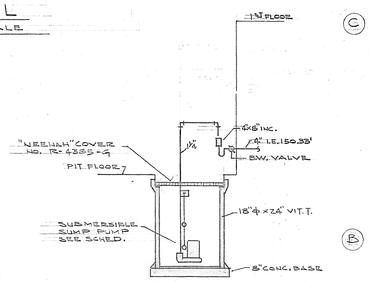


SUMP PUMP DETAIL

NO SCALE

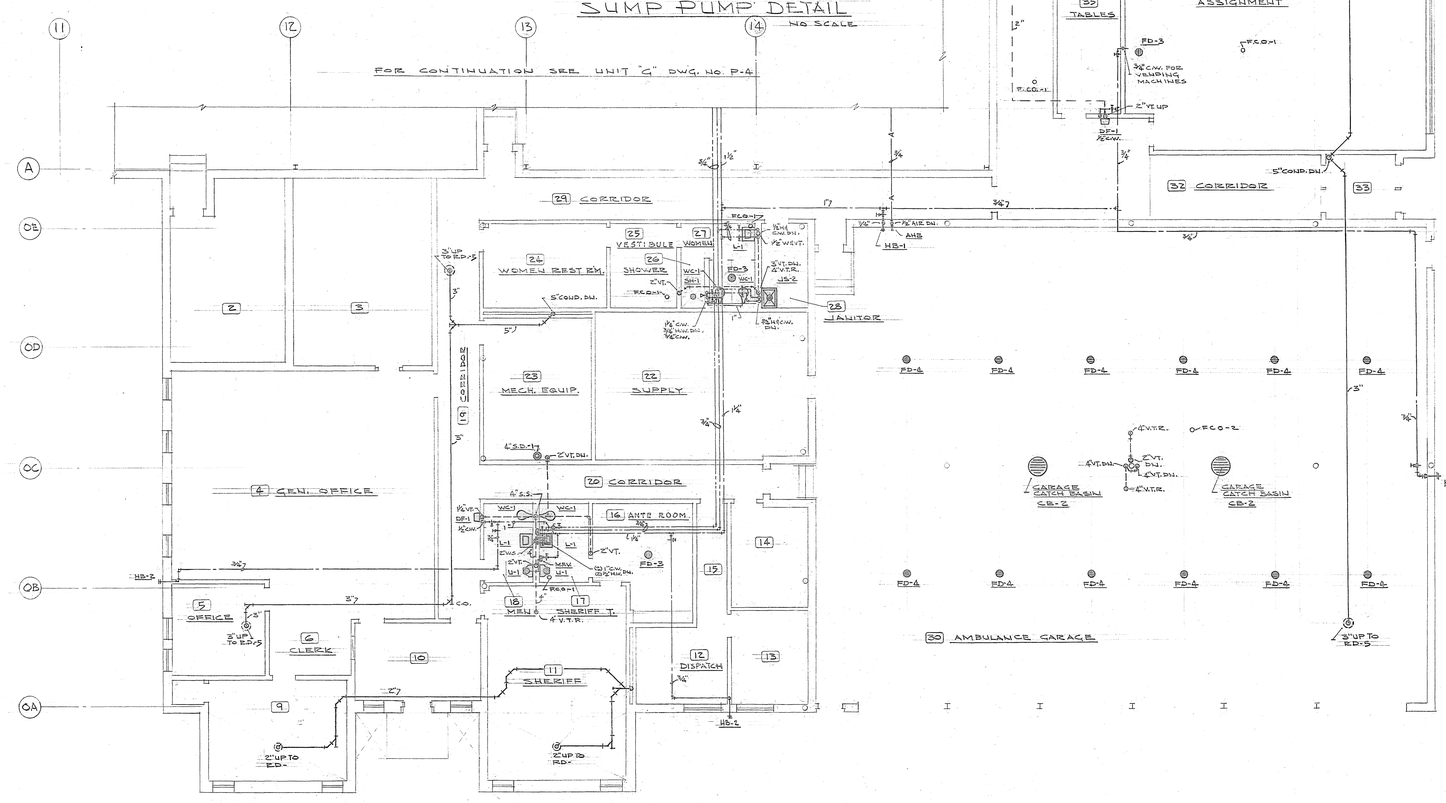


OFFICE FLOOR PLAN SCALE: 1/8"=1'-0"

UNIT "O"

N

PLUMBING

UNIT "O" FLOOR PLAN 1/8"=1'-0"

## STARTER SCHEDULE

| EQUIPMENT DESCRIPTION | EQUIP LOC. | H.P. | CURRENT | STARTER TYPE | STARTER LOC. | ELEC. INTERLOCK | SPECIAL EQUIPMENT BY PLUMBING CONTR |
|---|---|---|---|---|---|---|---|
| CIR. PUMP NO. 1 | 44 | 1/6 | 110-60-1 | BUL-709 S.P. | ON WALL | AQUASTAT | AQUASTAT & RELAY |
| NO. 2 | 44 | 1/6 | ↓ | BUL-600 TAX 142 | ↓ | ↓ | ↓ |
| NO. 3 | R-11 | 1/6 | | | | | |
| SUMP PUMP | NO. 26 SER. AISLE | 1 | 440-60-3 | BUL-712 J.P.T. | 8'-0" AFF FLOOR | FLOAT SW. | |
| AIR COMPRESSOR | PLATFORM | 1½ | ↓ | ↓ | ↓ | PRESS SW. | LEAD-LAG PRESS. SW. SELECTOR SW (110 VOLT) |
| | ↓ | 1½ | | | | | |
| WATER COOLER | AS SHOWN | 1/16 | 110-60-1 | — | | — | — |
| URINAL | AS SHOWN | — | 110-60-1 | — | — | DOOR | DOOR SWITCH & 5 MIN. TIMER |
| SUMP PUMP | PIT | 1/3 | 110-60-1 | — | — | — | PLUG RECEPT. (W.P.) |

## CIRCULATING PUMP SCHEDULE

| NO | SERVICE | TYPE | TEMP. | G.P.M. | HEAD FT. | R.P.M. | HP | CURRENT | REMARKS |
|---|---|---|---|---|---|---|---|---|---|
| 1 | DOMESTIC H. W. | BOOSTER BRONZE | 140° F | 60 | 14 | 1750 | 1/3 | 110-60-1 | "B & G" HD3 |
| 2 | ↓ | ↓ | ↓ | 10 | 16 | | 1/6 | | "B & G" 1" PR |
| 3 | | | | 10 | 16 | | 1/6 | | |

## SUMP PUMP SCHEDULE

| NO | SERVICE | TYPE | G.P.M. | H.D. FT. | COVER DIA. | R.P.M. | HP | CURRENT | REMARKS |
|---|---|---|---|---|---|---|---|---|---|
| 1 | RETENTION BASIN | BILGE | 60 | 20 | 30" | 1750 | 1 | 440-60-3 | CHICAGO PUMP LC-27 ※ |
| 2 | UTILITY PIT | SUMP | 10 | 14 | 18" | 1750 | 1/3 | 110-60-1 | " " SU |

※ NOTE: MOTOR & CONTROLS EXPLOSION PROOF

## CONVERTOR SCHEDULE

| NO | SERVICE | STEAM PRESS. | G.P.M. 40°-140° | WATER P.D. | OVERALL LENGTH | DIA. | HTG SURFACE | REMARKS |
|---|---|---|---|---|---|---|---|---|
| 1 | CONDENSATE | 1150# 220°-120° | | | 10'-0" | 10 | 147 | "B & G" TCY 10120 |
| 2 | HOT WATER | 25 | 60 | 5.4 | 6'-0" | 8 | 46 | "B & G" SU BG-2 |

## HOT WATER TANK SCHEDULE

| NO | SERVICE | GAL CAP. | DIA. | LENGTH | WORKING PRESSURE | CODE | LINING | SUPPORT | REMARKS |
|---|---|---|---|---|---|---|---|---|---|
| 1 | GARAGE | 1800 | 6'-0" | 10'-0" | 125 | ASME | PRE CRETE | SADDLE | "B & G" |

## HOT WATER HEATER SCHEDULE

| NO. | LOCATION | GAL. CAP. | DIA. | FLUE DIA. | WORKING PRESSURE | BURNER IN PUT | CONT | APPROVAL | REMARKS |
|---|---|---|---|---|---|---|---|---|---|
| 1 | FOREMANS SHOP | 85 | 28 | 7" | 125 | 240 GPH | SHUT-OFF 100% | ASME, AGA, NSF | "DAY & NIGHT" 85-200 TSB |

AS-BUILT DRAWING

DATE 7-22-70

RING & DUCHATEAU, INC. - CONSULTING ENGINEERS

**CENTRAL GARAGE FACILITY**
**FOR**
**MILWAUKEE COUNTY**
10320 WATERTOWN PLANK ROAD
WAUWATOSA, WISCONSIN

| | | | |
|---|---|---|---|
| JOB 554 | WILLIAM P. KRAMER ARCHITECT 611 NORTH BROADWAY MILWAUKEE, WISCONSIN | DWG P-6. | |
| DATE 15-11-66 | | REV 7 | OF |

35601 02-F-10-065

36