LIGHTING SYMBOLS

- SINGLE HEAD POLE FIXTURE
- DOUBLE HEAD POLE FIXTURE

POWER & DIAGRAMS

- DUPLEX RECEPTACLE – MOUNTED 18" AFF.
- FUSED DISCONNECT SWITCH.
- CIRCUIT BREAKER – AMPS, POLES.
- METER.
- METER.
- ELECTRICAL DISTRIBUTION PANEL – EXISTING
- ELECTRICAL DISTRIBUTION PANEL – NEW
- GROUND
- OR T TRANSFORMER

MISCELLANEOUS SYMBOLS

- INDICATES DETAIL NUMBER
- SEE DETAIL
- INDICATES SHEET NUMBER
- INDICATES NOTE NUMBER
- SEE NOTE
- INDICATES SHEET NUMBER

CIRCUIT DESIGNATIONS

- BRANCH CIRCUIT – COMMON CONTROL, INCLUDES GREEN GROUND WIRE, NEUTRAL AND PHASE WIRES.
- BRANCH CIRCUIT – SEPARATE CONTROL, INCLUDES GREEN GROUND WIRE, NEUTRAL AND PHASE WIRES.

SPECIAL SYSTEMS SYMBOLS

- JUNCTION BOX

SYMBOLS LIST NOTE:

ANY SYMBOLS UTILIZED ON THE FLOOR PLANS NOT OTHERWISE ON THE SYMBOLS LIST SHALL BE BROUGHT TO THE ATTENTION OF THE ENGINEERS PRIOR TO BIDDING FOR CLARIFICATION.

FEEDER SCHEDULE

NO	FEEDER RATING (AMPS)	# OF SETS	ø+N CONDUCTORS NO	ø+N CONDUCTORS SIZE	ISOLATED GROUND NO	ISOLATED GROUND SIZE	EQUIP. GROUND NO	EQUIP. GROUND SIZE	CONDUIT PER SET	SEE NOTE
1	800	2	4	500			1	1/0	3–1/2	
2	60 (TVSS)	1	4	2			1	8	1–1/4	
3	400	1	4	600			1	3	4	
4	275	1	4	300			1	4	2 1/2	
5	250	1	4	250			1	4	2 1/2	
6	175	1	4	2/0			1	6	2	
7	125/150	1	4	1/0			1	6	2	
8	70	1	4	4			1	8	1–1/4	
9	225	1	4	4/0			1	4	2 1/2	

PANEL SCHEDULE

NO.	CIRCUIT BREAKERS QTY.	POLE	AMP.	QTY.	POLE	AMP.	1 POLE SPACES	MAINS BUSING	VOLTS	AIC	LOCATION	CABINET	REMARKS	SEE NOTE
C	34	1	20	1	3	50	0	225A MLO	208V/120V 3ø, 4W	22kAIC	BOILER ROOM	SURFACE	42 CIRCUITS	
	3	1	30											
	1	2	40											
PP1 (L)	6	3	20	9	1	20	0	250A MLO	208V/120V 3ø, 4W	22kAIC	BOILER ROOM	SURFACE	54 CIRCUITS FEED THROUGH LUGS	
	3	3	30	2	3	35								
	2	3	70											
PP1 (R)	11	3	20	2	3	35	0	250A MLO	208V/120V 3ø, 4W	22kAIC	BOILER ROOM	SURFACE	54 CIRCUITS	
	2	3	70											
	3	1	20											
T	33	1	20				0	225A MLO	208V/120V 3ø, 4W	22kAIC	BOILER ROOM	SURFACE	42 CIRCUITS	
	3	2	50											
	1	3	20											
1	5	3	100	1	2	60	15	400A MLO	208V/120V 3ø, 4W	22kAIC	BOILER ROOM	SURFACE	42 CIRCUITS	
	10	1	20											
D	42	1	20				0	225A MLO	208V/120V 3ø, 4W	22kAIC	BASEMENT	SURFACE	42 CIRCUITS	
F2	15	1	20	1	3	50	0	225A MLO	208V/120V 3ø, 4W	22kAIC	BASEMENT	SURFACE	42 CIRCUITS	
	5	3	30	1	3	80								
	1	3	40											
P4 (L)	21	1	20				12	225A MLO	208V/120V 3ø, 4W	22kAIC	BASEMENT	SURFACE	42 CIRCUITS FEED THRU LUGS	
	2	3	20											
	2	3	40											
P4 (R)	30	3	20				12	225A MLO	208V/120V 3ø, 4W	22kAIC	BASEMENT	SURFACE	42 CIRCUITS	

PANEL SCHEDULE GENERAL NOTES:

1. FAULT CURRENT INDICATED IS PROVIDED FOR BID PURPOSES ONLY. ALL EQUIPMENT INCLUDING CIRCUIT BREAKERS SHALL BE FULLY RATED, SERIES RATING NOT ACCEPTABLE. THE CONTRACTOR SHALL VERIFY WITH A WRITTEN STATEMENT FROM THE UTILITY THE MAXIMUM SHORT CIRCUIT CAPACITY. USING THE MAXIMUM FAULT, PREPARE A SHORT CIRCUIT ANALYSIS, COORDINATION STUDY AND ARC FLASH STUDY OF THE ELECTRICAL DISTRIBUTION SYSTEM. THIS STUDY WITH THE UTILITY LETTER SHALL BE SUBMITTED WITH THE ELECTRICAL DISTRIBUTION SHOP DRAWINGS.

2. PROVIDE TERMINATION LUGS COMPATIBLE WITH FEEDER SIZE.

3. (L) INDICATES LEFT PANEL, (R) INDICATES RIGHT PANEL OF DOUBLE TUB PANELS.

4. (G) INDICATES GFI CIRCUIT BREAKER, (S) INDICATES SHUNT TRIP CIRCUIT BREAKER.

5. PER ARTICLE 210.4, MULTIWIRE BRANCH CIRCUITS SHALL BE PROVIDED WITH A MEANS THAT WILL SIMULTANEOUSLY DISCONNECT ALL UNGROUNDED CONDUCTORS. THIS CONTRACTOR IS RESPONSIBLE FOR VERIFYING THE CURRENT BRANCH CIRCUIT DISTRIBUTION AND MODIFYING THE CIRCUIT BREAKER POLES PRIOR TO ORDERING GEAR.

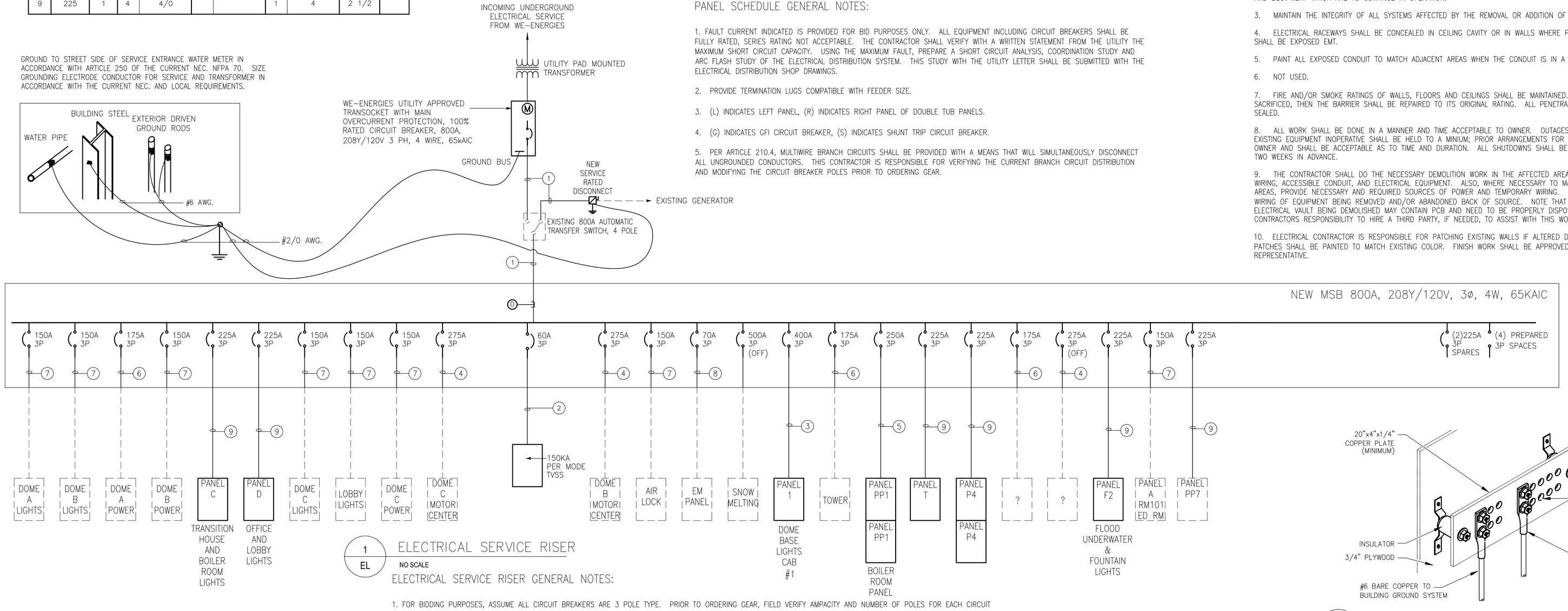

1 EL ELECTRICAL SERVICE RISER

NO SCALE

ELECTRICAL SERVICE RISER GENERAL NOTES:

1. FOR BIDDING PURPOSES, ASSUME ALL CIRCUIT BREAKERS ARE 3 POLE TYPE. PRIOR TO ORDERING GEAR, FIELD VERIFY AMPACITY AND NUMBER OF POLES FOR EACH CIRCUIT BREAKER.

2. FIELD VERIFY IF BREAKERS IN THE "OFF" POSITION ARE STILL IN USE. IF NOT IN USE, DO NOT PROVIDE NEW CIRCUIT BREAKERS.

3. ALL EXISTING PANELS BEING REPLACED WITH NEW SHALL BE FED WITH A NEW OVERHEAD FEEDERS AND RACEWAYS. (PANELS D, P4, F2, 1, T, PP1 AND C). EXISTING CONDITION OF U/G CONDUITS IS UNKNOWN SO DO NOT RE–USE. APPROXIMATE FEEDER DISTANCES ARE SHOWN ON THE FLOORPLAN BUT IT IS THE E.C. RESPONSIBILITY TO FIELD MEASURE EXACT DISTANCES.

4. ALL SPLICES IN GEAR SHALL BE MADE WITH COMPRESSION TYPE CONNECTORS.

ABBREVIATIONS

A/E	ARCHITECT/ENGINEER
AF	AMP FUSE
AFC	AVAILABLE FAULT CURRENT
AFF	ABOVE FINISHED FLOOR
ARCH	ARCHITECT
AFG	ABOVE FINAL GRADE
AHJ	AUTHORITY HAVING JURISDICTION
AR	AS REQUIRED
AS	AMP SWITCH
ATS	AUTOMATIC TRANSFER SWITCH
BKR	BREAKER
BFG	BELOW FINAL GRADE
C	MOUNTED 6" ABOVE COUNTER
CAB	CABINET
CB	CIRCUIT BREAKER
cd	CANDELA
CKT	CIRCUIT
CLG	CEILING
CONC	CONCRETE
CP	CONTROL PANEL
CS	COMBINATION STARTER/DISC. SWITCH
D	DISCONNECT SWITCH
DISC	DISCONNECT SWITCH
DLS	DUAL LEVEL SWITCH
DN	DOWN
DNLT	DOWN LIGHT
EWC	ELECTRIC WATER COOLER
E.C	ELECTRICAL CONTRACTOR
ELEV	ELEVATION
EMT	ELECTRICAL METALLIC TUBING
ENT	ELECTRICAL NON–METALLIC TUBING
EP	EXPLOSION PROOF
ER	EXISTING TO BE REMOVED
EXP	EXPOSED
EXR	EXISTING IN NEW LOCATION
EX	EXISTING TO REMAIN
EXT	EXISTING TO BE RELOCATED
F	FURNISHED
FBO	FURNISHED BY OTHER
FIXT	FIXTURE
FLUOR	FLUORESCENT
G.C.	GENERAL CONTRACTOR
GFI	GROUND FAULT INTERRUPTING
GRC	GALVANIZED RIGID CONDUIT
GYP	GYPSUM BOARD
HOA	HAND–OFF–AUTO SELECTOR SWITCH
HP	HORSEPOWER
HVAC / HV	HEATING, VENTILATING, AND AIR CONDITIONING CONTRACTOR
HW	HEAVYWALL
IMC	INTERMEDIATE METAL CONDUIT
I	INSTALLED
IU	INTEGRAL TO UNIT
JB	JUNCTION BOX
KW	KILOWATT
LIG	LAY–IN GRID
LOC	LOCATION
LTG	LIGHTING
MAG	MAGNETIC STARTER
MAN	MANUAL STARTER
MC	MECHANICAL CONTRACTOR
MLO	MAIN LUGS ONLY
MSB	MAIN SWITCHBOARD
MTD	MOUNTED
MTS	MANUAL TRANSFER SWITCH
NU	NEAR UNIT
NIC	NOT IN CONTRACT
NL	NIGHT LIGHT
O	OTHERS
OC	ON CENTER
ORS	OVER RIDE SWITCH
OU	ON UNIT
P	POLE
PC	PHOTOCELL
PEND	PENDANT
PLBG	PLUMBING CONTRACTOR
PNL	PANEL
PB	PUSH–BUTTON
R	RECEPTACLE
RAI	REMAIN AS IS
REC	RECESSED
SS	SWITCH STATION
SURF	SURFACE
SUSP	SUSPENDED
SW	SWITCH
TC	TIME CLOCK
TCC	TEMPERATURE CONTROL CONTRACTOR
TYP	TYPICAL
UM	UNIT MANUFACTURER
VER	VERIFY
VFD	VARIABLE FREQUENCY DRIVE
W	WIRED
WP	WEATHERPROOF
XFMR	TRANSFORMER

GENERAL RENOVATION/DEMOLITION NOTES:

1. ELECTRICAL DRAWINGS ARE BASED ON THE BEST INFORMATION AVAILABLE. FOR AREAS BEING REMODELED, WORK SHOWN REFLECTS INFORMATION SHOWN ON AS–BUILT PLANS AND FIELD OBSERVATION; IT IS NOT GUARANTEED 100% ACCURATE. THIS CONTRACTOR MUST FIELD VERIFY CONDITIONS AND MAKE NECESSARY ADJUSTMENTS WITHOUT EXTRA COSTS TO THE PROJECT TO SUIT ACTUAL NEEDS.

2. THE CONTRACTOR SHALL REWIRE/REROUTE/RELOCATE, AS REQUIRED DUE TO CONSTRUCTION, ALL EXISTING CIRCUITS AND EQUIPMENT WHICH ARE TO CONTINUE IN OPERATION.

3. MAINTAIN THE INTEGRITY OF ALL SYSTEMS AFFECTED BY THE REMOVAL OR ADDITION OF ELECTRICAL EQUIPMENT.

4. ELECTRICAL RACEWAYS SHALL BE CONCEALED IN CEILING CAVITY OR IN WALLS WHERE POSSIBLE, OTHERWISE RACEWAY SHALL BE EXPOSED EMT.

5. PAINT ALL EXPOSED CONDUIT TO MATCH ADJACENT AREAS WHEN THE CONDUIT IS IN A FINISHED AREA.

6. NOT USED.

7. FIRE AND/OR SMOKE RATINGS OF WALLS, FLOORS AND CEILINGS SHALL BE MAINTAINED. IF THE INTEGRITY IS SACRIFICED, THEN THE BARRIER SHALL BE REPAIRED TO ITS ORIGINAL RATING. ALL PENETRATIONS SHALL BE PROPERLY SEALED.

8. ALL WORK SHALL BE DONE IN A MANNER AND TIME ACCEPTABLE TO OWNER. OUTAGES AND OTHER WORK RENDERING EXISTING EQUIPMENT INOPERATIVE SHALL BE HELD TO A MINIUM; PRIOR ARRANGEMENTS FOR EACH SHALL BE MADE WITH OWNER AND SHALL BE ACCEPTABLE AS TO TIME AND DURATION. ALL SHUTDOWNS SHALL BE COORDINATED WITH OWNER TWO WEEKS IN ADVANCE.

9. THE CONTRACTOR SHALL DO THE NECESSARY DEMOLITION WORK IN THE AFFECTED AREAS INCLUDING THE REMOVAL OF WIRING, ACCESSIBLE CONDUIT, AND ELECTRICAL EQUIPMENT. ALSO, WHERE NECESSARY TO MAINTAIN SERVICE IN OTHER AREAS, PROVIDE NECESSARY AND REQUIRED SOURCES OF POWER AND TEMPORARY WIRING. REMOVE ALL CONDUIT AND WIRING OF EQUIPMENT BEING REMOVED AND/OR ABANDONED BACK OF SOURCE. NOTE THAT THE TRANSFORMERS IN THE ELECTRICAL VAULT BEING DEMOLISHED MAY CONTAIN PCB AND NEED TO BE PROPERLY DISPOSED OF. IT IS THIS CONTRACTORS RESPONSIBILITY TO HIRE A THIRD PARTY, IF NEEDED, TO ASSIST WITH THIS WORK.

10. ELECTRICAL CONTRACTOR IS RESPONSIBLE FOR PATCHING EXISTING WALLS IF ALTERED DURING CONSTRUCTION. NEW PATCHES SHALL BE PAINTED TO MATCH EXISTING COLOR. FINISH WORK SHALL BE APPROVED BY THE OWNER'S REPRESENTATIVE.

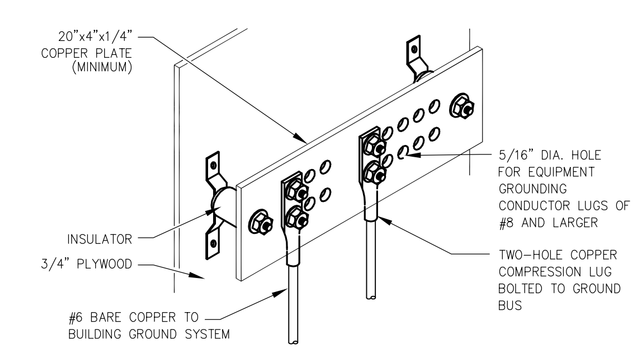

2 EL INTERSYSTEMS GROUND BAR DETAIL

NTS

NOTES:

1. LENGTH OF GROUND BAR SHALL BE ADEQUATE TO GROUND ALL EQUIPMENT
2. LOCATE ADJACENT TO NEW MAIN SWITCHBOARD.

HARWOOD ENGINEERING CONSULTANTS, LTD

255 N 21st St, Milwaukee, WI 53233
414.475.5554 414.475.5698 fax harwood@hecl.com

Revisions

SYMBOLS, ABBREVIATIONS AND GENERAL NOTES

Sheet

SCALE:

Project

MITCHELL PARK ELECTRICAL SERVICE UPGRADE PROJECT

Date

03/16/2016

Project No.
HECL: 015–1098.00
COUNTY: P383–15629

Sheet No.

EL 2