ADDENDUM NUMBER 2

MARTIN LUTHER KING COMMUNITY CENTER
HVAC SYSTEM REPLACEMENT
Site #773, Bldg. #2110
1531 West Vliet Street
Milwaukee, WI 53205

Project Number: P202-13610
Notice Number: 6879

Date of Addendum: December 2, 2013

This Addendum to the Contract Documents is issued to modify, explain or correct the original documents, dated November 1, 2013, and is hereby made part of the Contract Documents. Acknowledge receipt of this Addendum in the space provided on the Bid Form, or bid may be rejected.

BIDDING AND CONTRACT DOCUMENTS

BID DUE DATE

CHANGE Bid Due Date to December 11, 2013 at 2:00 P.M.

Section 23 09 25 – Sequence of Operation

ADD the following under 3.02, C:

"8. CARBON DIOXIDE SENSOR CONTROL

a. Self-Calibrating CO_2 Sensors shall be placed to take a representative sample of CO_2 concentrations in each major zone. Provide a maximum coverage of 5,000 square feet per CO_2 Sensor. Sensors are recommended to be mounted 4' – 6' above the floor.

b. ECONOMIZER CONTROL: The CO_2 Sensors shall provide control to the air handler outside air damper whenever the fresh air economizer cannot be used. If outside air is suitable for free cooling and there is a demand for cooling the economizer shall have priority.

c. MINIMUM POSITION FOR CO_2 CONTROL: The system shall be configured to provide a base ventilation rate (BVR)to the space to control non-occupant related sources in the space.

d. MAXIMUM POSITION FOR CO_2 CONTROL: The system shall be configured to provide for a maximum position of the outside air damper to equal the design ventilation rate (DVR).

e. CONTROL: The outside air damper will be modulated between the minimum position described above and the maximum position described to the space based on CO_2 concentrations. A proportional control shall be used to modulate the damper based on CO_2 readings between a lower and upper control limit to ensure that 7.5 cfm per person of outside air is provided at all times based on actual occupancy.

1. UPPER CONTROL LIMIT: The proportional control strategy shall position the damper to provide the DVR when the CO_2 levels are equivalent to the equilibrium concentration of CO_2 corresponding to the target CFM per person ventilation rate in the space. The upper set point is 700 ppm above the outside air CO_2 level (Field Adjustable).

2. LOWER CONTROL LIMIT: The proportional control strategy shall position the damper in the minimum position until indoor levels exceed a certain CO_2 threshold above the outside levels. The lower set point is 200 ppm above the outside air CO_2 level (Field Adjustable).

3. MULTIPLE SENSORS CONTROLLING A SINGLE AHU: Control should be based on the highest CO_2 concentration measured in all spaces served by the air handler."

Section 26 32 01 – Engine Generator Unit (Natural Gas)
ADD section in its entirety.

Section 26 36 23 – Automatic Transfer Switches
ADD section in its entirety.

DRAWINGS

-MECHANICAL-

ME100 – Mechanical-Electrical Schedules
Return/Relief Fan Schedule:
ADD Note E1: "Provide 3P-Circuit Breaker in existing panel. Update panel schedule."
ADD Note E2: "Provide 1P-20A-Circuit Breaker in existing panel EM."
ADD RF-3 fed from PB-1.
ADD Note E1 to RF-3.
ADD RF-4 fed from PA-1.
ADD Note E1 to RF-4.
ADD RF-5 fed from Ex. Circuit.
ADD EF-1 fed from EM-1.
ADD Note E2 to EF-1.

Air Cooled Chiller Schedule:
ADD ACC-1 fed from MSB.

Pump Schedule:
ADD Note E1: "Furnish and install a duplex receptacle next to pump. Circuit from G-9"
ADD P-1 fed from G-1.
ADD P-2 fed from G-2.
ADD P-3 fed from G-3.
ADD P-4 fed from G-4.
ADD P-5 fed from G-5.
ADD P-6 fed from G-6.
ADD P-7 fed from G-7.
ADD P-8 fed from G-8.
ADD Note E1 to P-9.
ADD P-10 fed from Ex. Circuit.

Gas Fired Hot Water Boiler Schedule:
ADD B-1 fed from G-10.
ADD B-2 fed from G-11.

-ELECTRICAL-

Sheet E100 – Lower Level Power Plan
ADD Panel G and plan notes, see sheet E-1.
ADD Feeder serving ACC-1 on roof and plan notes. See E-2.
ADD Plan Notes, see sheet E-3.
ADD Plan Note 4 to CUH-1, CUH-2 & CUH-3.
ADD Plan Note 6 to Mechanical 147.

Sheet E200 – Ground Floor Power Plan

ADD Legend 100 to drawing and plan notes. See sheet E-4.
ADD Plan Notes, see sheet E-5.
ADD Plan Note 10 to CUH-4, CUH-5, CUH-6, CUH-7, CUH-8, CUH-9, CUH-10 & CUH-11.

Sheet E300 – Electrical Roof Plan

ADD Feeder serving ACC-1, see sheet E-6.
ADD Plan Notes, see sheet E-6.
ADD Plan Notes 1 & 2 to PRV-1, PRV-2, PRV-3, PRV-4, & PRV-5.
ADD Plan Note 1 to PRV-6, see sheet E-6.
ADD Waterproof GFIs located near PRV-1, PRV-2 & PRV-3 shall be circuited to C-1.
ADD Waterproof GFIs located near PRV-4 & PRV-5 shall be circuited to C-2.

Sheet E400 – Electrical Schedules, Details and One Line Riser Diagram

ADD Duct Smoke Detector Detail, see E-7.

-STRUCTURAL-

Sheet S102 – Partial Roof Framing Plans

ADD section cut 3/S102 to plan, see S-10.
ADD note to Partial Roof Framing Plan 1/S102, "TOUCH UP ALL WELDS WITH ZINC RICH PAINT.
ADD details 3, see S-11.
ADD angle call out to detail 6/S102, see S-12.
ADD detail 7, see S-13.
REVISE detail 8/S102, see S-14.

End of Addendum No. 2

Section 26 32 01 - Engine Generator Unit (Natural Gas)

PART 1 - GENERAL

1.01 DESCRIPTION

A. General:
1. Furnish all labor, materials, tools, equipment, and services for all engine generator units as indicated, in accord with provisions of Contract Documents.
2. Completely coordinate work with all other trades.
3. Although such work is not specifically indicated, furnish and install all supplementary or miscellaneous items, appurtenances and devices incidental to or necessary for a sound, secure and complete installation.

B. Related Work Specified Elsewhere:
1. Automatic Transfer Switches: Section 26 36 23.
2. Electrical System Short Circuit Coordination and Arc Flash Study: EC shall review present system and confirm status and suitability.

C. Approval Documents:
1. Prepare and submit all drawings, calculations, and professional seals as required to Federal, State and local authorities having jurisdiction.

D. Provide complete factory assembled generator set equipment with digital (microprocessor-based) electronic controls.

E. Provide startup by a supplier authorized by the manufacturer, and on-site testing of the system.

1.02 CODES AND STANDARDS

A. The generator set installation and on-site testing shall conform to the requirements of the following codes and standards, as applicable. The generator set shall include necessary features to meet the requirements of these standards.
1. CSA 282, 1989 Emergency Electrical Power Supply for Buildings
2. IEEE446 - Recommended Practice for Emergency and Standby Power Systems for Commercial and Industrial Applications
3. NFPA70 - National Electrical Code. Equipment shall be suitable for use in systems in compliance to Article 700, 701, and 702.
4. State and Local Codes.
5. NFPA110 - Emergency and Standby Power Systems. The generator set shall meet all requirements for Level 1 systems. Level 1 prototype tests required by this standard shall have been performed on a complete and functional unit, component level type tests will not substitute for this requirement.

B. The generator set and supplied accessories shall meet the requirements of the following standards:
1. NEMA MG1-1998 part 32. Alternator shall comply with

the requirements of this standard.

C. The control system for the generator set shall comply with the following requirements.
   1. CSA C22.2, No. 14 - M91 Industrial Control Equipment.
   2. EN50082-2, Electromagnetic Compatibility - Generic Immunity Requirements, Part 2: Industrial.
   3. EN55011, Limits and Methods of Measurement of Radio Interference Characteristics of Industrial, Scientific and Medical Equipment.
   4. FCC Part 15, Subpart B.
   5. IEC8528 part 4. Control Systems for Generator Sets
   6. IEC Std 801.2, 801.3, and 801.5 for susceptibility, conducted, and radiated electromagnetic emissions.
   7. UL508. The entire control system of the generator set shall be UL508 listed and labeled.

D. The generator set manufacturer shall be certified to ISO 9001 International Quality Standard and shall have third party certification verifying quality assurance in design/development, production, installation, and service, in accordance with ISO 9001.

1.03 ACCEPTABLE MANUFACTURERS

This system was designed around Cummins Power equipment. Other manufacturers are required to confirm that their equipment complies with the design including, but not limited to, the building structural support. Any modifications needed to accommodate another manufacturer shall be included in the contractor's bid.

A. Generac
B. Kohler
C. Onan/Cummins

1.04 SUBMITTALS (See General Conditions)

A. Shop Drawings:
   1. Submit all components together to permit checking of entire system, coordination between components and coordination of sensing devices required for local and remote derangement signal annunciator.
   2. Provide drawing of controlled ventilation system.
   3. Drawings shall show entire generator assembly. Overall height, width and length shall be shown.

B. Project Data:
   1. Operating and maintenance data.
   2. Owner instructions reports.
   3. Test reports and certifications.

PART 2 - PRODUCTS

2.01 GENERATOR SET

A. Ratings:
   1. The generator set shall operate at 1800 rpm and at a voltage of 208/120 Volts AC, three phase, 4 wire, 60 Hertz as indicated.

2. The generator set shall be rated at 10 kW, 12.5 kVA at 0.8 PF, for standby rating, based on site conditions of: Altitude 1000ft, ambient temperatures up to 110 degrees F.

B. Performance:
1. Voltage regulation shall be plus or minus 0.5 percent for any constant load between no load and rated load for both parallel and non-parallel applications. Random voltage variation with any steady load from no load to full load shall not exceed plus or minus 0.5 percent.
2. Frequency regulation shall be isochronous from steady state no load to steady state rated load. Random frequency variation with any steady load from no load to full load shall not exceed plus or minus 0.25%.
3. The engine-generator set shall be capable of single step load pick up of 100% nameplate kW and power factor, less applicable derating factors, with the engine-generator set at operating temperature.
4. The alternator shall produce a clean AC voltage waveform, with not more than 5% total harmonic distortion at full linear load, when measured from line to neutral, and with not more than 3% in any single harmonic. Telephone influence factor shall be less than 50.

C. Construction:
1. The engine-generator set shall be mounted on a heavy-duty steel base to maintain alignment between components. The base shall incorporate a battery tray with hold-down clamps within the rails
2. All switches, lamps, and meters in the control system shall be oil-tight and dust-tight, and the enclosure door shall be gasketed. There shall be no exposed points in the control (with the door open) that operate in excess of 50 volts.

D. Connections:
1. The generator set load connections shall be mechanical terminations of the number and type as shown on the drawings. Sufficient lug space shall be provided for use with cables of the number and size as shown on the drawings.
2. Power connections to auxiliary devices shall be made at the devices, with required protection located at a wall-mounted common distribution panel.
3. Generator set control interfaces to other system components shall be made on a common, permanently labeled terminal block assembly.

2.02 ENGINE AND ENGINE EQUIPMENT

A. The engine shall be natural gas fueled, radiator and fan cooled. The horsepower rating of the engine at its minimum tolerance level shall be sufficient to drive the alternator and all connected accessories. Engine accessories and features shall include:
1. Complete engine fuel system, including all pressure regulators, strainers, and control valves.

2. Provide an electrical solenoid gas shut-off valve that operates on the generator set battery system located inside the enclosure.
3. An electronic governor system shall provide automatic isochronous frequency regulation. The governing system dynamic capabilities shall be controlled as a function of engine coolant temperature to provide fast, stable operation at varying engine operating temperature conditions. The control system shall actively control the fuel rate and excitation as appropriate to the state of the generator set. Fuel rate shall be regulated as a function of starting, accelerating to start disconnect speed, accelerating to rated speed, and operating in various isochronous or parallel states.
4. Electric starter(s) capable of three complete cranking cycles without overheating.
5. Positive displacement, mechanical, full pressure, lubrication oil pump.
6. Full flow lubrication oil filters with replaceable spin-on canister elements and dipstick oil level indicator.
7. Replaceable dry element air cleaner with restriction indicator.
8. Flexible fuel lines and muffler with flexible connection.
9. Engine mounted battery charging alternator, 37-ampere minimum, and solid-state voltage regulator.
10. If pressure regulator is required, it shall be located inside the enclosure.

B. Coolant Heater:
1. Engine mounted, thermostatically controlled, coolant heater for engine. Heater voltage shall be 120V. The coolant heater shall be UL499 or UL2200 listed and labeled.
2. The coolant heater shall be installed on the engine with high temperature silicone hose connections. The coolant heater installation shall be specifically designed to provide proper venting of the system. The coolant heaters shall be installed using quick disconnect couplers to isolate the heater for replacement of the heater element. The quick disconnect/automatic sealing couplers shall allow the heater element to be replaced without draining the engine cooling system or significant coolant loss.
3. The coolant heater shall be provided with a 24VDC thermostat, installed at the engine thermostat housing. An AC power connection box shall be provided for a single AC power connection to the coolant heater system.
4. The coolant heater shall be sized as recommended by the engine manufacturer to warm the engine to a minimum of 100F (40C) in a 40F ambient, in compliance with NFPA110 requirements, or the temperature required for starting and load pickup requirements of this specification.

C. Provide vibration isolators, spring/pad type or as recommended by the manufacturer, quantity as recommended by the generator set manufacturer.

D. Starting and Control Batteries shall be calcium/lead antimony type, 24 volt DC, sized as recommended by the engine manufacturer, complete with battery cables and connectors.

E. Provide a minimum 10 amp battery charger for each generator set.
   1. The charger shall be capable of charging a fully discharged battery without damage to the charger.
   2. Charger shall be located in enclosure.

F. Provide exhaust silencer for engine of size and type as recommended by the generator set manufacturer and approved by the engine manufacturer. The silencer shall be critical grade. Exhaust system shall be installed according to the engine manufacturer's recommendations and applicable codes and standards. Muffler must be insulated to minimize heat radiation.

2.03 AC GENERATOR

A. The AC generator shall be; synchronous, four pole, 2/3 pitch, revolving field, drip-proof construction, single prelubricated sealed bearing, air cooled by a direct drive centrifugal blower fan, and directly connected to the engine with flexible drive disc. All insulation system components shall meet NEMA MG1 temperature limits for Class H insulation system. Actual temperature rise measured by resistance method at full load shall not exceed 125 degrees Centigrade.

B. The generator shall be capable of delivering rated output (kVA) at rated frequency and power factor, at any voltage not more than 5 percent above or below rated voltage.

C. A permanent magnet generator (PMG) shall be included to provide a reliable source of excitation power for optimum motor starting and short circuit performance. The PMG and controls shall be capable of sustaining and regulating current supplied to a single phase or three phase fault at approximately 300% of rated current for not more than 10 seconds.

D. The subtransient reactance of the alternator shall not exceed (16) percent, based on the standby rating of the generator set.

2.04 GENERATOR SET CONTROL

The generator set shall be provided with a microprocessor-based control system that is designed to provide automatic starting, monitoring, and control functions for the generator set. The control shall be mounted on the generator set. The control shall be vibration isolated and prototype tested to verify the durability of all components in the system under the vibration conditions encountered.

The generator set mounted control shall include the following features and functions:

A. Control Switches:

1. MODE SELECT Switch. The mode select switch shall initiate the following control modes. When in the RUN or MANUAL position the generator set shall start, and accelerate to rated speed and voltage as directed by the operator. A separate push-button to initiate starting is acceptable. In the OFF position the generator set shall immediately stop, bypassing all time delays. In the AUTO position the generator set shall be ready to accept a signal from a remote device to start and accelerate to rated speed and voltage.
2. EMERGENCY STOP Switch. Switch shall be Red "mushroom-head" push-button. Depressing the emergency stop switch shall cause the generator set to immediately shut down, and be locked out from automatic restarting.
3. RESET Switch. The RESET switch shall be used to clear a fault and allow restarting the generator set after it has shut down for any fault condition.
4. PANEL LAMP Switch. Depressing the panel lamp switch shall cause the entire panel to be lighted with DC control power. The panel lamps shall automatically be switched off 10 minutes after the switch is depressed, or after the switch is depressed a second time.

B. Generator Set AC Output Metering. The generator set shall be provided with a metering set including the following features and functions:

1. Digital metering set, 1% accuracy, to indicate generator RMS voltage and current, frequency, output current, output KW, KW-hours, and power factor. Generator output voltage shall be available in line-to-line and line-to-neutral voltages, and shall display all three-phase voltages (line to neutral or line to line) simultaneously.
2. The control system shall log total number of operating hours, total kWH, and total control on hours, as well as total values since reset.

C. Generator Set Alarm and Status Display:

1. The generator set control shall include LED alarm and status indication lamps. The lamps shall be high-intensity LED type. The lamp condition shall be clearly apparent under bright room lighting conditions. Functions indicated by the lamps shall include:
   a. The control shall include five configurable alarm-indicating lamps. The lamps shall be field adjustable for any status, warning, or shutdown function monitored by the genset. They shall also be configurable for color, and control action (status, warning, or shutdown).
   b. The control shall include lamps to indicate that the generator set is running at rated frequency and voltage, and that a remote start signal has been received at the generator set. The running signal shall be based on actual sensed voltage and frequency on the output terminals of the generator set.
   c. The control shall include a flashing lamp to indicate that the control is not in automatic state, and red common shutdown lamp.

d. The control shall include a common warning indication lamp.

2. The generator set control shall indicate the existence of the warning and shutdown conditions on the control panel. All conditions indicated below for warning shall be field-configurable for shutdown. Conditions required to be annunciated shall include:
   - low oil pressure (warning)
   - low oil pressure (shutdown)
   - oil pressure sender failure (warning)
   - low coolant temperature (warning)
   - high coolant temperature (warning)
   - high coolant temperature (shutdown)
   - high oil temperature (warning)
   - engine temperature sender failure (warning)
   - low coolant level (warning)
   - fail to crank (shutdown)
   - fail to start/overcrank (shutdown)
   - overspeed (shutdown)
   - low DC voltage (warning)
   - high DC voltage (warning)
   - weak battery (warning)
   - low fuel-daytank (warning)
   - high AC voltage (shutdown)
   - low AC voltage (shutdown)
   - under frequency (shutdown)
   - over current (warning)
   - over current (shutdown)
   - short circuit (shutdown)
   - over load (warning)
   - emergency stop (shutdown)
   - (4) configurable conditions

3. Provisions shall be made for indication of four customer-specified alarm or shutdown conditions. Labeling of the customer-specified alarm or shutdown conditions shall be of the same type and quality as the above-specified conditions. The non-automatic indicating lamp shall be red, and shall flash to indicate that the generator set is not able to automatically respond to a command to start from a remote location.

D. Engine Status Monitoring:

1. The following information shall be available from a digital status panel on the generator set control:
   - engine oil pressure (psi or kPA)
   - engine coolant temperature (degrees F or C)
   - engine oil temperature (degrees F or C)
   - engine speed (rpm)
   - number of hours of operation (hours)
   - number of start attempts
   - battery voltage (DC volts)

2. The control system shall also incorporate a data logging and display provision to allow logging of the last 10 warning or shutdown indications on the generator set, as well as total time of operation at various loads, as a percent of the standby rating of the generator set.

E. Engine Control Functions:

1. The control system provided shall include a cycle cranking system, which allows for user selected crank time, rest time, and # of cycles. Initial settings shall be for 3 cranking periods of 15 seconds each, with 15-second rest period between cranking periods.
2. The control system shall include an engine governor control, which functions to provide steady state frequency regulation as noted elsewhere in this specification. The governor control shall include adjustments for gain, damping, and a ramping function to control engine speed and limit exhaust smoke while the unit is starting.
3. The control system shall include time delay start (adjustable 0-300 seconds) and time delay stop (adjustable 0-600 seconds) functions.
4. The control system shall include sender failure monitoring logic for speed sensing, oil pressure, and engine temperature which is capable of discriminating between failed sender or wiring components, and an actual failure conditions.

F. Alternator Control Functions:

1. The generator set shall include an automatic digital voltage regulation system that is matched and prototype tested by the engine manufacturer with the governing system provided. It shall be immune from misoperation due to load-induced voltage waveform distortion and provide a pulse width modulated output to the alternator exciter. The voltage regulation system shall be equipped with three-phase sensing and shall control buildup of AC generator voltage to provide a linear rise and limit overshoot. The system shall include a torque-matching characteristic, which shall reduce output voltage in proportion to frequency below an adjustable frequency threshold. Torque matching characteristic shall be adjustable for roll-off frequency and rate, and be capable of being curve-matched to the engine torque curve with adjustments in the field. The voltage regulator shall include adjustments for gain, damping, and frequency roll-off. Adjustments shall be broad range, and made via digital raise-lower switches, with an alphanumeric LED readout to indicate setting level.
2. Controls shall be provided to monitor the output current of the generator set and initiate an alarm (over current warning) when load current exceeds 110% of the rated current of the generator set on any phase for more than 60 seconds. The controls shall shut down and lock out the generator set when output current level approaches the thermal damage point of the alternator (over current shutdown). The protective functions provided shall be in compliance to the requirements of NFPA70 article 445. The protection for this function shall be 3rd party certified to very performance.
3. Controls shall be provided to individually monitor all three phases of the output current for short circuit conditions. The control/protection system shall monitor the current level and voltage. The controls shall shut down and lock out the generator set when output current level approaches the thermal damage point of the alternator (short circuit shutdown). The

protective functions provided shall be in compliance to the requirements of NFPA70 article 445. The protection for this function shall be 3rd party certified to very performance.

4. Controls shall be provided to monitor the KW load on the generator set, and initiate an alarm condition (over load) when total load on the generator set exceeds the generator set rating for in excess of 5 seconds. Controls shall include a load shed control, to operate a set of dry contacts (for use in shedding customer load devices) when the generator set is overloaded.
5. A line to neutral sensing AC over/under voltage monitoring system that responds only to true RMS voltage conditions shall be provided. The system shall initiate shutdown of the generator set when alternator output voltage exceeds 110% of the operator-set voltage level for more than 10 seconds, or with no intentional delay when voltage exceeds 130%. Under voltage shutdown shall occur when the output voltage of the alternator is less than 85% for more than 10 seconds.

G. Other Control Functions:
1. A battery monitoring system shall be provided which initiates alarms when the DC control and starting voltage is less than 25VDC or more than 32 VDC. During engine cranking (starter engaged), the low voltage limit shall be disabled, and DC voltage shall be monitored as load is applied to the battery, to detect impending battery failure or deteriorated battery condition.

H. Control Interfaces for Remote Monitoring:
1. The control system shall provide three programmable output relays. These relay outputs shall be configurable for any alarm, shutdown, or status condition monitored by the control. The relays shall be configured to indicate: (1) generator set operating at rated voltage and frequency, (2) common warning, (3) common shutdown.
2. A fused 10 amp switched 24VDC power supply circuit shall be provided for customer use. DC power shall be available from this circuit whenever the generator set is running.
3. A fused 10 amp 24VDC power supply circuit shall be provided for customer use. DC power shall be available from this circuit at all times from the engine starting/control batteries.

2.05 GENERATOR REMOTE ANNUNCIATOR AND EMERGENCY STOP CONTROL AND MAIN LINE CIRCUIT BREAKER

C. Provide a remote alarm horn/light with silence push button located exterior to generator as directed in field. Electrical Contractor shall wire same as required.

B. Emergency Stop Control Switch: Break glass type. Locate inside building adjacent to the remote alarm.

C. The generator set shall be provided with a mounted main line circuit breaker, sized to carry the rated output current of the generator set. The circuit breaker shall incorporate an electronic trip unit that operates to protect the alternator.

2.06 WIRING

A. Conduit: Galvanized steel, flexible heat resistant "Sealtite" conduit.

B. Terminal Strip: Terminate wiring at identified terminals on terminal strip in NEMA 12 junction box.

C. Conductors: Stranded copper with THHN insulation.

2.07 EXHAUST SYSTEM

A. Provide a critical grade muffler, flexible exhaust connector, flanges (if required), exhaust extension and rain cap. Muffler to be mounted internally to weather protective enclosure.

B. Provide an exhaust condensation trap with manual drain valve to trap and drain off exhaust condensation. Provide drain line to drip pan.

C. Exhaust system weight should be adequately supported by structure or other dedicated supports. It shall not be supported by the engine manifold or turbocharger.

PART 3 - EXECUTION

3.01 SEQUENCE OF OPERATION

A. Generator set shall start and come on-line within 10 seconds maximum on receipt of a start signal from remote equipment.

B. The generator set shall complete a time delay start period as programmed into the control.

C. The generator set control shall initiate the starting sequence for the generator set. The starting sequence shall include the following functions:

1. The control system shall verify that the engine is rotating when the starter is signaled to operate. If the engine does not rotate after two attempts, the control system shall shut down and lock out the generator set, and indicate "fail to crank" shutdown.
2. The engine shall fire and accelerate as quickly as practical to start disconnect speed. If the engine does not start, it shall complete a cycle cranking process as described elsewhere in this specification. If the engine has not started by the completion of the cycle cranking sequence, it shall be shut down and locked out, and the control system shall indicate "fail to start".
3. The engine shall accelerate to rated speed and the alternator to rated voltage. Excitation shall be disabled until the engine has exceeded programmed idle speed, and regulated to prevent over voltage

conditions and oscillation as the engine accelerates and the alternator builds to rated voltage.

D. On reaching rated speed and voltage, the generator set shall operate as dictated by the control system in isochronous, synchronize, load share, load demand, or load govern state.

E. When all start signals have been removed from the generator set, it shall complete a time delay stop sequence. The duration of the time delay stop period shall be adjustable by the operator.

F. On completion of the time delay stop period, the generator set control shall switch off the excitation system and shall shut down.
   1. Any start signal received after the time stop sequence has begun shall immediately terminate the stopping sequence and return the generator set to isochronous operation.

3.02 INSTALLATION

A. Equipment shall be installed by the contractor in accordance with final submittals and contract documents. Installation shall comply with applicable state and local codes as required by the authority having jurisdiction. Install equipment in accordance with manufacturer's instructions. This contractor is responsible for complete installation and must coordinate all aspects of the installation. Mechanical Contractor shall install final natural gas piping and exhaust piping.

B. Installation of equipment shall include furnishing and installing all interconnecting wiring between all major equipment provided for the on-site power system. The contractor shall also perform interconnecting wiring between equipment sections (when required), under the supervision of the equipment supplier.

C. Equipment shall be installed on concrete housekeeping pads. Equipment shall be set or permanently fastened to the pad in accordance with manufacturer's instructions and seismic requirements of the site.

D. Equipment shall be initially started and operated by representatives of the manufacturer.

E. All equipment shall be physically inspected for damage.

F. The Electrical Contractor shall disconnect and remove existing unit. Mechanical Contractor shall disconnect and remove existing water piping, natural gas piping and exhaust piping.

3.03 ON-SITE ACCEPTANCE TEST

A. The complete installation shall be tested for compliance with the specification following completion of all site work. Testing shall be conducted by representatives of the

manufacturer, with required fuel supplied by Contractor. The Engineer shall be notified in advance and shall have the option to witness the tests.

B. Installation acceptance tests to be conducted on-site shall include a "cold start" test, a two hour full load test, and a one step rated load pickup test in accordance with NFPA 110. Provide a resistive load bank and make temporary connections for full load test, if necessary.

C. Perform a power failure test on the entire installed system. Coordinate timing and obtain approval for start of test with site personnel.

D. Verify proper operation of all engine shutdown features.

3.04 TRAINING

A. The equipment supplier shall provide training for the facility operating personnel covering operation and maintenance of the equipment provided. The training program shall be up to 4 hours (unless Owner allows for less time) in duration and the class size shall be limited to 5 persons. Training date shall be coordinated with the facility owner.

3.05 SERVICE AND SUPPORT

A. The manufacturer of the generator set shall maintain service parts inventory at a central location which is accessible to the service location 24 hours per day, 365 days per year.

B. The generator set shall be serviced by a local service organization that is trained and factory certified in generator set service. The supplier shall maintain an inventory of critical replacement parts at the local service organization, and in service vehicles. The service organization shall be on call 24 hours per day, 365 days per year.

3.06 WARRANTY

A. The generator set and associated equipment shall be warranted for a period of not less than 5 years from the date of commissioning against defects in materials and workmanship.

B. The warranty shall be comprehensive. No deductibles shall be allowed for travel time, service hours, repair parts cost, etc.

3.07 SPARE PARTS (IF APPLICABLE TO UNIT)

A. Provide two spare air filters.

B. Provide one belt of each type.

C. Provide one spare oil filter.

D. Provide one gallon of spare engine lubricating oil.

E. Provide two spare fuses of each type used.

F. Provide one spare thermostat.

G. Deliver spare parts to Owner.

END OF SECTION

Section 26 36 23 - Automatic Transfer Switches

PART 1 - GENERAL

1.01 DESCRIPTION

A. Work Includes:
1. Furnish all labor, materials, tools, equipment, and services for automatic transfer switches as indicated in accord with provisions of Contract Documents.
2. Completely coordinate with work of all other trades.
3. Although such work is not specifically indicated, furnish and install all supplementary or miscellaneous items, appurtenances and devices incidental to or necessary for a sound, secure and complete installation.

1.02 SUBMITTALS (General Conditions)

A. Shop Drawings:
1. Identify automatic transfer switches by alphanumeric designation with switch rating, withstand rating, etc., marked.

B. Project Data:
1. Operating and maintenance data.
2. Owner instruction reports.

1.03 WARRANTY

A. Provide a five (5) year comprehensive warranty.

PART 2 - PRODUCTS

2.01 MATERIALS

A. Acceptable Manufacturers:
1. Automatic transfer switches:
   a. Base: Automatic Switch Co.; Russelectric, and Zenith.
2. Other manufacturers desiring approval comply with Instruction To Bidders.

B. Automatic Transfer Switches - General: Electrically operated mechanically held 120/208 volt, 3 phase AC, minimum 40 amp, air-break type, with supervisory relays on each phase of normal source and supervisory frequency/voltage relay for emergency source.
1. UL 1008 listed for paragraph 30.3 emergency service.

2. Adjust normal source supervisory relays to transfer load if voltage on any phase drops below 70 percent of normal and to restore load to normal source when normal source voltage on all phases is 90 percent or more.
3. Obtain voltage for main contact operating solenoid from source to which load is being transferred.
4. 3 or 4-wire as indicated.
5. Make mechanical design of switch such that it will positively open alternate source before connection is made to normal source.
6. Design mechanical interlock so it cannot be readily disabled, disconnected, improperly adjusted, removed or otherwise made inoperative.
7. Provide provision for visual inspection of switch blades and contacts.
8. Silver-surface main contacts and protect by arcing contacts.
9. Make all contacts and coils readily accessible for replacement from front of panel without major disassembly.
10. Provide red and green indicating lights, identification nameplates, and test switch on front to simulate normal power failure at switch. Indicating lights shall be LED.
11. Rate each individual switch as indicated.
12. Provide written approval of Chief Engineer of power utility.
13. Provide engine starting contacts, remote automatic transfer switch control circuits and all other auxiliary contacts and accessory devices for functions to be performed.
14. Provide with adjustable time delay on retransfer to normal, motor driven type 2 to 30 minutes, to avoid erratic operation caused by short time reestablishment of normal source.
15. NEMA 1 enclosure.
16. Provide RUN-OFF-AUTO generator control. A visual/ audible signal shall annunciate at generator annunciators when switch is not in AUTO position.

C. Automatic transfer switches serving existing Emergency Panel:
1. Provide time delay on engine start, field adjustable from 0 to 10 SEC, and factory set at 1 SEC.
2. In accord with NFPA 99, transfer to be made to generator automatically within 10 SEC maximum.

D. Automatic transfer switches shall be able to withstand the Existing Available Short-Circuit Capacity.

PART 3 - EXECUTION

3.01 INSTALLATION

A. Locate switch on wall adjacent to existing EM panel.

B. Connect as indicated on riser diagram or as necessary and required for a complete, operating system. Include all control wiring line or low voltage. Comply with manufacturer's recommendations.

C. Electrical Contractor shall remove existing transfer switch.

D. Electrical Contractor shall provide new feeder from unit generator to transfer switch to existing panel. Minimum 4#60 - 10G - 1 ¼" C.

E. Electrical Contractor shall provide wiring to block heater from existing EM panel.

F. Electrical Contractor shall wire from exhaust fan EF-1 to existing EM panel and wire intake dampers to operate when generator runs. Wire dampers to existing EM panel on separate circuits.

G. Provide required circuit breakers at EM panel for all new loads. Update panel directory.

END OF SECTION

H:\DWGS\2013\13-1103.00 - MLK Community Ctr-HVAC Replacement E\Drawings\13-1103.00 E100.dwg

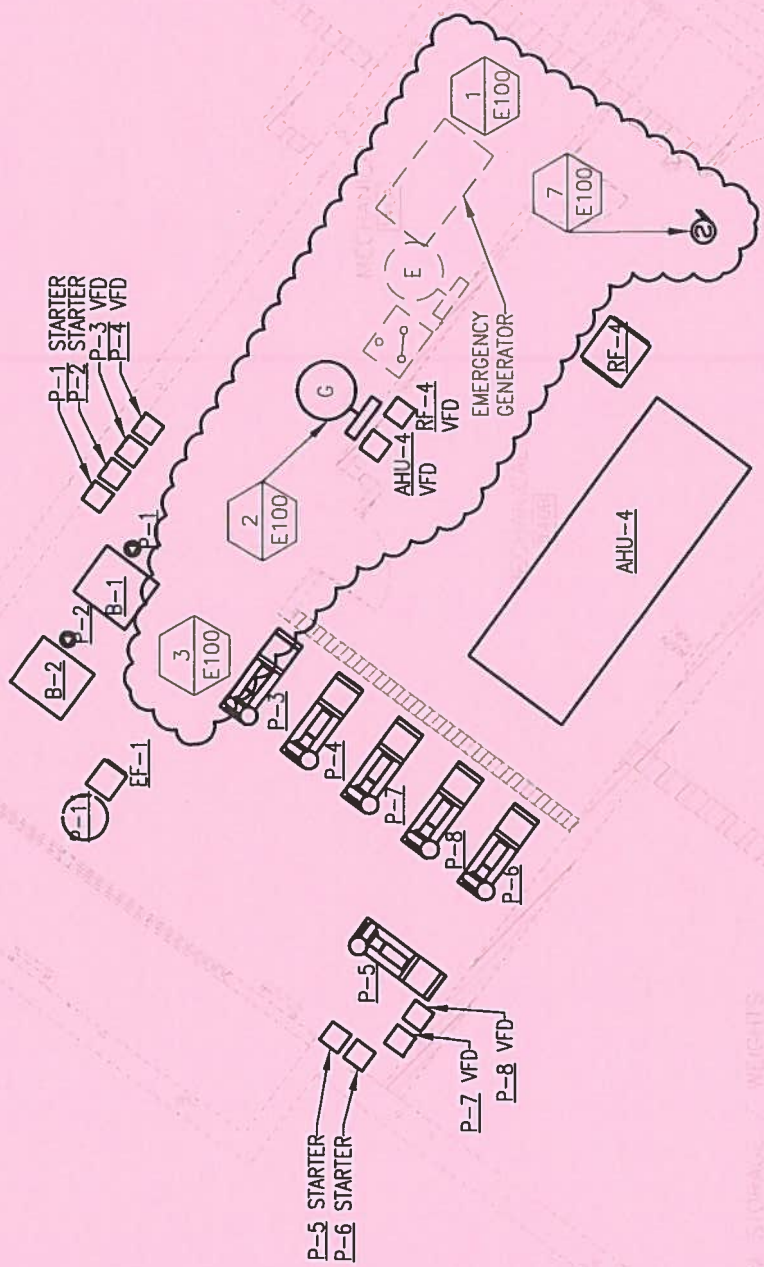

1 PARTIAL LOWER LEVEL POWER PLAN
1/8" = 1'-0"

ADDENDUM 02

MILWAUKEE COUNTY DEPARTMENT OF ADMINISTRATIVE SERVICES
CITY CAMPUS 2711 W. WELLS ST - 2ND FLOOR MILWAUKEE, WI 53256

Milwaukee County Department of Parks, Recreation, & Culture
HVAC System Replacement for Martin Luther King Community Center
1531 West Vliet Street, Milwaukee, Wisconsin 53205

PROJECT # P202-13010
SITE NO: 773
BLDG NO: 2110
DATE: 11/26/2013
E-1

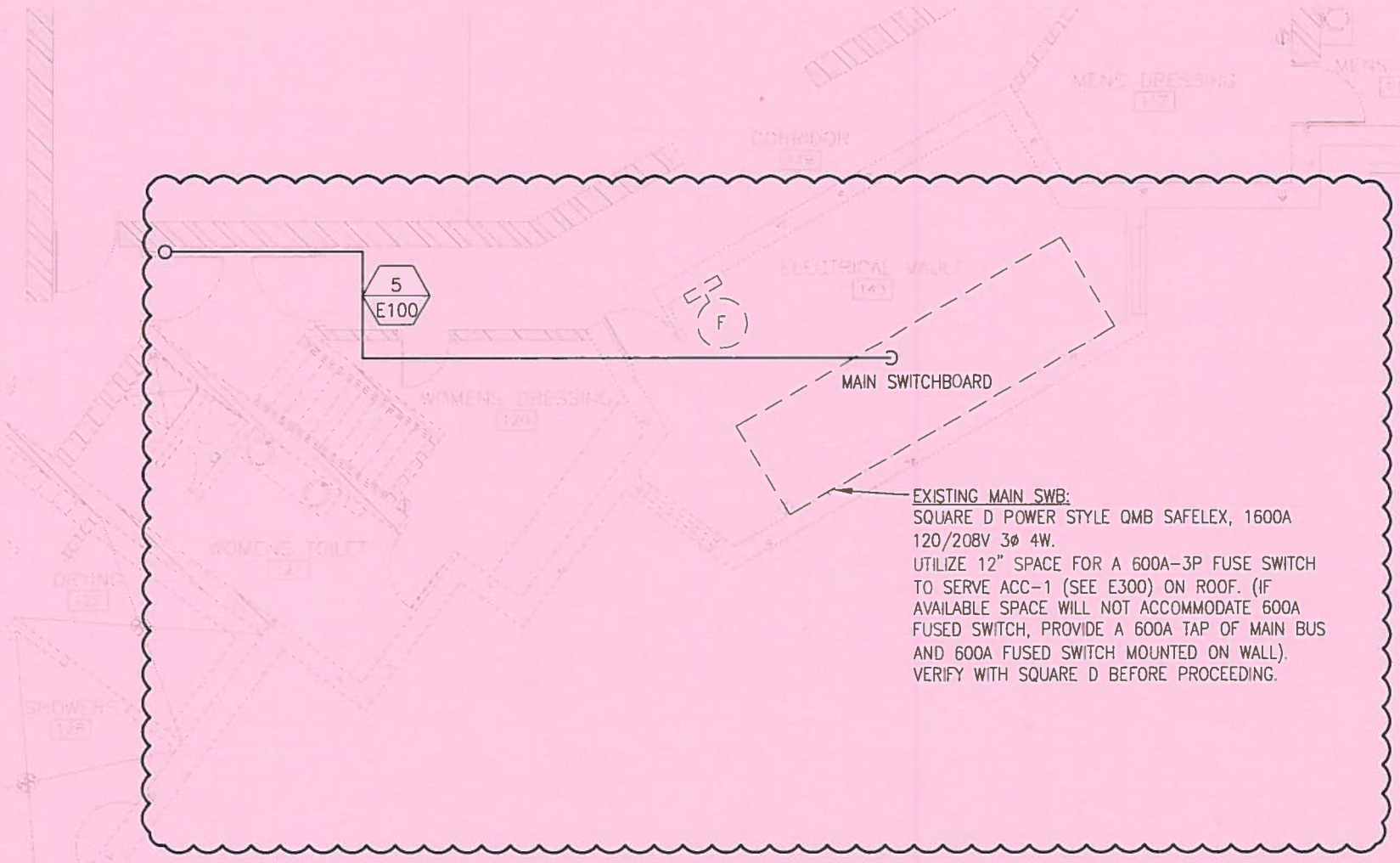

1 **PARTIAL LOWER LEVEL POWER PLAN**
1/8" = 1' - 0"

ADDENDUM 02

MILWAUKEE COUNTY DEPARTMENT OF ADMINISTRATIVE SERVICES
CITY CAMPUS 2711 W. WELLS ST - 2ND FLOOR MILWAUKEE, WI 53208

Milwaukee County Department of Parks, Recreation, & Culture
HVAC System Replacement for Martin Luther King Community Center
1531 West Vliet Street, Milwaukee, Wisconsin 53205

PROJECT # P202-13610
SITE NO: 773
BLDG NO: 2110

DATE: 11/26/2013

E-2

H:\DWGS\2013\13-1103.00 - MLK Community Ctr-HVAC Replacement\E\Drawings\13-1103.00 E100.dwg

PLAN NOTES:

#
E100

1. -REMOVE EXISTING GENERATOR, TRANSFER SWITCH AND INTERCONNECTING FEEDERS FROM GENERATOR TO TRANSFER SWITCH AND EMERGENCY PANEL.
-DISCONNECT NATURAL GAS PIPING, CITY WATER PIPING (IN & OUT) AND EXHAUST. REMOVE CONCRETE BLOCK BASE. REMOVE EXISTING BATTERIES AND BATTERY CHARGER.
-NEW GENERATOR SHALL BE CITY WATER COOLED, NATURAL GAS, 120/208 3ø BY KOHLER, GENERAC OR EQUAL. TRANSFER SWITCH SHALL BE 40A-3P 208 BY SAME MANUFACTURER AS GENERATOR.
-PROVIDE 6" CONCRETE BASE, FULL LENGTH AND WIDTH OF UNIT. NEW UNIT SHALL INCLUDE GAS PRESSURE REGULATOR, BLOCK HEATER, INSULATED MUFFLER, BATTERIES, BATTERY RACK, AND BATTERY CHARGER.
-SEE MECHANICAL DRAWINGS FOR GAS PIPING AND EXHAUST PIPE INSTALLATION DETAILS. CONFORM TO MANUFACTURER REQUIREMENTS.
-PROVIDE 110V CIRCUIT FROM EXISTING PANEL EM TO SERVE NEW EF-1. PROVIDE 20A C/S. UPDATE SCHEDULE.
-EXTEND 4#6-1 1/4"C #10G FROM EXISTING EM PANEL TO ATS THEN TO GEN SET. EXTEND START CIRCUIT (3#10) FROM ATS TO GEN SET.
-CONDUCT TESTS ON GEN SET WITH BUILDING LOAD. TEST SHALL BE WITNESSED BY ENGINEER AND COUNTY STAFF UPON FINAL COMPLETION.

2. NEW PANEL G: SQUARE D NQOB WITH BOLTED CIRCUIT BREAKERS. 200A 3ø 4W BUS. 4-60A-3P, 2-20A-3P, 2-30A-3P, 6-20A-1P, 12 SPACES. TAP EXISTING FEEDER SERVING EXISTING PANEL. PROVIDE 200A FUSED SWITCH. EXTEND 4-3/0 #6G 2 1/2" GROUND FROM TAP THRU DISCONNECT SWITCH TO PANEL G.

3. REWIRE EXISTING LIGHTING IN NEW MECH ROOM TO PROVIDE 3 WAY SWITCHING AS IN EXISTING. ADD (2) 1X4 2 LAMP STRIPS WHERE DIRECTED IN FIELD.

4. DISCONNECT EXISTING CIRCUIT AT EACH CUH. RECONNECT CIRCUIT TO NEW UNIT. NOTE: THE NEW CUH TERMINATION JUNCTION BOX MAY BE ON OPPOSITE END OF EXISTING UNITS. VERIFY IN THE FIELD TO PROPERLY EXTEND CIRCUIT.

5. PROPOSED ROUTE OF FEEDER TO ROOF MOUTED ACC-1 AND CONTROL CONDUITS. EC MAY ALTER FINAL ROUTE WITH APPROVAL OF ENGINEER AND COUNTY.

6. EXISTING AHU, RF AND PUMP TO BE REMOVED, SEE MECHANICAL DRAWINGS. REMOVE EXISTING AB STARTERS SERVING EXISTING AHU AND EF. REUSE EXISTING 3ø CIRCUITS TO FEED NEW AHU-5, RF-5 AND 120V 1ø P-10 CIRCUIT.

7. WIRE DUCT SMOKE DETECTOR TO EXISTING SIMPLEX 4010 FIRE ALARM SYSTEM. CONSULT WITH SIMPLEX TO INTEGRATE FUNCTION. SEE SMOKE DUCT DETAIL. SEE MECHANICAL SEQUENCE OF OPERATIONS SPECIFICATION FOR SHUT DOWN REQUIREMENTS.

ADDENDUM 02

H:\DWGS\2013\13-1103.00 - MLK Community Ctr-HVAC Replacement E\Drawings\13-1103.00 E200.dwg

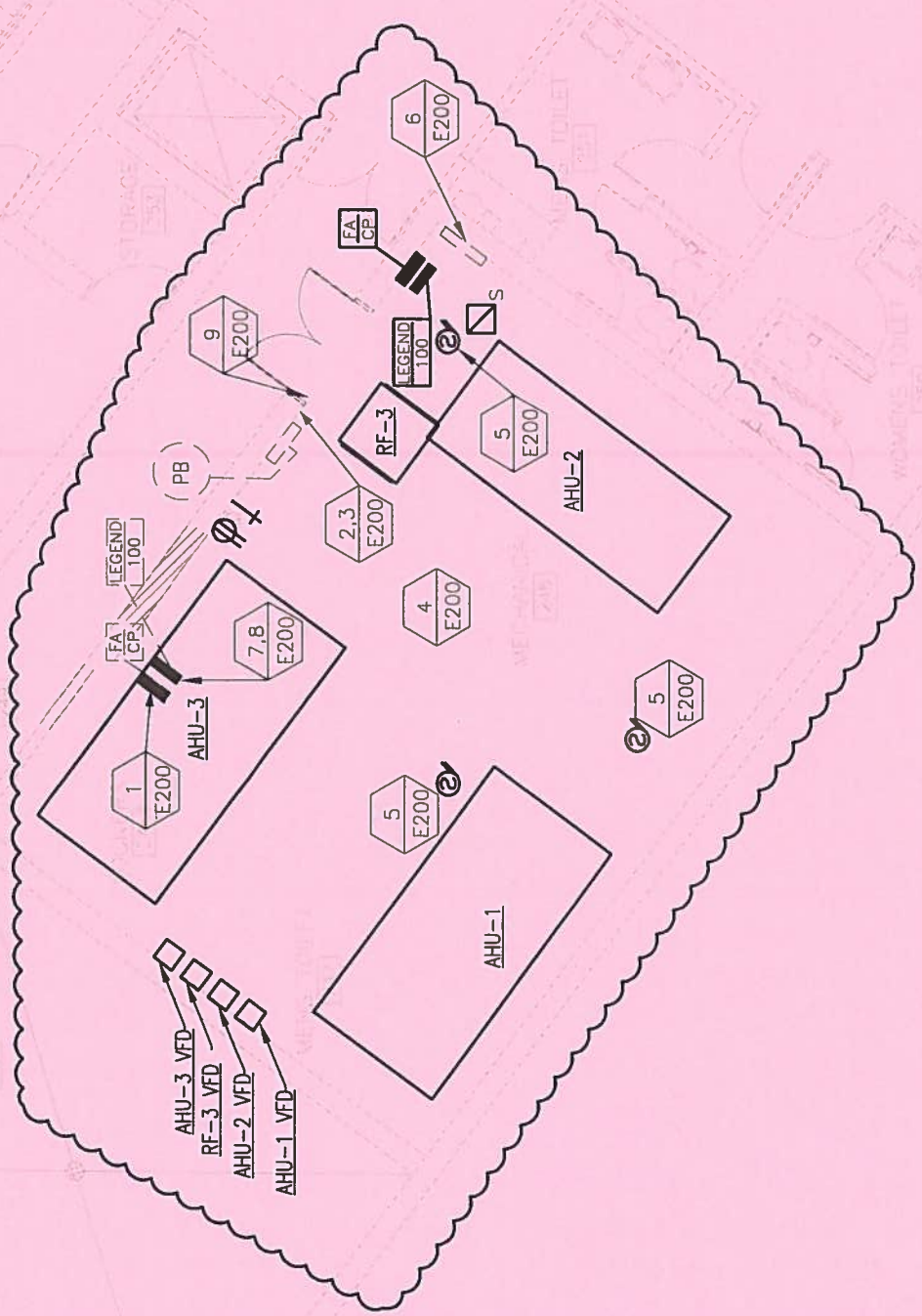

1 PARTIAL GROUND FLOOR POWER PLAN
1/8" = 1'-0"

ADDENDUM 02

MILWAUKEE COUNTY DEPARTMENT OF ADMINISTRATIVE SERVICES
CITY CAMPUS 2711 W. WELLS ST - 2ND FLOOR MILWAUKEE, WI 53208

Milwaukee County Department of Parks, Recreation, & Culture
HVAC System Replacement for Martin Luther King Community Center
1531 West Vliet Street, Milwaukee, Wisconsin 53205

PROJECT # P282-13818
SITE NO: 773
BLDG NO: 2110

DATE: 11/26/2013

E-4

PLAN NOTES:

E200

1. EXISTING SIMPLEX FIRE ALARM CONTROL PANEL SHALL BE RELOCATED DUE TO EXISTING WALL BEING DEMOLISHED. FOR BIDDING PURPOSE LOCATE PANEL ON THE NORTHEAST CORNER OF THIS ROOM. EXTEND EXISTING ALARM, SIGNAL AND POWER CIRCUIT AS NEEDED. SEE NOTE 8. CONDUCT FIRE ALARM TEST OF SYSTEM UPON COMPLETION. ENGINEER AND COUNTY SHALL WITNESS TEST.

2. PROVIDE NEW LIGHTING CONTROLS AND RECEPTACLE AT THIS DOOR. EXTEND CIRCUIT AS NEEDED TO LIGHTS AND RECEPTACLE.

3. RELOCATE EXISTING FIRE ALARM STATION ADJACENT TO NEW DOOR LOCATION.

4. ADD (3) 2 LAMP STRIP LIGHTS IN SPACE AS DIRECTED IN FIELD. WIRE TO EXISTING SWITCH CIRCUIT.

5. WIRE DUCT SMOKE DETECTOR TO EXISTING SIMPLEX 4010 FIRE ALARM SYSTEM. CONSULT WITH SIMPLEX TO INTEGRATE FUNCTION. SEE SMOKE DUCT DETAIL. SEE MECHANICAL SEQUENCE OF OPERATIONS SPECIFICATION FOR SHUT DOWN REQUIREMENTS.

6. EXISTING FEEDER IS SERVING PANEL PB. EXISTING FEEDER TO PANEL PB IS IN CONFLICT WITH NEW DOORS OF MECHANICAL ROOM. REROUTE EXISTING 400 AMP FEEDER DN TO FLOOR BELOW, ACROSS CEILING OF BOXING ROOM AND THEN UP TO PANEL PB. SEAL AROUND ALL CORE OPENINGS IN FLOOR. PROVIDE FEEDER TAP DEVICES IN EXISTING JUNCTION BOX. REMOVE EXISTING CONDUIT/FEEDER IN MECHANICAL ROOM.

7. REMOVE EXISTING WIRING TROUGH. REMOVE EXISTING FEEDER AND FEEDER TAPS TO NEW JUNCTION BOX IN CEILING. WIRING TROUGH MUST BE REMOVED FROM WALL. WALL WILL BE DEMOLISHED FROM FLOOR TO CEILING.

8. REMOVE AND RELOCATE EXISTING LEGEND 100 SYSTEM PANEL. SPLICE AND EXTEND ALL CABLES TO NEW PANEL LOCATION ABOVE RELOCATED EXISTING FIRE ALARM CONTROL PANEL. CONSULT WITH SUPPLIER/VENDOR OF SYSTEM TO CONFIRM PROPER PROCEDURE TO IDENTIFY, TAG AND EXTEND ALL LINES. ALL CABLES MUST BE PROPERLY SUPPORTED. CONFIRM WITH SIMPLEX REGARDING CABLES INTERCONNECTING BETWEEN FIRE ALARM CONTROL PANEL AND LEGEND 100. CONSULT WITH OWNER REGARDING LEGEND 100 SYSTEM PRIOR TO INITIATING ANY WORK AND DISTURBANCES TO THE SYSTEM. CONDUCT TEST ON SYSTEM UPON COMPLETION. ENGINEER AND COUNTY SHALL WITNESS TEST.

9. REMOVE (4) EX MS SERVING EF-1, 6, 7, 9. REMOVE (3) EX MAG SERVING S-1, 2, 3. PRV-MAG STARTER SHALL REMAIN.

10. DISCONNECT EXISTING CIRCUIT AT EACH CUH. RECONNECT CIRCUIT TO NEW UNIT. NOTE: THE NEW CUH TERMINATION JUNCTION BOX MAY BE ON OPPOSITE END OF EXISTING UNITS. VERIFY IN THE FIELD TO PROPERLY EXTEND CIRCUIT.

ADDENDUM 02

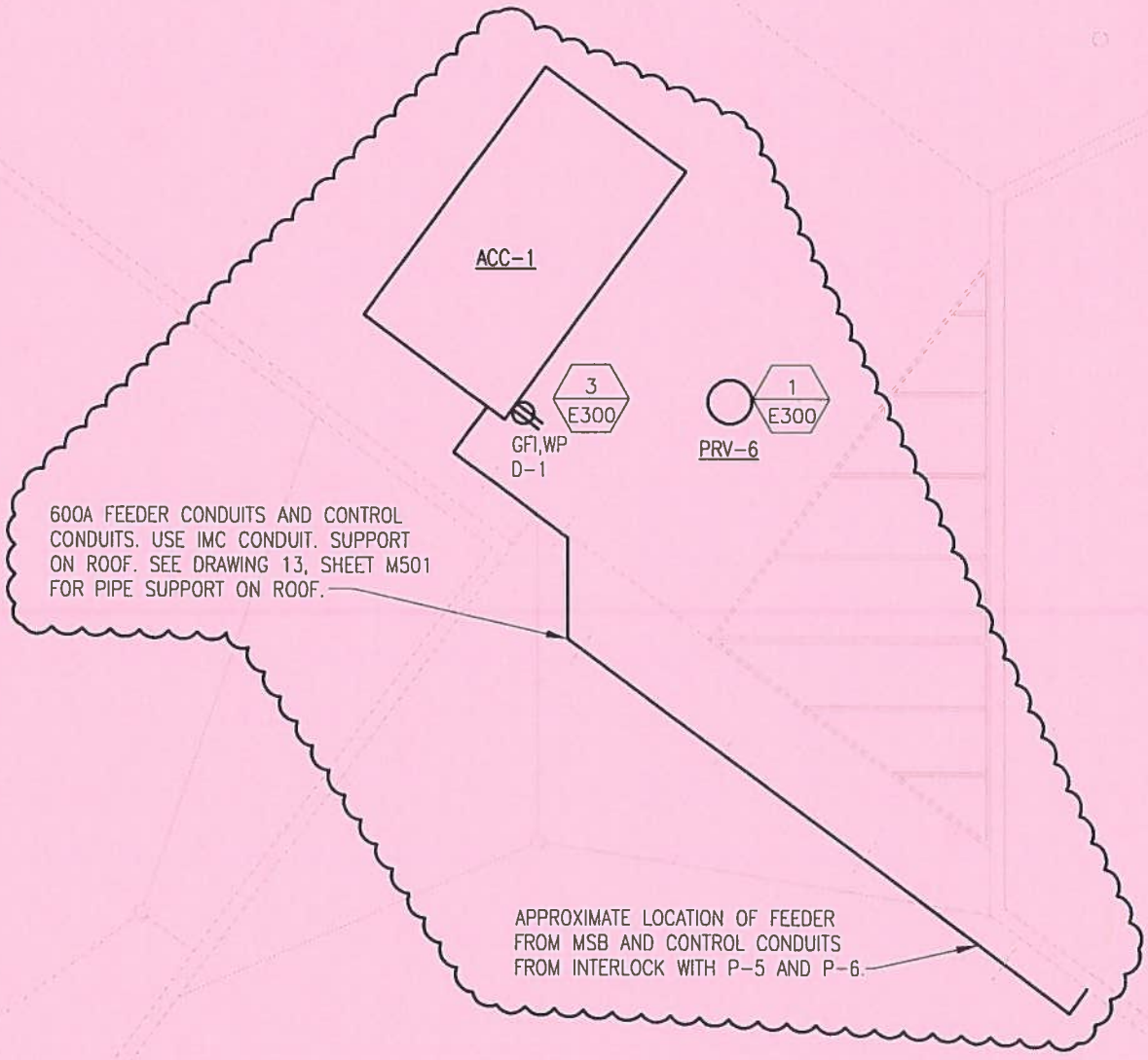

1 **PARTIAL ELECTRICAL ROOF PLAN**
1/8" = 1' - 0"

/ E300 PLAN NOTES:

1. DISCONNECT EXISTING WIRING TO PRVS. REUSE CIRCUIT WIRING TO SERVE NEW PRVS. REPLACE EXISTING STARTER WITH NEW AS SCHEDULED AT PRESENT LOCATION VERIFIED IN FIELD.

2. EXTEND 110V CIRCUIT TO SEVER WATERPROOF GFI RECEPTACLE FROM NEAREST EXISTING PANEL C OR PANEL D. PROVIDE 20A CIRCUIT BREAKER. UPDATE PANEL SCHEDULE. PROVIDE ROOF PENETRATION AND PROPER SEAL.

3. EXTEND 110V CIRCUIT FROM EXISTING PANEL D. PROVIDE 20A CIRCUIT BREAKER. UPDATE PANEL SCHEDULE.

ADDENDUM 02

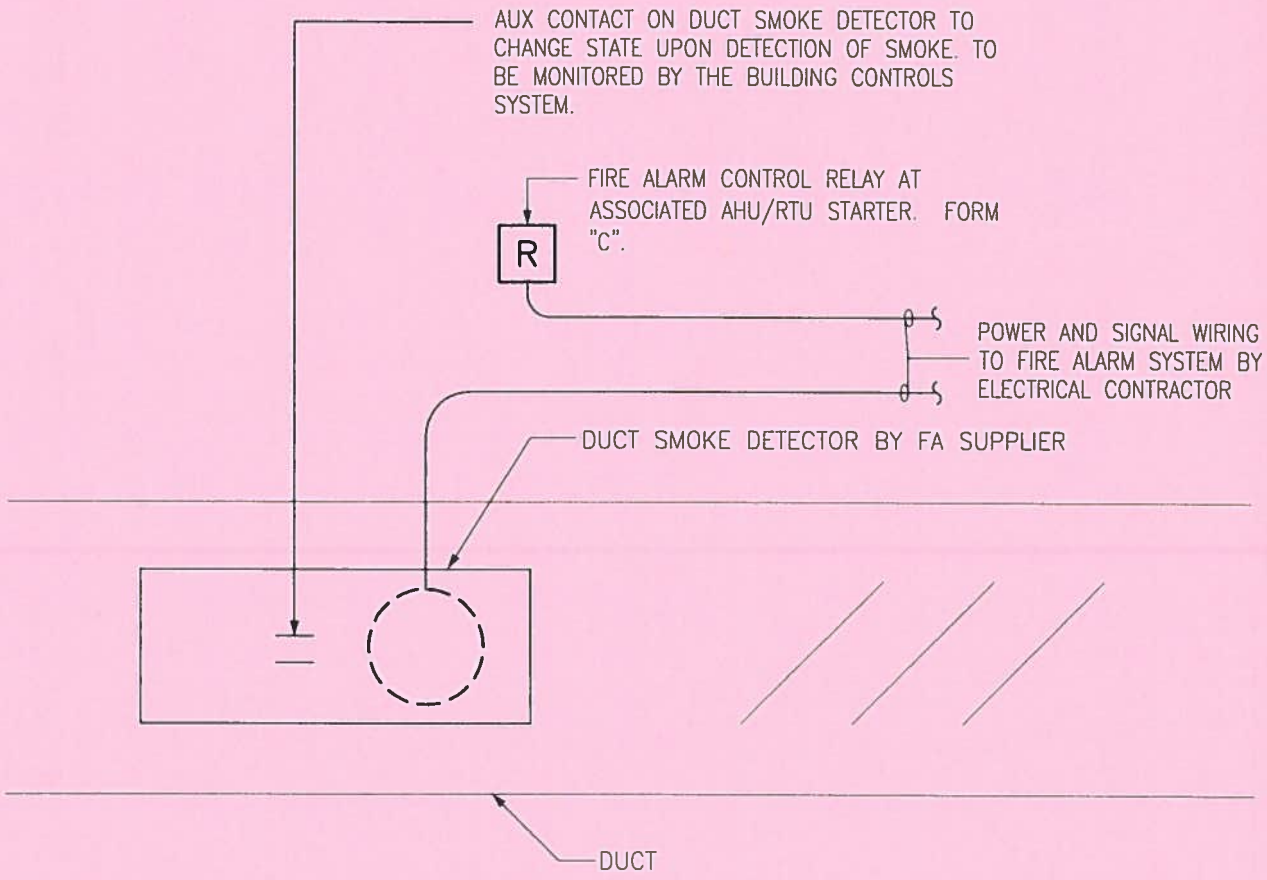

2
E400

DUCT SMOKE DETECTOR DETAIL

NO SCALE

NOTES:

1. PROVIDE CONTACTS AS SHOWN.
2. SEE SPECIFICATIONS FOR COORDINATION OF WORK WITH THE HVAC CONTRACTOR.
3. POWER SOURCE FOR DUCT SMOKE DETECTOR SHALL BE 24V DC.
4. ALL DEVICES SHALL BE ACCESSIBLE FOR NORMAL MAINTENANCE.
5. RELAY CONTACT FOR RTU/AHU CONTROL SHALL CHANGE STATE IMMEDIATELY UPON SMOKE DETECTION.
6. SEE MECHANICAL DRAWINGS FOR EXACT LOCATION OF DETECTOR.
7. FIRE ALARM RELAY AT STARTER SHALL BE RATED FOR COIL/CONTROL VOLTAGE OF THE STARTER.
8. CONTACT SIMPLEX FOR FIRE ALARM DEVICES AND MODIFICATIONS TO EXISTING FIRE ALARM CONTROL PANEL.

ADDENDUM 02

H:\DWGS\2013\13-1103.00 - MLK Community Ctr-HVAC Replacement\F DWGS\13-1103.00 S102.dwg

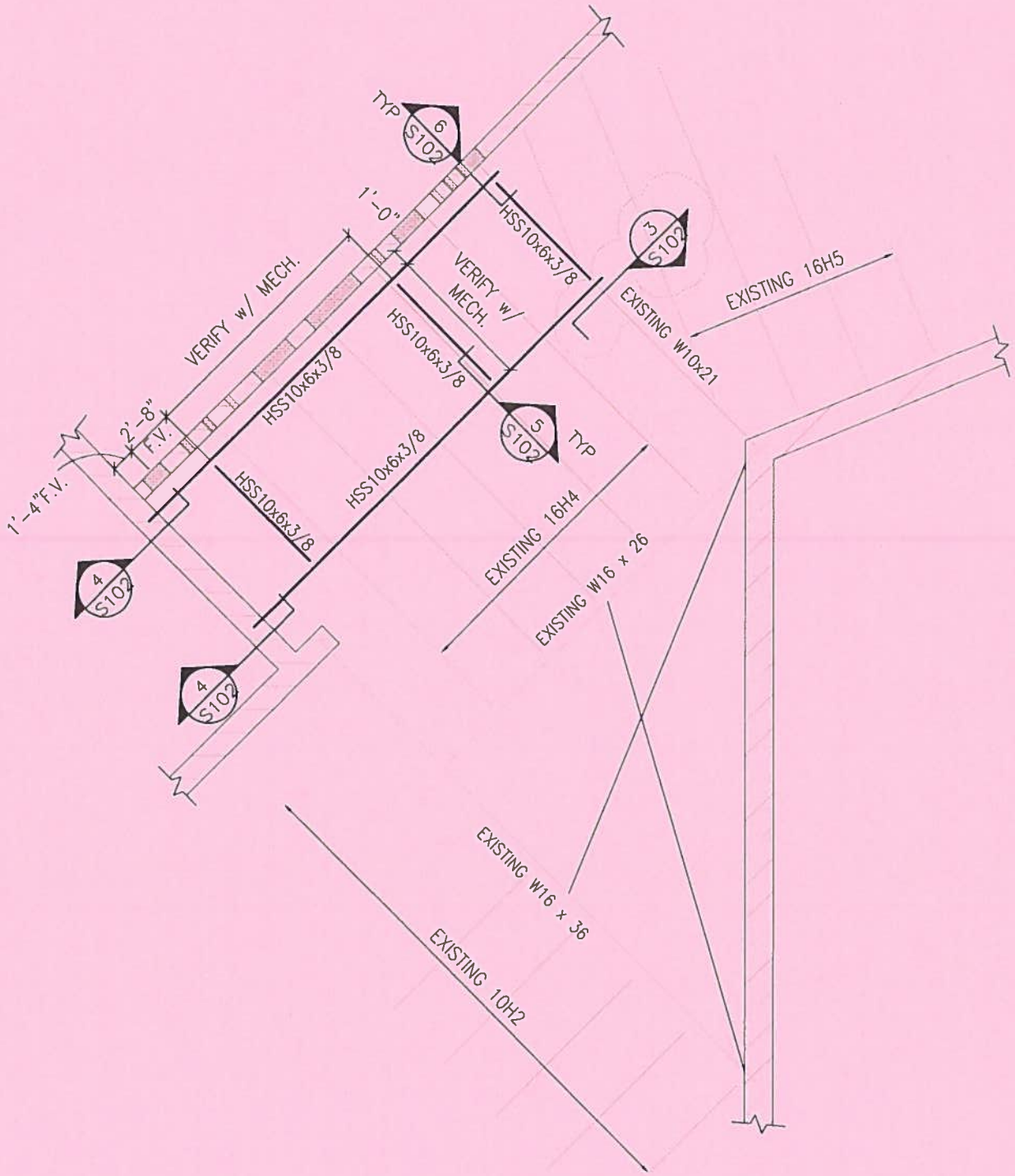

1 PARTIAL ROOF FRAMING PLAN

ADDENDUM 02

MILWAUKEE COUNTY DEPARTMENT OF ADMINISTRATIVE SERVICES
CITY CAMPUS 2711 W. WELLS ST - 2ND FLOOR MILWAUKEE, WI 53203

Milwaukee County Department of Parks, Recreation, & Culture
HVAC System Replacement for Martin Luther King Community Center
1531 West Vliet Street, Milwaukee, Wisconsin 53205

PROJECT # P202-13410
SITE NO: 773
BLDG NO: 2110

DATE: 11/26/2013

S-10

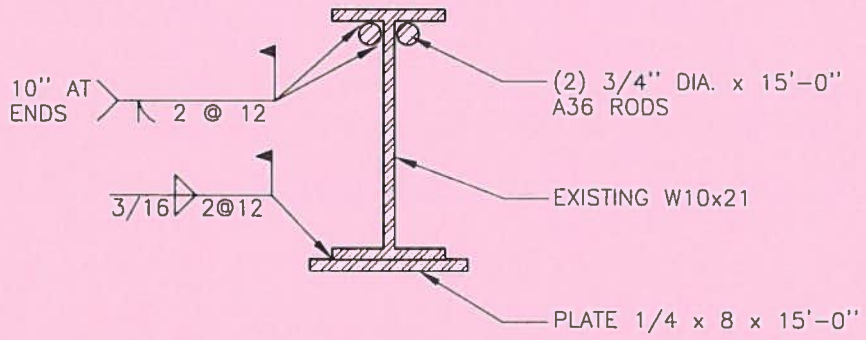

– CENTER REINFORCING ON BEAM

3 BEAM REINFORCEMENT DETAIL

ADDENDUM 02

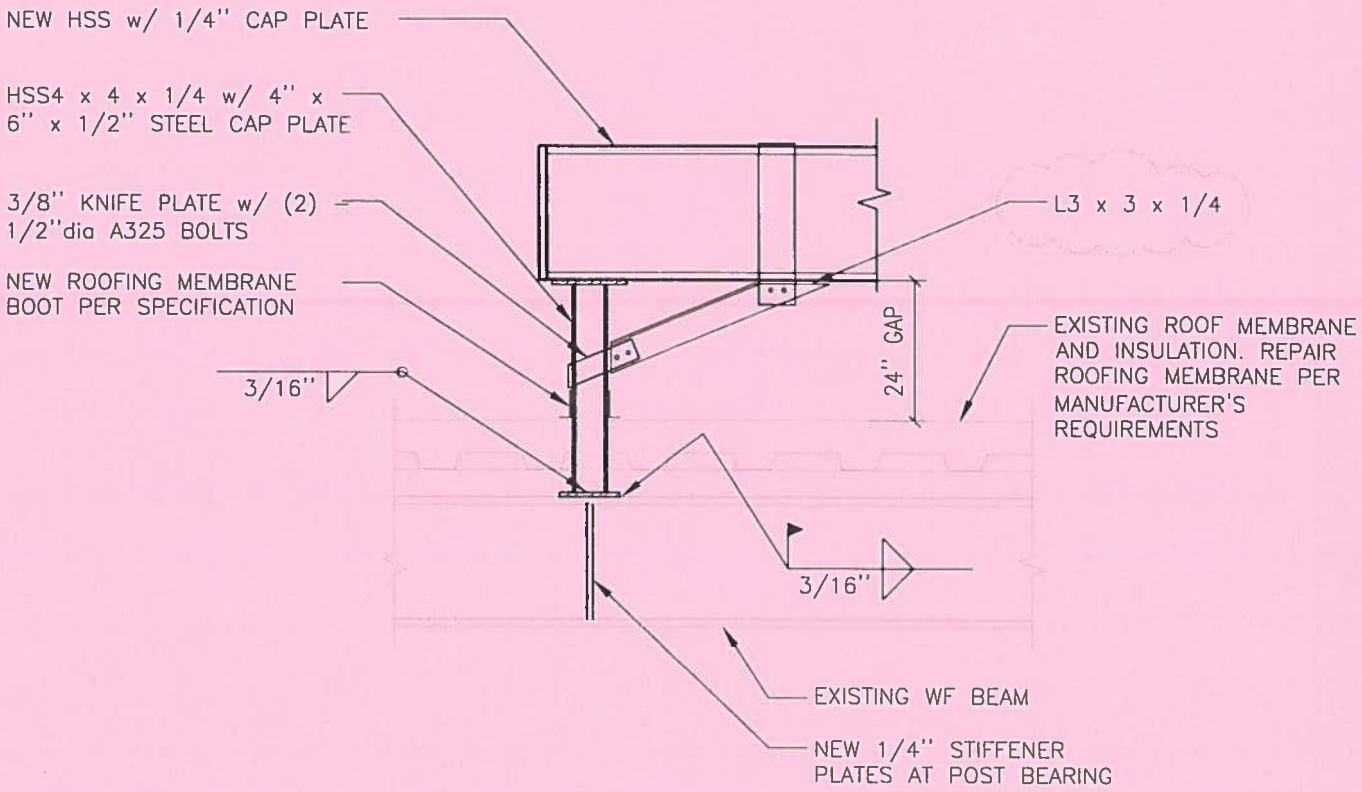

6 NEW UNIT SUPPORT BEARING DETAIL

ADDENDUM 02

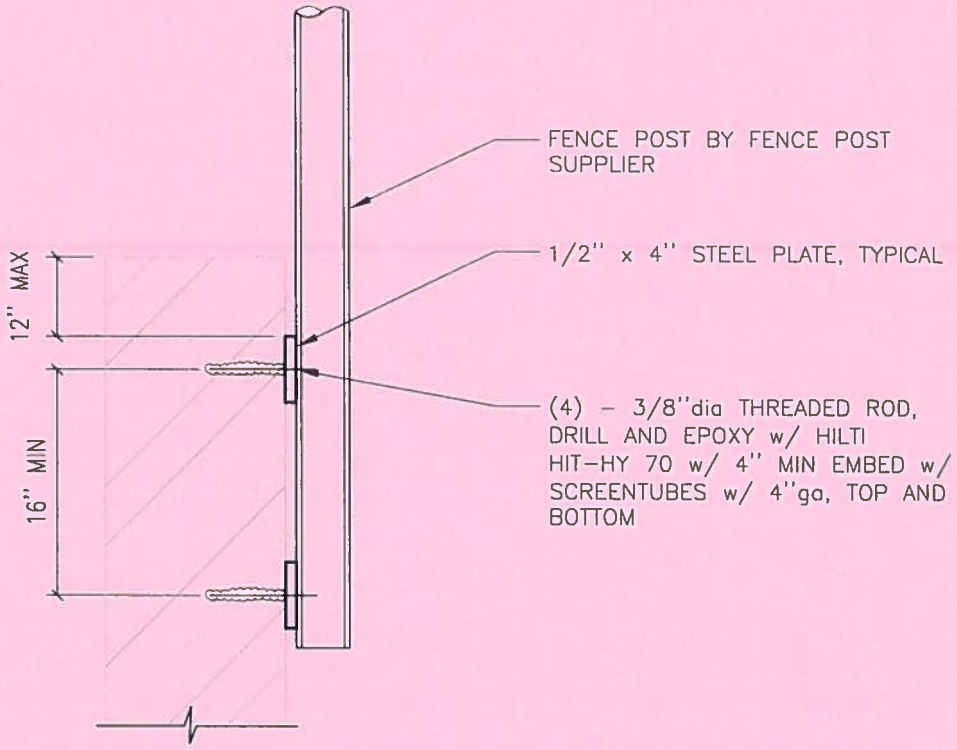

7 FENCE POST ATTACHMENT AT MASONRY

ADDENDUM 02

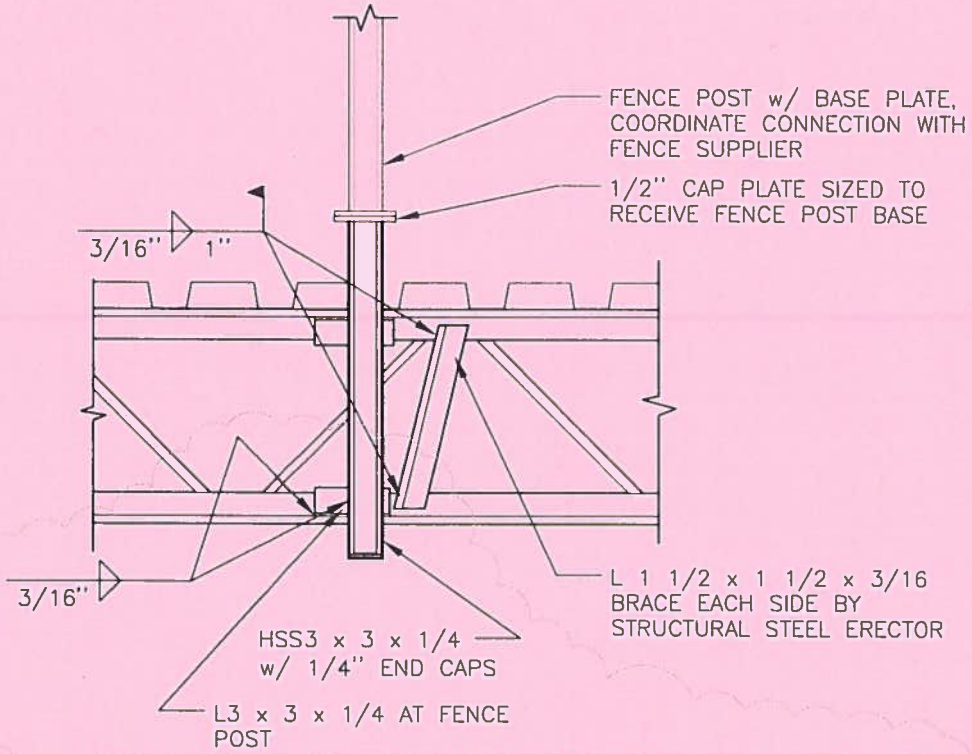

- ADD L1 1/2 x 1 1/2 x 3/16 CROSS BRACING ON BOTH SIDES OF JOIST AT FENCE POST SUPPORT
- IF JOIST CHORD THICKNESS IS LESS THAN 3/16" THAN USE AN EQUIVALENT 1/8" WELD.
- NO L BRACE REQ'D IF POST OCCURS WITHIN 3" OF JOIST PANEL POINT CENTERLINE.

8 JOIST REINF. AT FENCE POST

ADDENDUM 02