Hoyt Park Pedestrian Bridge Over The Menomonee River
Bridge Inspection and Repair Recommendations

Wauwatosa, WI

Prepared for:
Milwaukee County
2711 West Wells Street
Milwaukee, WI 53208

April 11, 2014

benesch
engineers · scientists · planners

TABLE OF CONTENTS

SECTION 1 **INTRODUCTION** 1

SECTION 2 **FINDINGS** 2
2.1 SUBSTRUCTURE 2
2.2 SUPERSTRUCTURE 4

SECTION 3 **REPAIR RECOMMENDATIONS** 4
3.1 SUBSTRUCTURE 4
3.2 SUPERSTRUCTURE 7
3.2.1 STEEL FLOORBEAM RESTORATION 7
3.2.2 TIMBER REPAIRS 7

SECTION 4 **FUTURE STEPS** 7

APPENDIX A - COST ESTIMATE

APPENDIX B – INSPECTION SKETCHES

APPENDIX C - PHOTOGRAPHS

APPENDIX D – BRIDGE PLANS

APPENDIX E - COMPUTATIONS

SECTION 1 INTRODUCTION

This report contains the results of a detailed inspection of the Hoyt Park pedestrian bridge over the Menomonee River in Wauwatosa, WI. The bridge is located approximately 1600 ft downstream of the Swan Boulevard Bridge over the Menomonee River, and about 500 ft east of the Hoyt Park Pool.

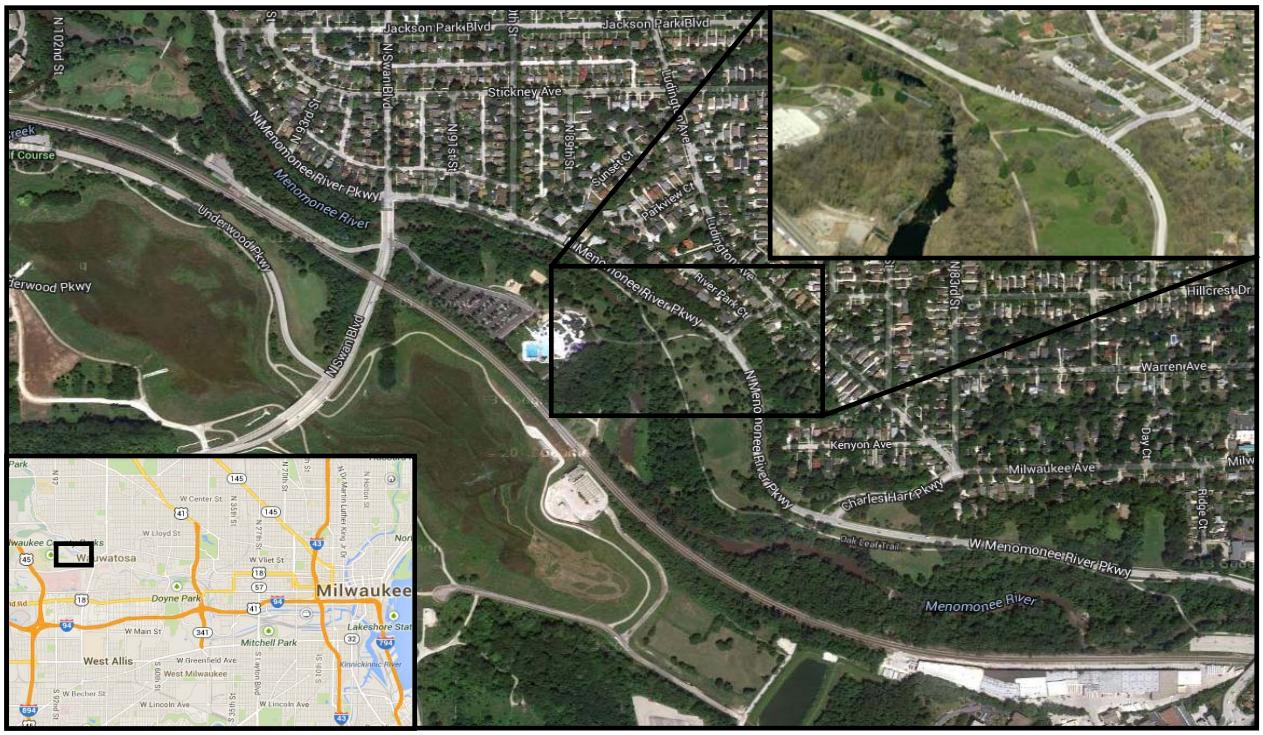

Figure 1. Project Location

The bridge was designed and constructed in 1937 by Milwaukee County and the US Department of the Interior National Park Service. It has a single span, 88 ft long between the centers of the stone towers, with stone wingwalls and the cable anchor located 27'-3" beyond the centers of the stone towers. The total structure length is approximately 143 ft. The two tall stone towers rise up to about 17 ft above the path elevation. The span is supported by two 1 ½" diameter steel cables draped through the towers on each side of the bridge and anchored at the ends of the tower wingwalls in an underground reinforced concrete anchor block. Steel hangar rods (3/4"diameter) support 4" deep steel floorbeams spaced at 9'-3" across the span. The bridge was designed using two longitudinal timber stringers spanning between floorbeams and supporting a timber plank deck. These stringers are spaced toward the outsides of the deck. At some point, another timber stringer was added along the centerline of the deck. This stringer is

a shallower section and is supported at the floorbeams with a short section of 4” x 4” tube steel.

Alfred Benesch and Company performed the inspection on 12/18/2013. The inspection was led by Bill Zippel, a licensed Professional Engineer and registered bridge inspection team leader in the State of Wisconsin. Mr. Zippel was assisted by Zachary Wollerman.

Detailed inspections were performed on the stone piers, steel cables, hangers, and floorbeams, and on the timber stringers, decking, and railings. A ladder was used to access the upper portions of the stone towers and the floorbeams under the deck. An underwater inspection was not included in the scope of this inspection.

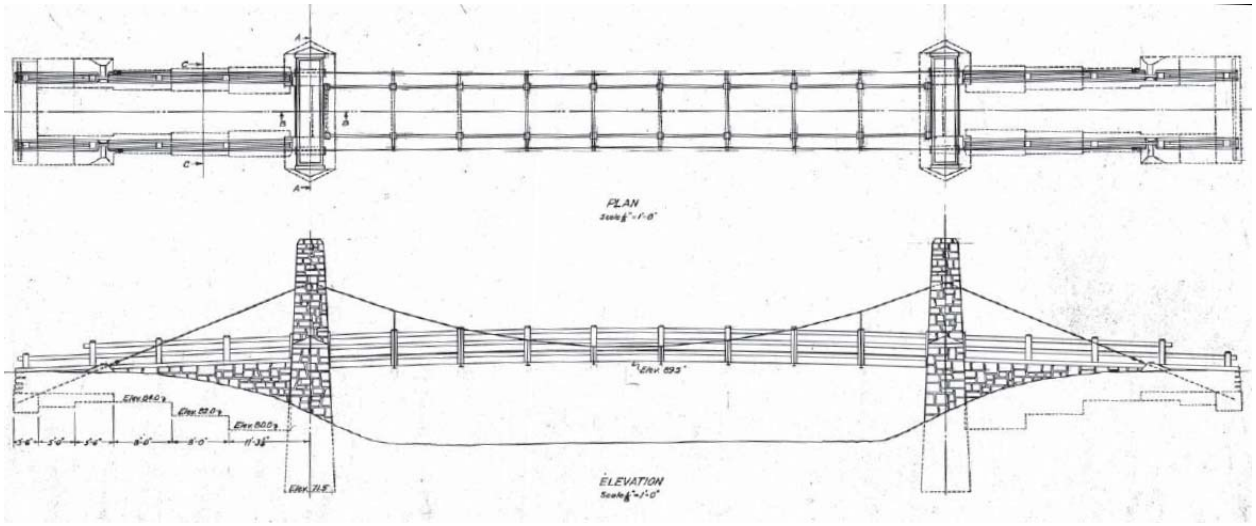

Figure 2. Bridge Plan and Elevation from 1937 Drawings

SECTION 2 FINDINGS

2.1 Substructure

The tower construction type consists of neat facing stone on the exposed surfaces of the towers and rubble stone on the interiors. The source of stone is likely the former Currie Park Quarry, which is now covered by the Currie Park golf course according to Milwaukee County Parks by Laurie Meunch Albano (2005). The towers are capped with four cap stones, approximately 12” by 3’-9” x 3’-7”, with a sealant applied between stones. There are two ledges on the sides of the towers. The upper ledge is 6” wide and uncapped. The lower ledge, which caps the buttressed edge of the tower below, is 12” wide and capped with a cut stone to drain.

The substructure investigation consisted of the inspection of the stone towers and wingwalls. Deterioration to the stone masonry is evident from open cracks throughout the masonry joints, cracks in many of the facing stones, and complete deterioration of some of the facing stones. The deepest point of deterioration was sounded with a chipping hammer, and it was determined that the deterioration is limited to only the facing stones and deterioration to the rubble masonry work is not directly evident along the vertical faces of the tower.

The east and west tower legs are connected at the top by a masonry header wall supported by a shallow arch shaped lintel. The arch rings consist of a keystone with 5 arch stones on both sides of the keystone. Some of the arch ring stones are badly deteriorated. At the West Pier, three of the ten arch ring stones are cracked and deteriorated and there is damage at the bottom of the keystone. Portions of these stones have fallen out. At the East Pier, five of the ten arch ring stones are damaged, as well as the keystone. The cracking and deterioration is not limited to the edges, and it extends through the arch stones from the east face to the west face. This damage appears in areas that are covered and sheltered from rainwater which is indirect evidence that water is penetrating from the top or through the sides of the stone towers into the mass of the stone header wall.

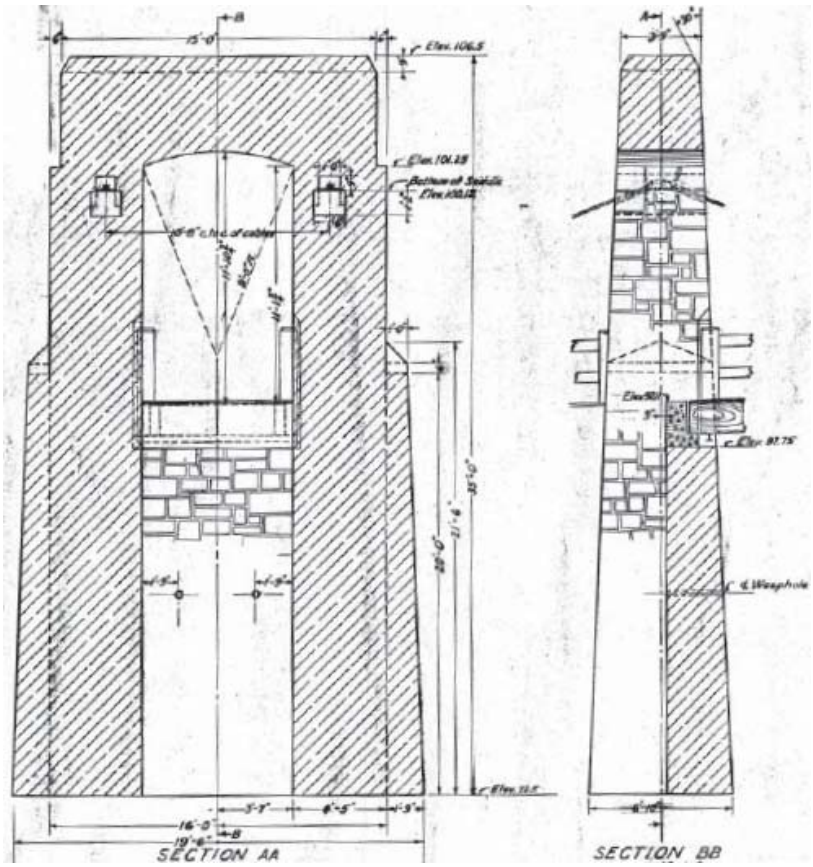

Figure 3. Pier Elevations from 1937 Drawings.

2.2 Superstructure

Steel Cables, Cable Clamps, and Hangars – The steel cables, cable clamps, and vertical hangar rods are in good condition with only minimal surface corrosion evident. The cast steel cable saddles on the stone towers are also in good condition.

Steel Floorbeams – The steel floorbeams are made up of 11 ft long 4" by 4" W sections weighing 13.8 pounds per foot. All floorbeams are in poor condition. With the addition of the center stringer and the vertical steel tube strut, water has collected under the strut and accelerated corrosion of the steel. At many of the 11 locations, the vertical tube is 90% to 100% corroded. At one location, the tube is missing. Corrosion continues at the midspan locations of the floorbeams. Advanced section loss is evident in the top and bottom flanges, and in the web, and approaches 90% in some cases. While vertical support of the outside timber stringers occurs near the floorbeam ends where corrosion is limited, the floorbeams also need to act as a tension tie, and assist in the overall lateral bracing of the span so replacement of these members should be considered a high priority.

Steel Lateral Bracing System – The bracing system under the deck consist of lightweight steel angles connected to floorbeam ends and arranged in an "X" pattern. The bracing is broken or missing in the three middle bays and is no longer functioning. This adds to the lateral instability of the structure under horizontal loads. The bracing in the other bays is heavily corroded. All bracing should be replaced.

Timber Stringers, Deck, and Railing – The two main timber stringers are in good condition. The center stringer, which is not shown on the original construction plans, is also in good condition but it is no longer reliably supported by tube struts. A structural analysis was performed on the deck planks, and it was determined that the center stringer and supports were most likely added to reduce the deflection of the deck planks. The deck planks appear to be in good condition. The railing is in fair condition with some vertical splitting of the 10" by 10" posts, and some missing dowels connecting the rail members to the posts.

SECTION 3 REPAIR RECOMMENDATIONS

3.1 Substructure

Based on the condition of the stone, it can be inferred that water penetration and stone movement from freeze thaw cycles is the cause of the deterioration of the towers. Due to the light superstructure, the low live loads that are applied on the bridge, and the mass of the supporting towers, there is no evidence that deterioration is a result of overloading. Repairs to

the towers will consist of accomplishing two primary goals: sealing the stone masonry against water penetration, and restoring the damaged stonework to good condition.

Sealing the stone masonry against water penetration will require the following actions, listed generally from the top down:

- Re-seal cap stone joints. Seal possible crack in one cap stone.
- Re-seal upper ledge joints. Slope to drain away from tower face.
- Re-seal buttress cap stone.
- Replace cracked or missing facing stones. Any cracked stones not replaced may be crack sealed by injecting a compatible epoxy grout.
- Repoint all masonry joints. Deteriorated mortar should be ground or cut out and the joints should be repointed. A soft lime mortar should be used that matches historic mortars. A soft mortar will help protect the stones against cracking and a high lime content results in a mortar that is crack resistant.

Flashing: Flashing can be added to the structure to further protect against water penetration into the masonry. The primary location for flashing should be under the cap stones. Today, the cap stone edges are flush with the stone masonry below. If flashing is added, it should protrude out from the stone face to discourage water from running down the entire face of the masonry tower. Another possible location for flashing is above the arch ring stones. Vertical flashing could be added behind the facing stones above the arch ring and protect the wall and arch ring from rain against the face of the stone wall above.

Repair to deteriorated stone masonry will require two main actions, general repairs to the facing stones and repairs to the arch ring.

General stone repairs. On all faces of the tower and wingwalls, remove and replace cracked and damaged stones. Stones can be removed by chipping with an electric chipping hammer or similar tool that can be controlled such that damage is not propagated into adjacent stones. Damaged stone should be removed to sound materials or to the back of the neat surface stones. New stones should be cut to shape to match the needed repair area and mortared into place using a mortar compatible with the existing mortar on the structure. Spot repairs are needed throughout the towers and wingwalls, and affected areas are shown in the attached sketches.

Arch ring. Repair the overhead arch ring can be done by one of several methods:

- Shore the header wall and remove and replace only the damaged arch ring stones.
- Remove the header wall in full, salvage undamaged facing stones and arch ring stones. Re-build the header wall. An option would be to source a stone of similar characteristics to the existing stone and replace the header wall will all new material.
- Other methods of repair may include installation of stainless steel tie rods vertically to hold the new arch ring stones in place, or installation of horizontal tie rods. Horizontal ties can be installed either on the interior of rebuilt masonry or on the exterior if only selective repairs are made. Horizontal ties would ensure that the arch ring stone remain compressed against one another and thus functioning properly.

Because of the evident deterioration throughout the upper wall, cracks are likely to exist throughout the volume of the wall including the interior masonry. These cracks likely hold moisture and compromise the long term integrity of the towers. If surface and selective repairs are made to the towers, interior cracks may still allow moisture penetration and reduce the life of the repairs. We recommend that a longer term, however more expensive, repair is made to the tower tops consisting of complete removal and replacement. The construction estimate in Appendix A reflects the cost of this recommendation.

Wingwalls. Repairs to the cap stone on the wingwalls will require temporary removal of the timber railing, removal of the cap stone, and some shallow excavation on the back sides of the walls. When the repairs are completed, the surface should be restored and graded such that water does not accumulate under the ground in the areas enclosed by the wingwalls. This water accumulation will result in head pressure and water penetration through the walls. There are existing weepholes in place, but based on the age of the structure, these are likely clogged up and no longer functioning properly.

The existing towers have a weathered appearance, and much of their grey appearance is due to the presence of dirt and biological elements on the surface. The original color of all of the stone was likely a buff shade, as this can be seen somewhat on the inside vertical walls under the arch ring. Local stone suppliers have indicated that new stone can be found that closely matches the color and appearance of the original stone. However, after repairs are made, the stone repairs will not have the weathered and stained appearance of the remaining original stones. To achieve a uniform appearance between new and old stones, all stone masonry and joints should be washed using low pressure water and natural bristle brushes. Cleaning

products are available that are non-damaging to masonry and mortar that can be used to accelerate the cleaning process, and if used, care should be taken to select products that are approved for use over a waterway.

General. Before final plans are prepared and the complete rehabilitation is advertised for bid, performing limited repairs on a small section or section of the towers may be prudent. Deteriorated stone can be removed to full depth and the rubble stone shaft can be inspected for cracking, moisture content, and to determine dimensions of the interior masonry stones. Work could be performed in early spring and observed through a period of freeze thaw cycles.

For rehabilitation work that is contracted out, an experienced masonry restoration cleaning and construction firm with demonstrated success on similar projects should be contracted to perform the work.

3.2 Superstructure

3.2.1 Steel floorbeam restoration

Replace steel floorbeams using new galvanized and painted steel. The outside timber stringers are continuous, so the floorbeams may be removed and replaced one at a time if the bridge is closed. New U-Bolts should also be provided because it is most likely that the removal of the existing floorbeams will result in damage to the U-Bolts. Before floorbeam removal, detailed vertical measurements should be taken from the cable clamp to the floorbeams so that the loads on the cable are unchanged from the present condition. The support for the center stringer should be designed to effectively shed water and be corrosion resistant.

3.2.2 Timber repairs

Install new railing dowels where missing from rail post connections. Monitor condition of cracked timbers for deterioration and internal decay.

SECTION 4 FUTURE STEPS

Utility coordination: Utilities are present near and on the bridge. There are five conduits supported under the deck on top of the floorbeams. WE Energies has facilities that cross the bridge in two conduits. These lines are active and are a significant feed that continues through Hoyt Park and beyond. As the floorbeams are replaced, these lines will either need to be de-energized or relocated off of the structure. In the past, AT&T had facilities that were relocated underground around the time that the Hoyt Park pool was rehabilitated.

Historic Preservation: Hoyt Park has been determined to be eligible for the historic register, and the pedestrian bridge would surely be considered as a contributing factor to that status. If federal funding is used for the project, Section 106 coordination will be critical in the final design of the repairs and modifications. If only local funds are used, then the coordination becomes more straightforward. However, the City of Wauwatosa has an active and engaged community that is very likely to have an interest in rehabilitating the bridge and preserving the historic integrity of the structure. Coordination would therefore be recommended with the City of Wauwatosa Historic Preservation Commission and the Wauwatosa Historical Society, as well as the Wisconsin Historical Society. The recommendations and cost estimates in this report are based on meeting the accepted preservation criteria.

Waterway: Coordination should take place with the Wisconsin Department of Natural Resources and the US Army Corps of Engineers at an early phase in design. This project will not impact the river; however, temporary access to the underside of the bridge will result in some disturbance and subsequent restoration of the soils near the river. If cleaning of the stone masonry is done, this work may also have an impact on water quality.

Other Groups: Friends of Hoyt Park was a major supporter and fundraiser for the restoration of the Hoyt Park pool. Other community groups and the general public make regular use of the Hoyt Park Pool and the bridge and will have an interest in this project's success.

Final Design: Prior to bridge rehabilitation, a specialist in historic stone masonry work should be contracted to perform a detailed analysis of the stone structure and recommend specific detailed restoration work including matching the old stone to new stone, cleaning, and joint sealing.

General Construction: In addition to the rehabilitation activities described above, construction access to both ends of the bridge will necessitate the removal of some of the trees growing adjacent to the bridge. The contractor should be able to access the lower levels of the river bank from both sides of the river. There is not anticipated to be a need for a causeway or fill placement within the waterway. The asphalt path approaching the structure will also be partially removed and then repaved. Contractor staging areas are available and the County should identify preferred areas for storage of equipment and material. General seeding, site restoration, and erosion control will be required. Silt fence, and possibly turbidity barrier will be required downslope of disturbed soils.

APPENDIX A - COST ESTIMATE

Hoyt Park Bridge Rehabilitation Budgetary Construction Estimate				
Milwaukee County				
Inspection and Repair Recommendations				
1/31/2014				
	Unit Cost	Unit	Quantity	Total
Site Work:				
Temp Access Road	$ 1,000.00	Each	2	$ 2,000.00
Excavation Common	$ 25.00	CY	12	$ 300.00
Topsoil	$ 5.00	SY	53	$ 265.00
Restoration Seeding	$ 0.50	SY	159	$ 79.50
Clearing & Grubbing	$ 4,000.00	LS	1	$ 4,000.00
Erosion Mat	$ 4.00	SY	53	$ 212.00
Base and Shoulder Aggregate	$ 60.00	TON	15	$ 900.00
Asphalt Surface	$ 150.00	TON	30	$ 4,500.00
Substructure (Stone Masonry)				
Stone Masonry Repairs	$ 230.00	SF	85	$ 19,550.00
Flashing	$ 14.18	SF	112.5	$ 1,594.69
Repointing Masonry Joints	$ 10.00	LF	5936	$ 59,360.00
Re-Sealing Cap Stone Joints	$ 5.00	LF	24	$ 120.00
Asbestos Abatement Contingency	$ 8,000.00	LS	1	$ 8,000.00
Tower Cap Reconstruction - Masonry	$ 369.00	CF	250	$ 92,250.00
Cleaning	$ 4.10	SF	3536	$ 14,497.60
Superstructure (Assume Deck Removal not needed)				
Structural Steel	$ 85,800.00	LS	1	$ 85,800.00
Timber Railing Repairs	$ 3,000.00	LS	1	$ 3,000.00
			Sub Total:	$ 296,428.79
	30%	Construction Contingency:		$ 88,928.64
	Utility Relocation Contingency:			$ 40,000.00
			Total:	$ 425,357.42

APPENDIX B – INSPECTION SKETCHES

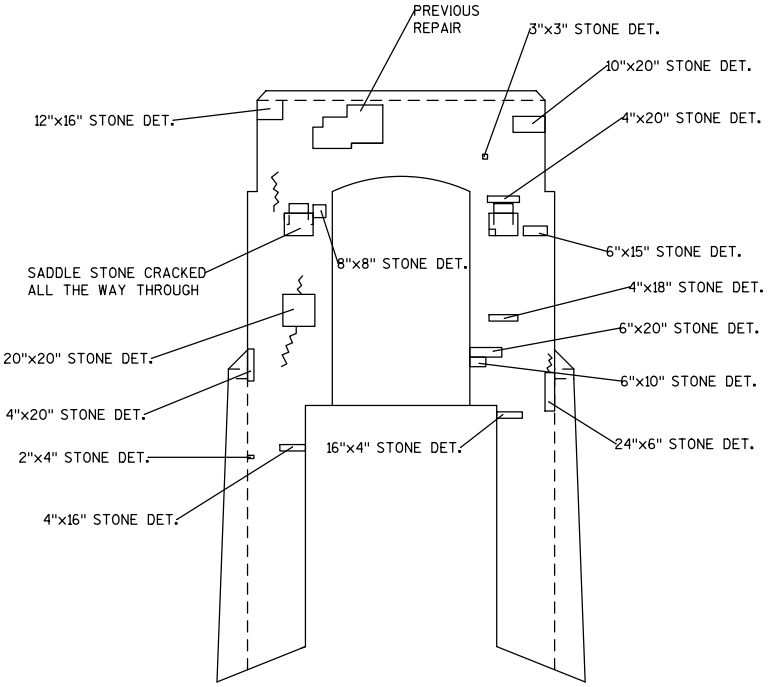

WEST SIDE (FACING EAST)

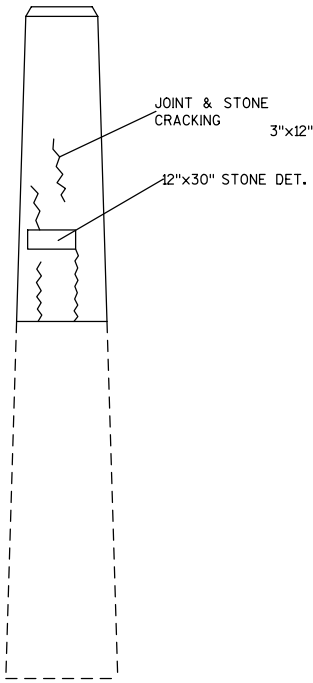

SOUTH LEG INSIDE FACE

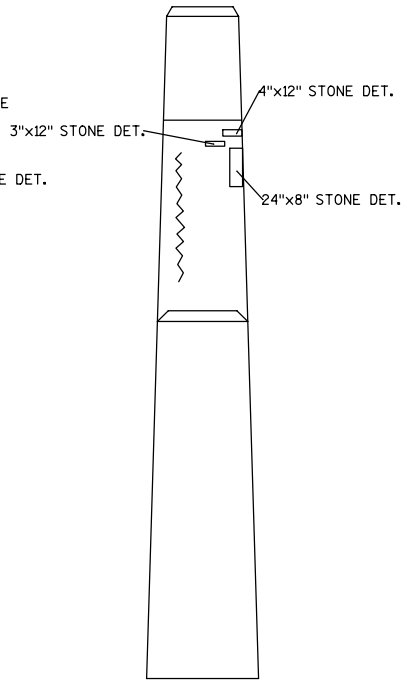

SOUTH LEG OUTSIDE FACE

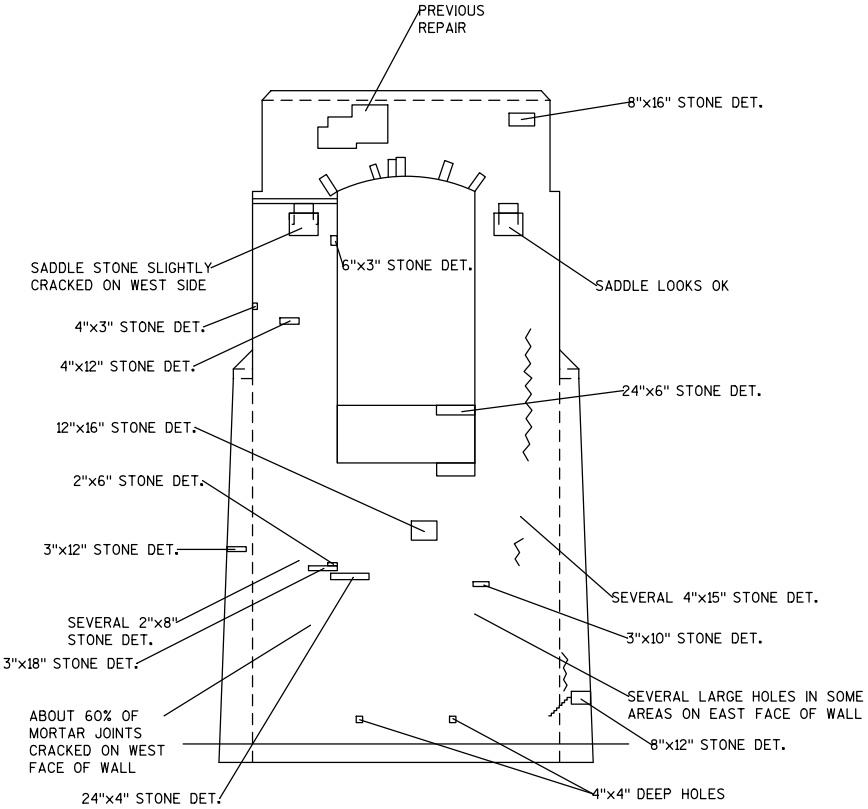

EAST SIDE (FACING WEST)

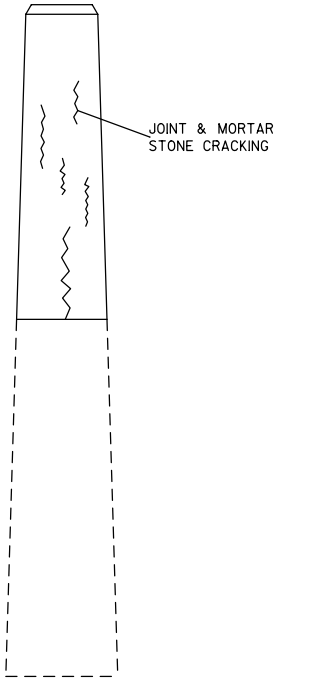

NORTH LEG INSIDE FACE

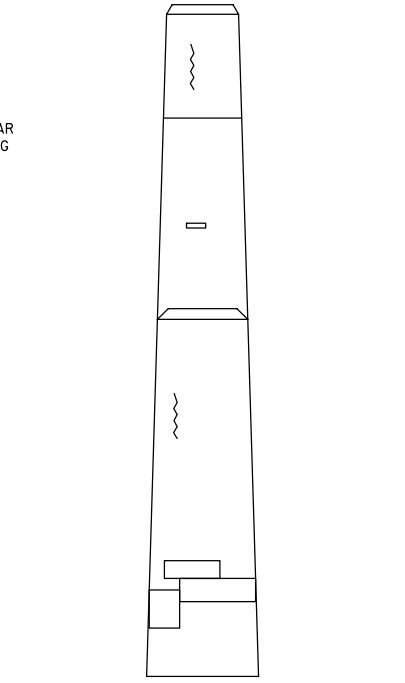

NORTH LEG OUTSIDE FACE

WEST PIER

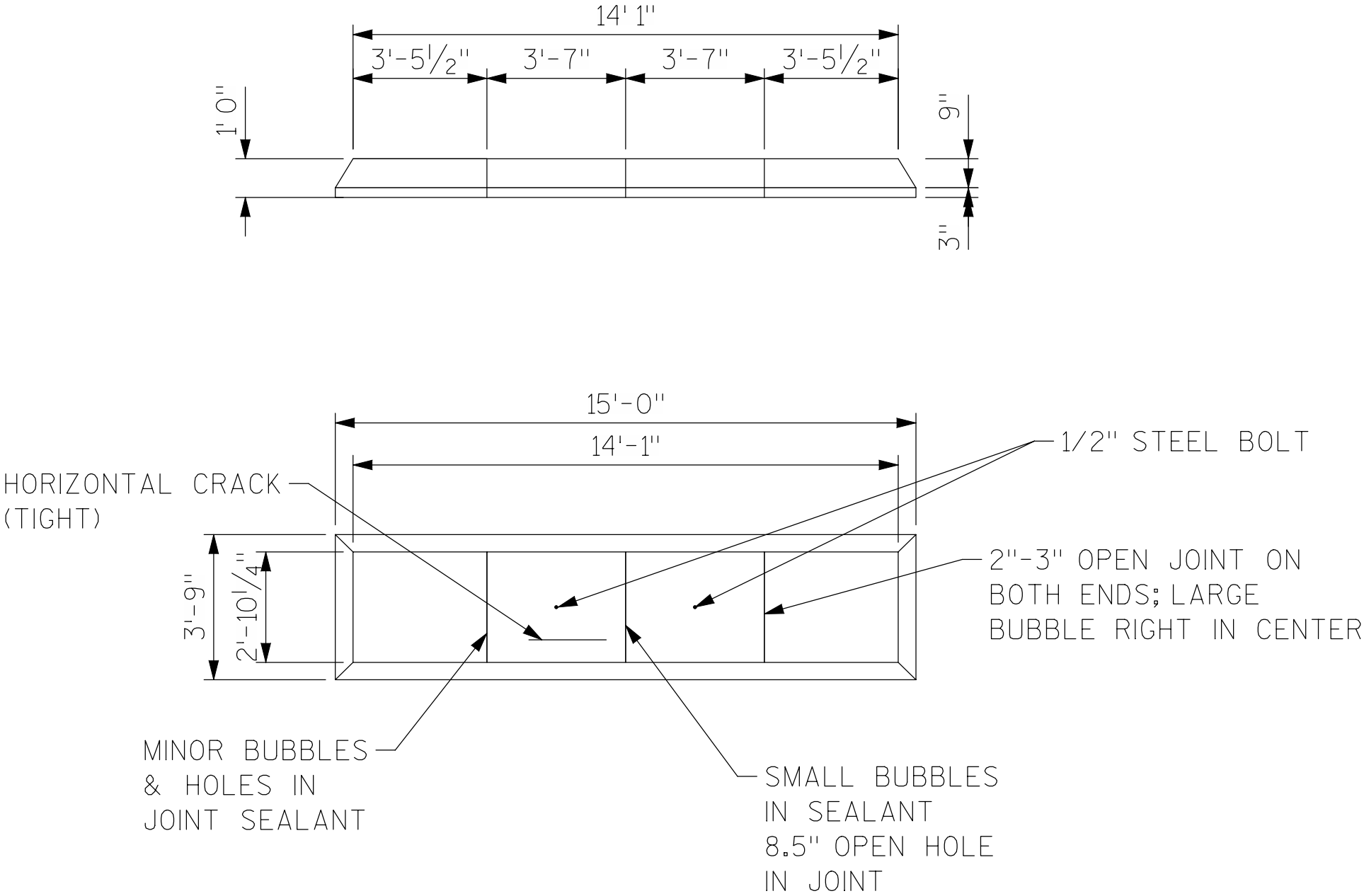

WEST PIER CAP STONES

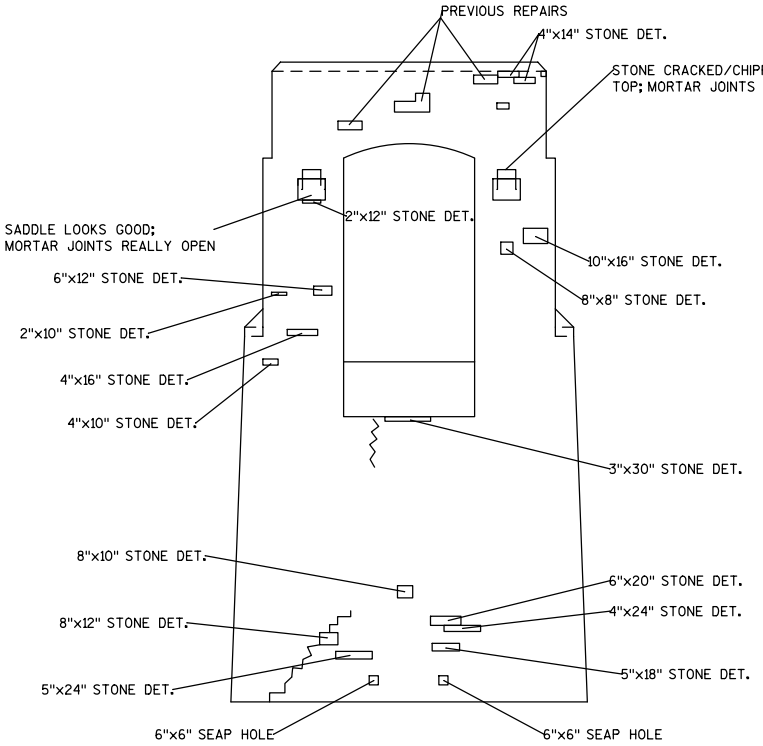

WEST SIDE (FACING EAST)

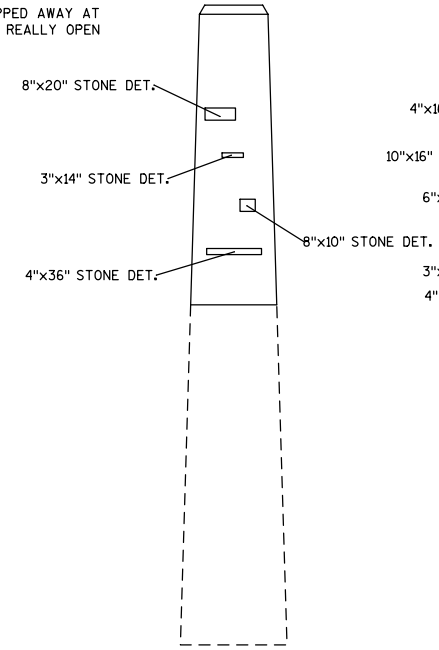

NORTH LEG INSIDE FACE

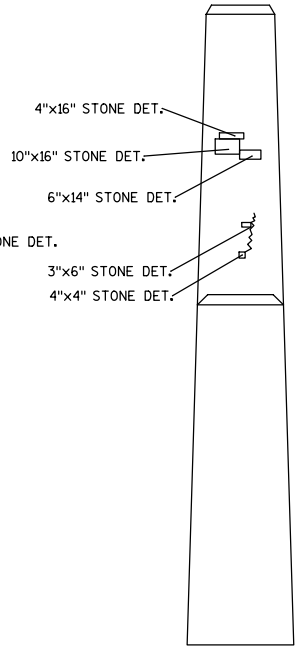

SOUTH LEG OUTSIDE FACE

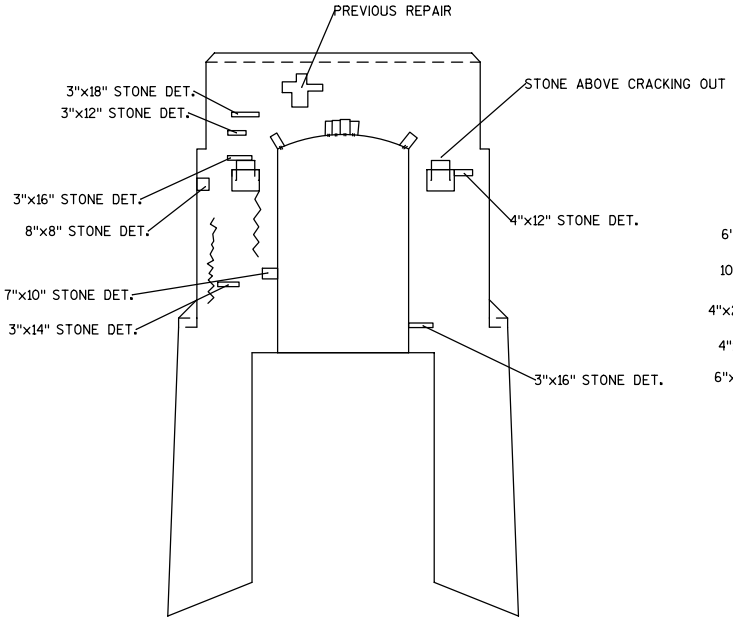

EAST SIDE (FACING WEST)

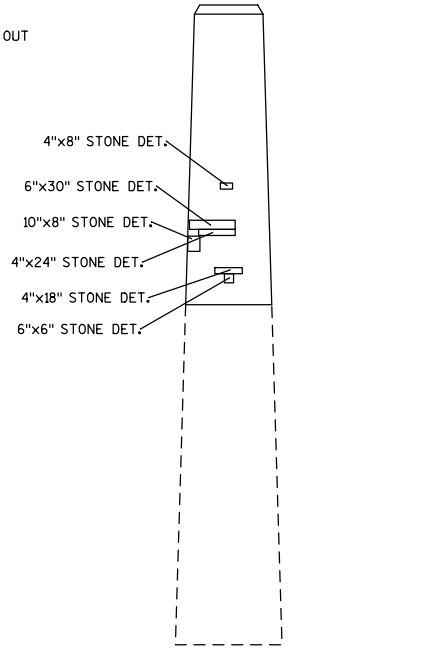

SOUTH LEG INSIDE FACE

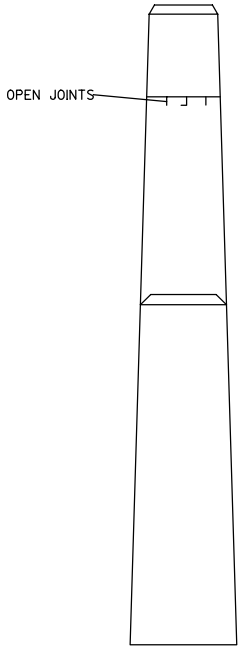

NORTH LEG OUTSIDE FACE

EAST PIER

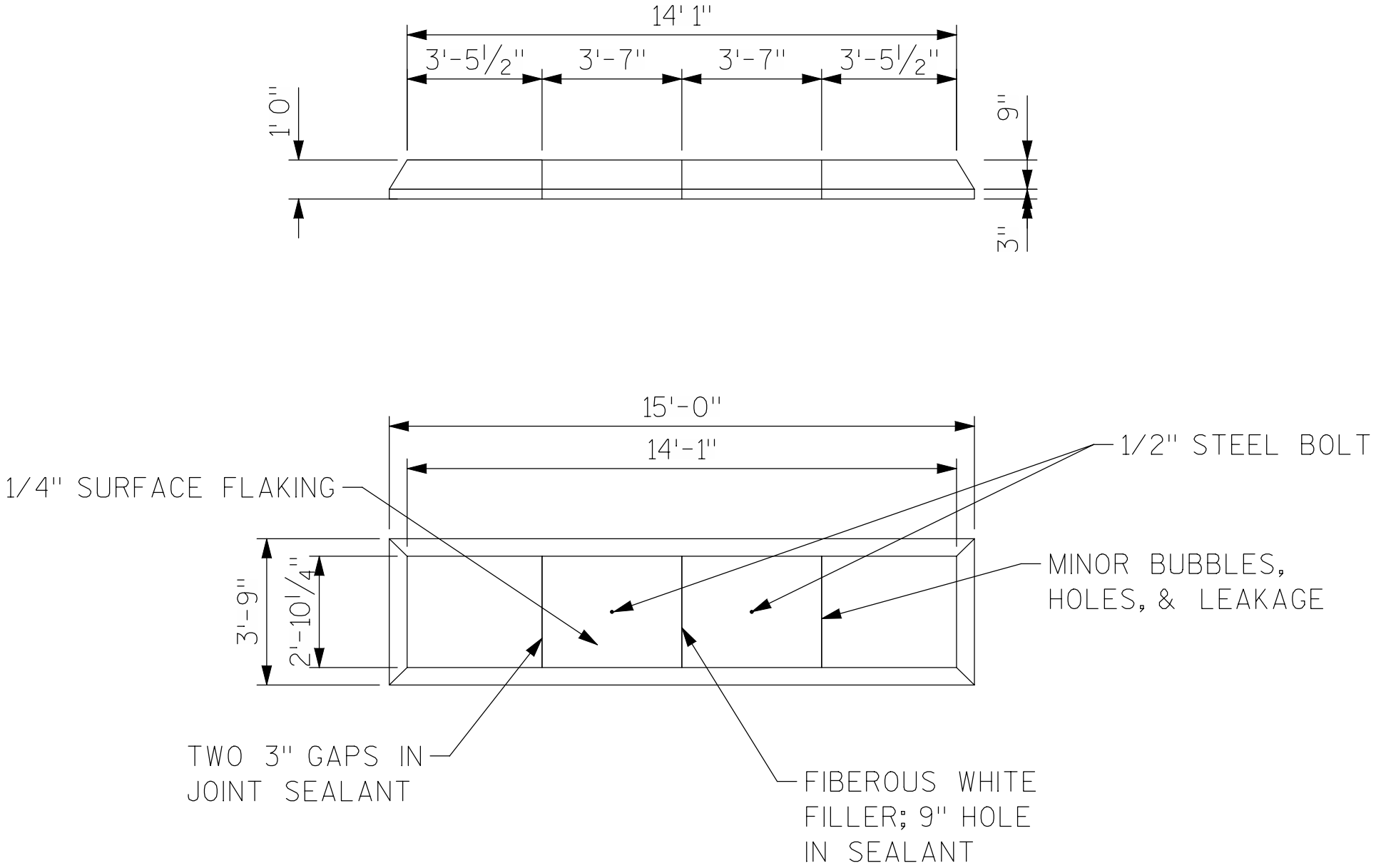

EAST PIER CAP STONES

APPENDIX C - PHOTOGRAPHS

Photo 1 - East Pier Looking Northeast.

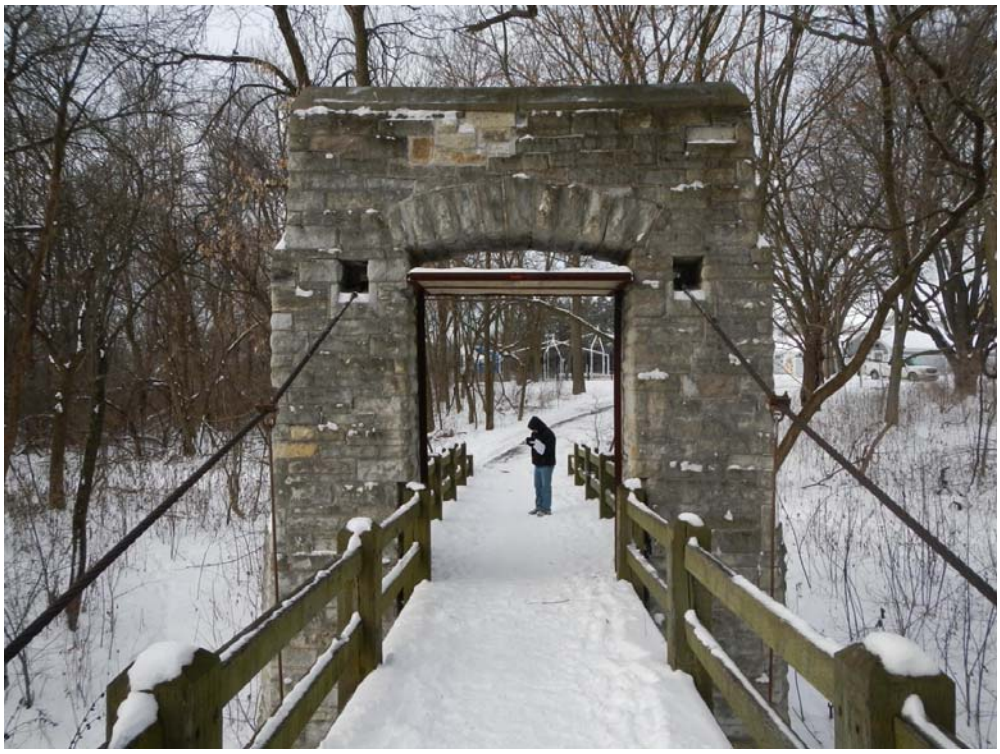

Photo 2 - West Pier Looking West.

Photo 3 – Top of west tower. Note bolt and missing joint sealer near top of photo.

Photo 4 – Side of cap stone and top layer of masonry at NW corner of west pier. Note cracking in masonry joints and severe cracking of stones.

Photo 5 - West Tower Arch Ring Looking West.

Photo 6 - Typical stone deterioration, cracking, and open masonry joints. Inside of south leg of west tower.

Photo 7 - Typical stone deterioration, cracking, and open masonry joints. West side of north leg of west tower.

Photo 8 – Saddle stone cracking at the north cable saddle on the east tower.

Photo 9 – Underside of deck looking toward west tower.

Photo 10 - Typical heavily corroded floorbeam and tube strut under the center stringer.

Photo 11 – Broken lateral bracing near midspan.

Photo 12 - Heavy corrosion on floorbeam and strut at the west tower.

Photo 13 - Typical cable clamp and steel hangar rod showing light surface corrosion.

Photo 14 - Typical U-Bolt hanger supporting ends of steel floorbeams.

APPENDIX D – BRIDGE PLANS

PROPOSED SWIMMING POOL

PROPOSED BATH HOUSE 1ST FLOOR ELEV. 96.8

C. M. St. P. & P. Ry.

MENOMONEE RIVER

OLD RIVER CHANNEL TO BE FILLED

PARKWAY DRIVE

PROPERTY LINE

LUDINGTON AVE.

ROAD CONNECTING DRIVE TO LUDINGTON AVE.

Prop. Stone

AREA COVERED BY PLOT PLAN

MILWAUKEE COUNTY REGIONAL PLANNING DEPARTMENT

PLOT PLAN

MENOMONEE RIVER PARKWAY - PROJ.# 30

SUSPENSION FOOT BRIDGE - LUDINGTON AVE. ENTRANCE

SCALE 1" = 50'

FEBRUARY 1937

LANDSCAPE DESIGN SECTION	ENGINEERING DESIGN SECTION
Landscape Architect	Senior Ass't. Civil Engineer
Survey.....	Approved: ..... Supervising Engineer — Date 2/12/37
Plan.....K.R.S.	Approved: ..... Highway Commissioner & Planning Engineer — Date 2/12/37
Tracing.....K.R.S.	
Checked.....	

DEPARTMENT OF THE INTERIOR
NATIONAL PARK SERVICE
AND
MILWAUKEE COUNTY PARK COMMISSION
CO-OPERATING

BRANCH OF PLANNING — STATE PARKS DIVISION

Prepared by ..... Date ..... Superintendent Milwaukee County Park Commission

Recommended ..... Date .....

Approved ..... Date 2-8-37

S.P.-WIS. 5199
H.C. 5010-1-5

GRAPHIC SCALE

Tracing 46-B-28

MICROFILMED

100475 17-68-194

NOTE:
See Landscape Architect about stone bond.
Strike stone bond off flush.
Use no diagonal beads.

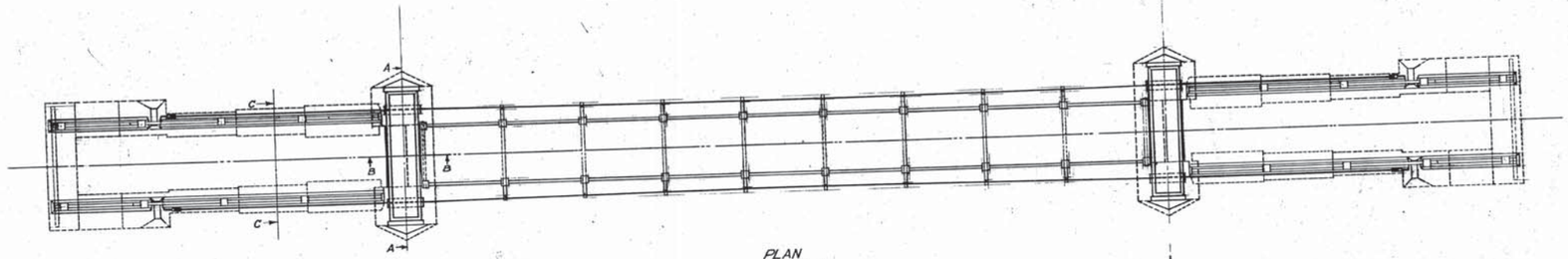

PLAN
Scale 1/8" = 1'-0"

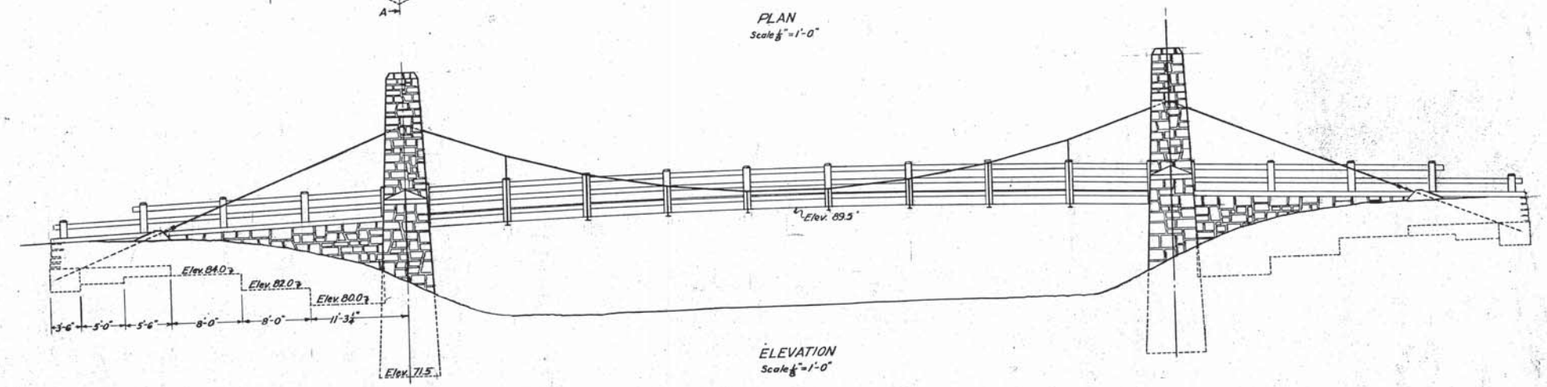

ELEVATION
Scale 1/8" = 1'-0"

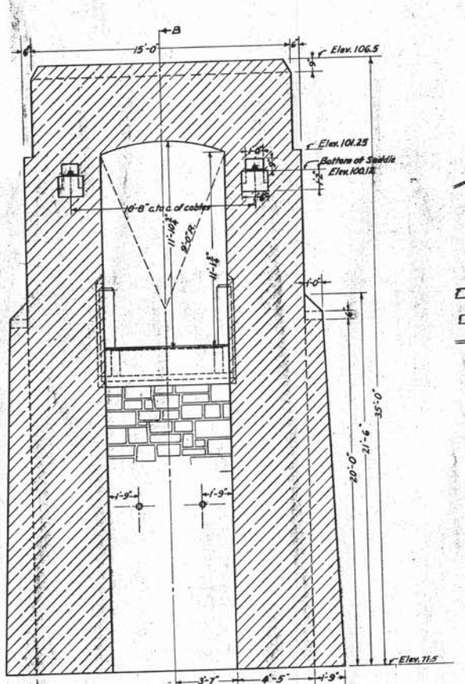

SECTION AA
Scale 1/4" = 1'-0"

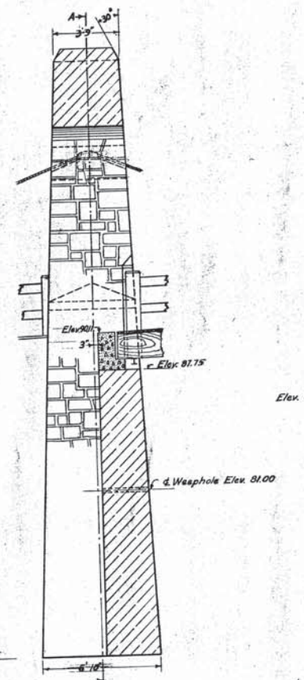

SECTION BB
Scale 1/4" = 1'-0"

PLAN AT ELEVATION 71.5
Scale 1/4" = 1'-0"

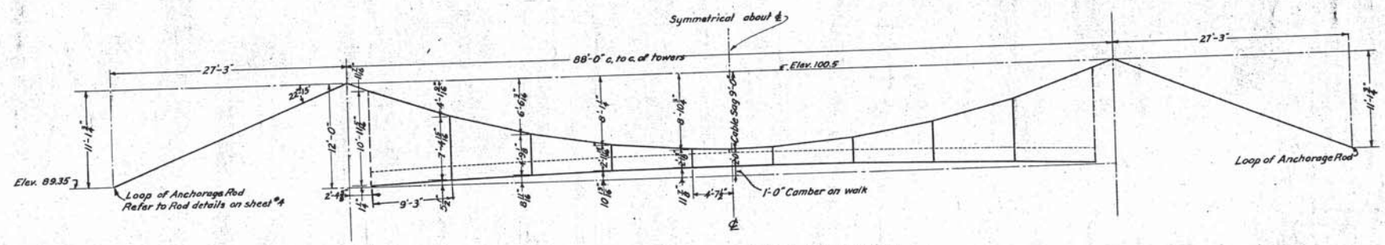

DIAGRAM SHOWING BASIC DIMENSIONS
Scale 1/8" = 1'-0"

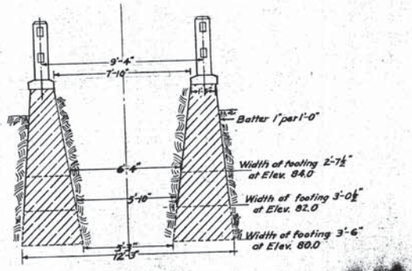

SECTION CC
Scale 1/4" = 1'-0"

MICROFILMED

DEPARTMENT OF THE INTERIOR
NATIONAL PARK SERVICE
AND
MILWAUKEE COUNTY PARK COMMISSION
CO-OPERATING

BRANCH OF PLANNING — STATE PARK DIVISION

Prepared by: Jerome Dunigan, Chief, Cooperating Milwaukee County Park Commission
Recommended: Walter P. Wallace, Inspector — Date 4/1/37
Approved: Earl C. Greene, Regional Officer — Date 4/12/37

SYMBOL	NUMBER	DATE	JOB PLAN
S.P.-WIS.	9		H.C. 9010A-2-5

MILWAUKEE COUNTY REGIONAL PLANNING DEPARTMENT

PROJECT NO. 30

MENOMONEE RIVER PARKWAY SUSPENSION FOOT BRIDGE

LUDINGTON AVENUE ENTRANCE

LANDSCAPE DESIGN SECTION — Alfred L. Bowman, Landscape Architect

ENGINEERING DESIGN SECTION — R. G. Behrens, Senior Ass't. Civil Engineer

Survey ..... Plan WON Tracing EJE Checked .....

Approved: ..... Supervising Engineer — Date 4/2/37

Approved: ..... Highway Commissioner & Planning Engineer — Date 4/1/37

46-8-28

15-35

100474 17-168-193

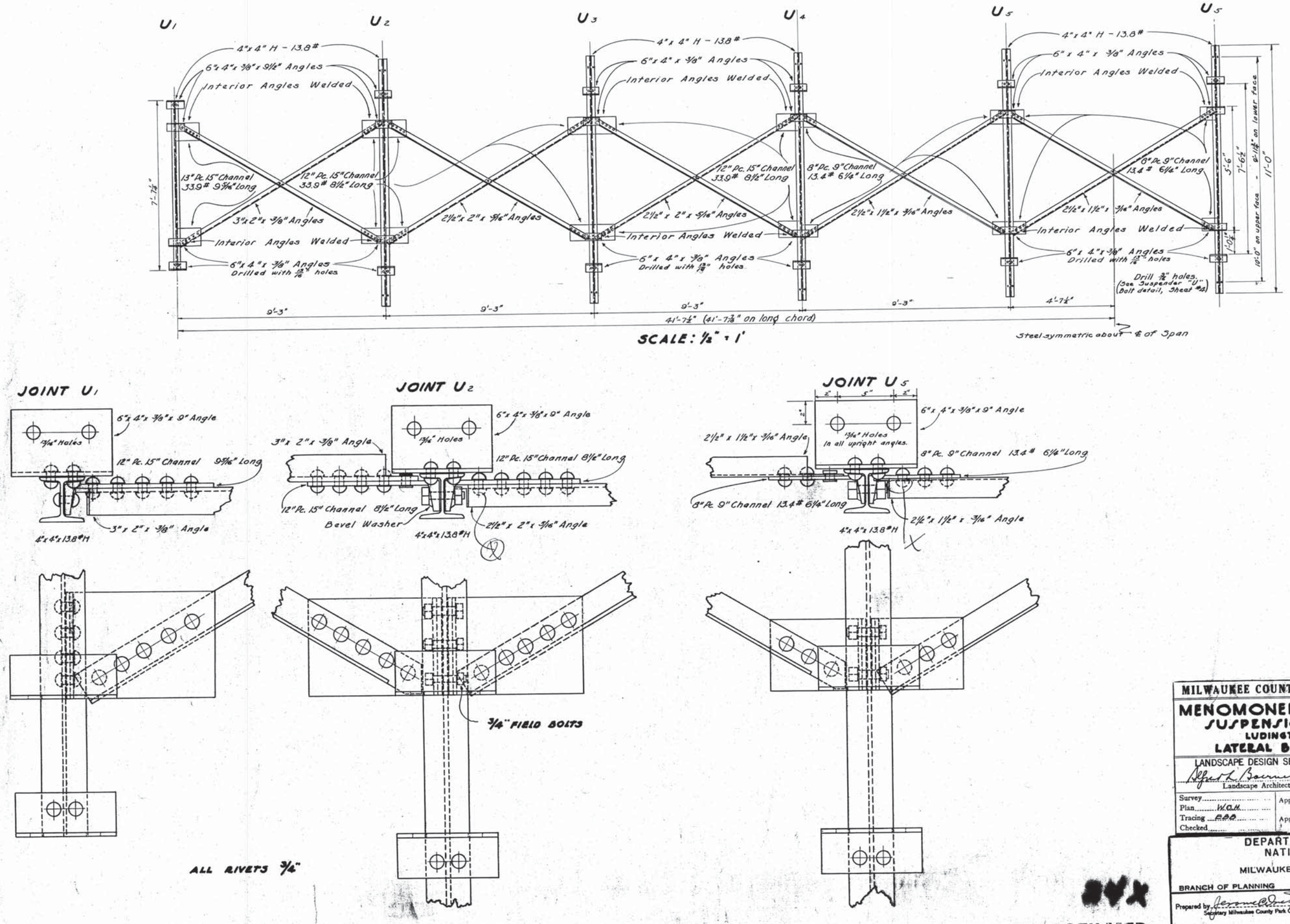

MILWAUKEE COUNTY REGIONAL PLANNING DEPARTMENT

MENOMONEE RIVER PARKWAY PROJECT NO. 30

SUSPENSION FOOT BRIDGE

LUDINGTON AVENUE ENTRANCE FEB. 1937

LATERAL BRACING STEEL DETAILS

LANDSCAPE DESIGN SECTION	ENGINEERING DESIGN SECTION
Alfred L. Boerner, Landscape Architect	Ray E. Behrens, Senior Ass't. Civil Engineer

Survey ..... Plan W.O.H. Tracing EBB Checked .....

Approved: E. A. Howard, Supervising Engineer Date 2/17/37

Approved: W. Stavanaugh, Highway Commissioner & Planning Engineer Date 2/17/37

DEPARTMENT OF THE INTERIOR
NATIONAL PARK SERVICE
AND
MILWAUKEE COUNTY PARK COMMISSION
CO-OPERATING

BRANCH OF PLANNING — STATE PARK DIVISION

Prepared by Jerome C. Drezzle, Secretary Milwaukee County Park Commission Date .....

Recommended ..... Inspector Date .....

Approved Earl C. Greuer, Regional Officer Date 3-8-37

S.P.-WIS.
H.C. 9010-3-5

SYMBOL
NUMBER 101A
DATE
JOB PLAN

MICROFILMED

SHEET 3 OF 3 SHEETS FILE Tracing 46-B-28

100473 17-168-193

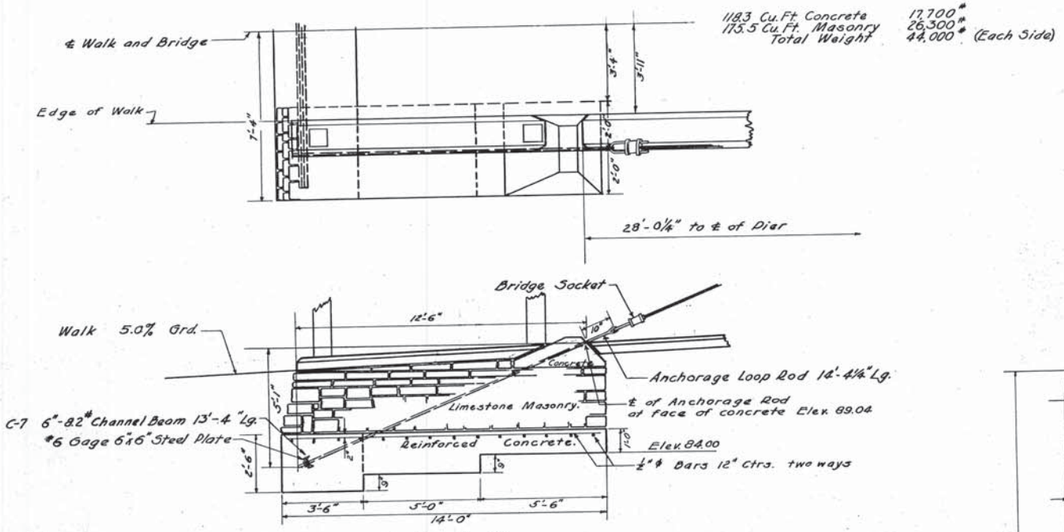

Scale: 1" = 3'

ANCHORAGE ASSEMBLY

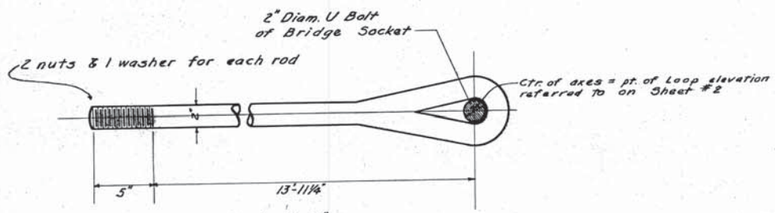

Scale: 1" = 6"

ANCHORAGE LOOP ROD

4 Required

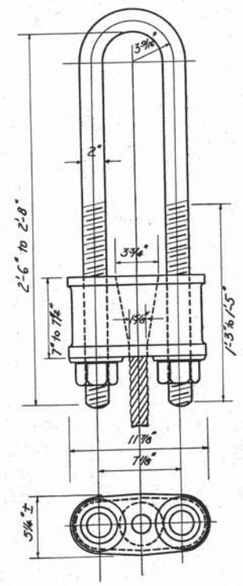

Scale: 1" = 6"

BRIDGE SOCKET DETAILS

4 Required

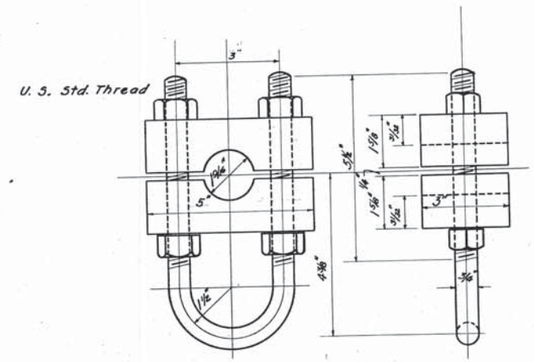

Scale: 1" = 2"

SUSPENDER CLAMP DETAILS

16 Required, Galvanized

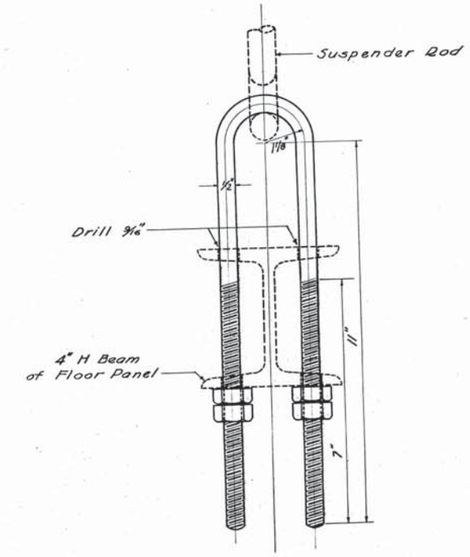

Scale: 1" = 2"

SUSPENDER "U" BOLT

16 Required

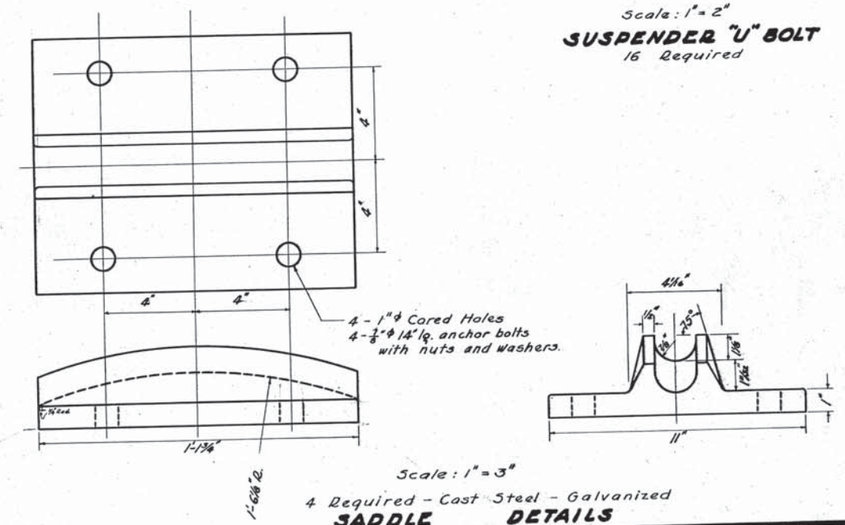

Scale: 1" = 3"

4 Required - Cast Steel - Galvanized

SADDLE DETAILS

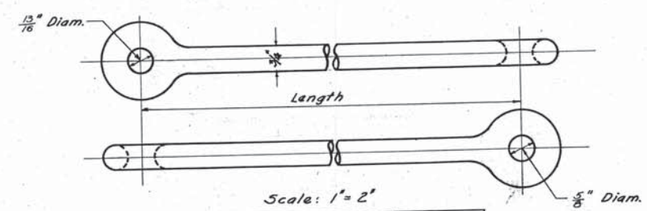

Scale: 1" = 2"

No. Required	Suspender No.	Rod Diameter	Length
4	2 & 9	¾"	1'-4¾"
4	3 & 8	¾"	2'-3 5/16"
4	4 & 7	¾"	4'-0½"
4	5 & 6	¾"	6'-8 5/16"

SUSPENDER ROD DETAILS

Mild Steel - Galvanized

MILWAUKEE COUNTY REGIONAL PLANNING DEPARTMENT

MENOMONEE RIVER PARKWAY PROJECT No 30

SUSPENSION FOOT BRIDGE

LUDINGTON AVENUE ENTRANCE

Scales: As Shown ~ Feb. 1937

LANDSCAPE DESIGN SECTION — Alfred L. Bourner, Landscape Architect

ENGINEERING DESIGN SECTION — Ray E. Behrens, Senior Ass't. Civil Engineer

Survey ..... Plan W.O.H. Tracing EBB Checked .....

Approved: E. W. Howard, Supervising Engineer — Date 2/17/37

Approved: W. Stavanagh, Highway Commissioner & Planning Engineer — Date 2/17/37

DEPARTMENT OF THE INTERIOR
NATIONAL PARK SERVICE
AND
MILWAUKEE COUNTY PARK COMMISSION
CO-OPERATING

BRANCH OF PLANNING — STATE PARK DIVISION

Prepared by Jerome C. Dietz, Secretary Milwaukee County Park Commission — Date

Recommended ..... Inspector — Date

Approved Earl C. Greene, Regional Officer — Date 3-8-37

S.P.-WIS.
H.C. 9010-4-5

SYMBOL — NUMBER 101A — DATE — JOB PLAN

MICROFILMED

100472 17-168-191

SHEET 4 OF 5 SHEETS

FILE Tracing 46-B

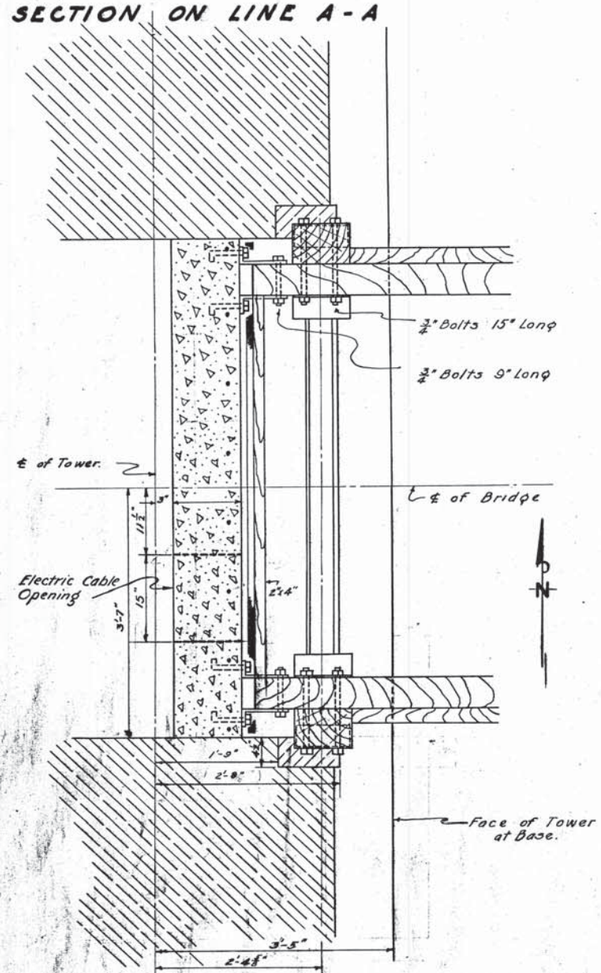

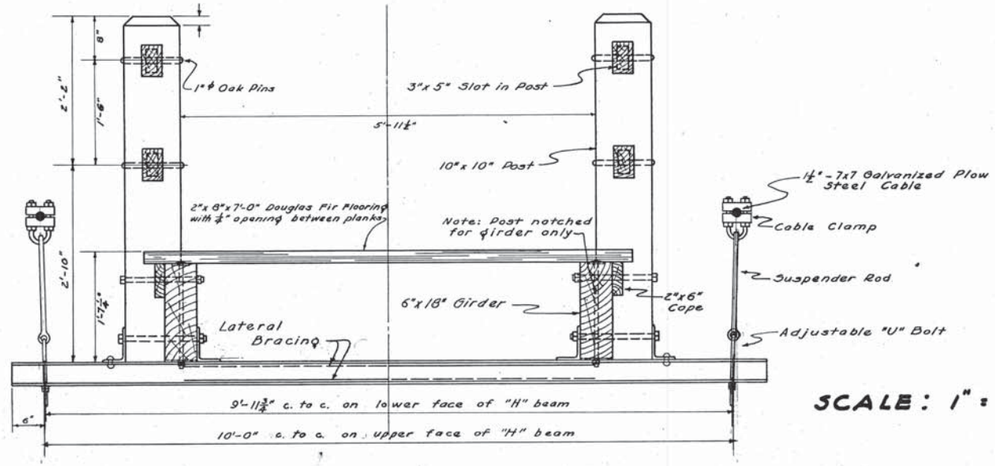

SCALE: 1" = 1'

SECTION OF BRIDGE AT ℄ OF SPAN

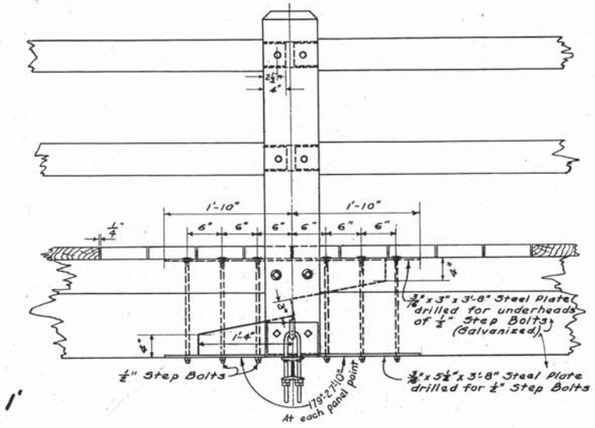

SIDE ELEVATION SHOWING SPLICE IN FLOOR GIRDERS

SCALE: 1" = 1'

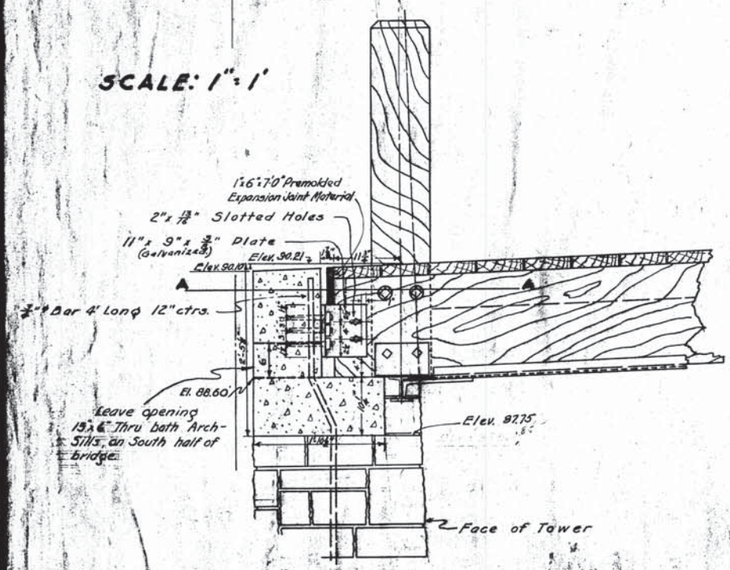

SECTION ON ℄ DETAIL OF BRIDGE SEAT

MICROFILMED

REVISED	
11/8/37	KRL

MILWAUKEE COUNTY REGIONAL PLANNING DEPARTMENT

MENOMONEE RIVER PARKWAY PROJECT NO. 30
SUSPENSION FOOT BRIDGE
LUDINGTON AVENUE ENTRANCE
Scales: as shown. February 1937

LANDSCAPE DESIGN SECTION	ENGINEERING DESIGN SECTION
Alfred L. Bourner, Landscape Architect	Ray E. Behrens, Senior Ass't. Civil Engineer

Survey
Plan W.O.H.
Tracing EBB
Checked

Approved: E. A. Harvard, Supervising Engineer — Date 2/17/37
Approved: W. A. Cavanaugh, Highway Commissioner & Planning Engineer — Date 2/17/37

DEPARTMENT OF THE INTERIOR
NATIONAL PARK SERVICE
AND
MILWAUKEE COUNTY PARK COMMISSION
CO-OPERATING

BRANCH OF PLANNING — STATE PARK DIVISION

Prepared by Jerome Dreyfus, Secretary Milwaukee County Park Commission — Date
Recommended — Inspector — Date
Approved Eric C. Truer, Regional Officer — Date 3-8-37

S.P.-WIS.
H.C. 9010-5-5

SYMBOL
NUMBER 101 A
DATE
JOB PLAN

SHEET 5 OF 5 SHEETS FILE Tracing 46-B-28

100411 17-168-190

APPENDIX E - COMPUTATIONS

benesch engineers · scientists · planners	Comp by: D. Krell, P.E.	Date: 12/20/2013	Sheet 1 of 4		
	Chkd. by: W. Zippel, P.E.	Date: 1/6/2014	Job No. **20175.00**		
	Project: **Hoyt Park Bridge - Timber Deck**				
	Element: Allowable Pedestrian Live Load				

Hoyt Park Bridge – Timber Deck Rating:

Construction documents for the Hoyt Park Bridge indicate the suspended pedestrian bridge over the Menomonee River are dated 1937. The timber deck planks are called out as 2"x8"x7'-0" Douglas Fir Flooring The planks span between two 6"x18" Girders. The deck is supspended.

At some intermediate point, a third stringer was added in the center of the deck span, which sits on 4x4 tube struts. The struts are up to 100% corroded, and in one case, the strut is missing.

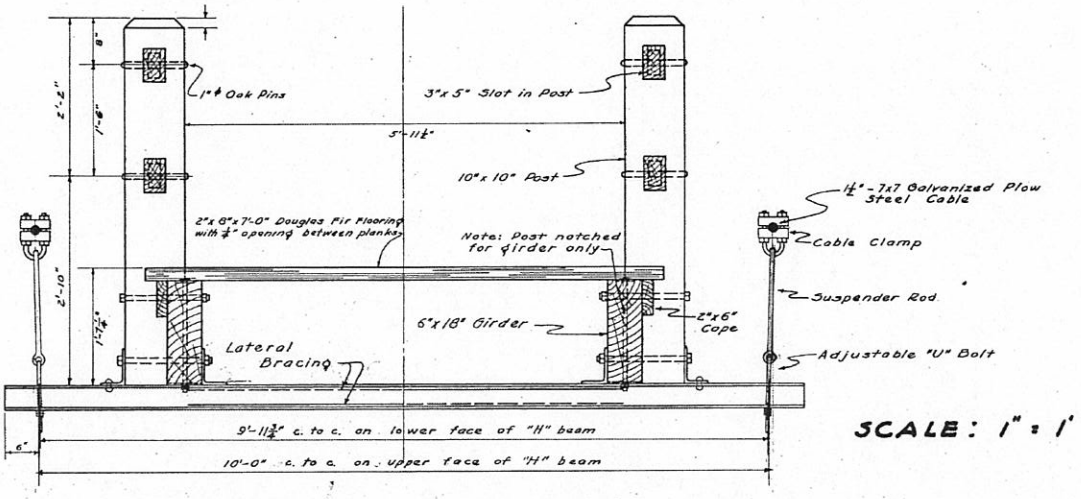

SECTION OF BRIDGE AT ℄ OF SPAN

Objective: Determine the allowable pedestrian live load for the timber decking.

The field dimensions of the planks are 1½"x7½". Current dressed 2x8's measure 1½"x7¼", so the existing planks are slightly larger.

For Pedestrian Bridge design:

Pedestrian Live Load:

Uniform Live Load:

Pedestrian bridges shall be designed for an evenly distributed live load of 85 pounds per square foot (psf) of deck. When the deck area exceeds 400 square feet, the load may be reduced in accordance with the following formula:

$W=85(0.25 + 15/(A^{1/2}))$

W is the Pedestrian Load (psf) A is the Deck influence area

The reduced design load shall be no less than 65 psf.

BRIDGE AREA:

Bridge width: $b = 6$ ft

Bridge span: $L = 88$ ft

Deck Area: $A = b*L =$ **528** ft^2

Therefore, for the bridge:

Uniform Pedestrian Load: $W = 85psf*(0.25 + 15ft/(A^{0.5})) =$ **76.7** psf

For a deck plank however:

Deck width: $b_d = 7.5$ in

Length board: $L_d = 7$ ft

Influence Area: $A_d = b_d \times L_d =$ **4.38** ft^2

Therefore, for the deck plank:

Uniform Pedestrian Load: $W = \min(85psf, 85psf*(0.25 + 15ft/(A_d^{.5}))) =$ **85.0** psf

Load on one plank: $w_d = W*7.5in =$ **53.13** plf

Check the existing board for the full span with the 85 psf live load (53.13 plf):

DECK PLANK ANLAYSIS

TIMBER BEAM ANALYSIS

Timber section properties

Section depth $D =$ **1.50** in

Section breadth $B =$ **7.50** in

Section Properties

$A = B \times D =$ **11** in^2

$I_x = B \times D^3/12 =$ **2** in^4 $\quad I_y = D \times B^3/12 =$ **53** in^4

$Z_x = B \times D^2/6 =$ **3** in^3 $\quad Z_y = D \times B^2/6 =$ **14** in^3

$r_x = \sqrt{(I_x/A)} =$ **0.4** in $\quad r_y = \sqrt{(I_y/A)} =$ **2.2** in

$E =$ **1400** ksi

Continuous Beam Analysis

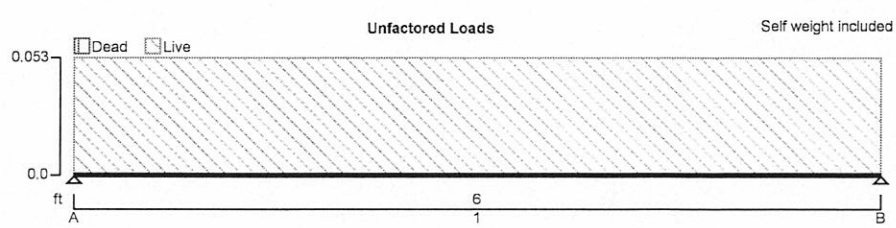

CONTINUOUS BEAM ANALYSIS - INPUT

BEAM DETAILS

Number of spans = **1**

Material Properties:

Modulus of elasticity = **1400** ksi Material density = **35** pcf

Support Conditions:

Support A Vertically **"Restrained"** Rotationally **"Free"**

Support B Vertically **"Restrained"** Rotationally **"Free"**

Span Definitions:

Span 1 Length = **6.000** ft Cross-sectional area = **11** in^2 Moment of inertia = **2.11** in^4

LOADING DETAILS

Beam Loads:

Load 1 Self weight Dead load = **1.000**

Load 2 UDL Live load **0.05** kips/ft

LOAD COMBINATIONS

Load combination 1 - D + L

Span 1 1×Dead + 1×Live

CONTINUOUS BEAM ANALYSIS - RESULTS

Support Reactions - Combination Summary

Support A	Max react = **-0.17** kips	Min react = **-0.17** kips	Max mom = **0.00** kip_ft	Min mom = **0.00** kip_ft
Support B	Max react = **-0.17** kips	Min react = **-0.17** kips	Max mom = **0.00** kip_ft	Min mom = **0.00** kip_ft

Support Deflections - Combination Summary

Support A	Max def = **0.000** in	Min def = **0.000** in	Max rot = **1.40** deg	Min rot = **1.40** deg
Support B	Max def = **0.000** in	Min def = **0.000** in	Max rot = **-1.40** deg	Min rot = **-1.40** deg

Beam Max/Min results - Combination Summary

Maximum shear = **0.2** kips Minimum shear = **-0.2** kips

Maximum moment = **0.3** kip_ft Minimum moment = **0.0** kip_ft

Maximum deflection = **0.551** in Minimum deflection = **0.000** in

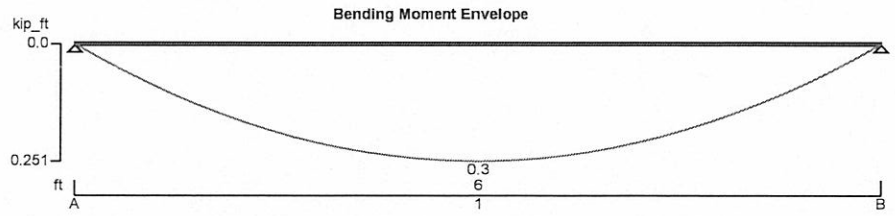

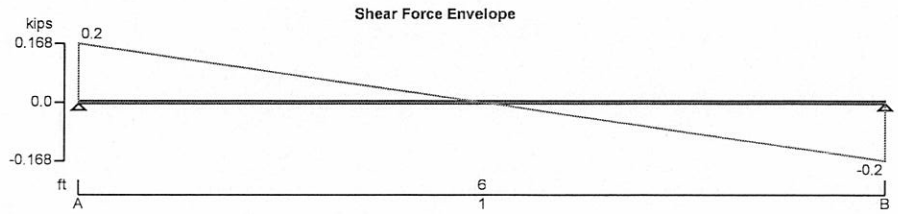

benesch engineers · scientists · planners	Comp by:	D. Krell, P.E.	Date:	12/20/2013	Sheet	4	of 4
	Chkd. by:	W. Zippel, P.E.	Date:	1/6/2014	Job No.	**20175.00**	
	Project:	**Hoyt Park Bridge - Timber Deck**					
	Element:	Allowable Pedestrian Live Load					

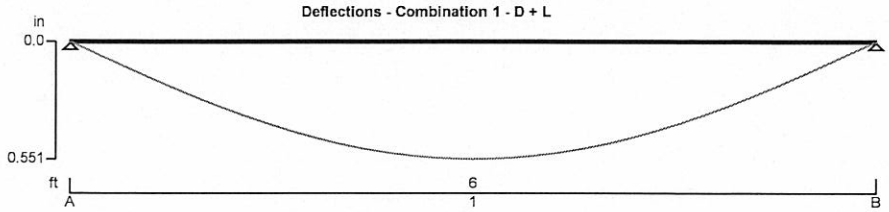

benesch engineers · scientists · planners	Comp. by: D. KREIL	Date: 12/20/13	Sheet 1 of 2
	Chkd. by: WJZ	Date: 1/6/2014	Job No. 20175.00
	Project: HOFF PARK BRIDGE – TIMBER DECK		
	Element: ALLOWABLE PEDESTRIAN LOAD		

CHECK BENDING ON DOUG-FIR DECKING:

F_b = 1650 PSI (NDS TABLE 4E)

$$F'_b = F_b \times \cancel{C_D}^{1.6} \times \cancel{C_m}^{1.0} \times \cancel{C_L}^{1.0} \times \cancel{C_t}^{1.0} \times \cancel{C_i}^{1.0} \times \cancel{C_f}^{1.0} \times \cancel{C_F}^{1.10} \times \cancel{C_r}^{1.0\,(\text{INCL})} \times \cancel{C_{fu}}^{1.0\,(\text{INCL.})} \times \cancel{C_H}^{1.0} \times \cancel{C_c}^{1.0}$$

C_D = 1.6 (CONSERVATIVE)

F'_b = 1650 PSI × 1.6 × 1.10

= 2904 PSI

$f_b = \frac{M}{S}$ M FROM ANALYSIS = 251 LB-FT = 3012 LB-IN

$S = 2.8125\ IN^3$

$= \frac{3012\ LB\text{-}IN}{2.8125\ IN^3}$

= 1071 PSI

$f_b < F'_b$ ∴ DECKING IS SUFFICIENT FOR 85 PSF PEDESTRIAN LL.

CHECK MIDSPAN DEFLECTION:

$\delta_{\mathcal{L}}$ = 0.551 IN [ANALYSIS]

δ_{ALLOW} = 6'(12"/)/240 = 0.300"

$\delta_{\mathcal{L}} > \delta_{ALLOW}$, THEREFORE PEDESTRIAN LIVE LOAD EXCEEDS PERMISSIBLE LIMITS.

benesch engineers · scientists · planners	Comp. by: D. KRELL	Date: 12/20/13	Sheet 2 of 2
	Chkd. by: WJL	Date: 1/6/2014	Job No. 20175.00
	Project: HOYT PARK BRIDGE - TIMBER PLANK		
	Element: ALLOWABLE PEDESTRIAN LOAD		

85 PSF LIVE LOAD PRODUCES EXCESSIVE DEFLECTION, THEREFORE DETERMINE LOAD THAT WILL PRODUCE ALLOWABLE DEFLECTION.

$\delta_{ALLOW} = 0.300''$

$$\delta = \frac{5wl^4}{384EI} \Rightarrow w = \frac{\delta_A(384EI)}{5l^4}$$

$E = 1400$ KSI $\quad I = 2.11$ IN^4

$l = 6' = 72'' \quad \delta_A = 0.300$ IN

$$w = 0.300\text{ IN}\,(384)(1400000\text{ PSI})(2.11\text{ IN}^4) / (5(72\text{ IN})^4)$$

$= 2.53$ LB/IN $\times$ 12"/'

$= 30.39$ LB/FT

DL BOARD $= 35$ PCF $\times \dfrac{1.5'' \times 7.5'}{144} = 2.73$ LB/FT

$w_{LL} = 30.39$ LB/FT $- 2.73$ LB/FT

$= 27.66$ LB/FT

CONVERT TO PSF $\quad q_{ALL} = 27.66$ LB/FT $/ (7.5$ IN $/ 12''/')$

$= 44.26$ PSF

ALLOWABLE PED LIVE LOAD IS $\approx$ <u>44 PSF</u>

benesch engineers · scientists · planners	Comp. by: WSR	Date: 1/24/2014	Sheet 1 of 2
	Chkd. by: DAK	Date: 1/28/2014	Job No. 20175
	Project: Hoyt Park Bridge		
	Element: Staging For Floorbeam Replacement		

Compute Feasability of removing and replacing one FB at a time

- FB span = 9'-3" *2 = 18.5'

- Assume simple span for bending (approx. end spans)

- DL's on Stringer Only (ie access from lift equipment below)

Dist Loads:

Deck: $0.166' \left(\frac{7'}{2}\right)(60^{\#}/ft^3) = 35^{\#}/ft$ CONSERVATIVE ✓

Stringer Self Wt: $\left[\overset{\text{MAIN}}{0.5'(1.5')} + \overset{\text{middle (100\%)}}{0.33'(0.66')}\right](60^{\#}/ft^3) = 60^{\#}/ft$

$\Sigma = 95^{\#}/ft$

Point Loads: Railing Post: $0.833'(0.833')(5.0')(60^{\#}/cf) = 210^{\#}$

Railings: $9.25'(0.25')(0.4166')(2)(60^{\#}/cf) = 116^{\#}$

Floorbeam: 4x4H – $13.8^{\#}$ – $\frac{13.8^{\#}(11')}{2} = 76^{\#}$

Say 100% bracing = $76^{\#}$

$\Sigma = 478^{\#}$

(1) DOUG-FIR: 35-40 PCF

benesch engineers · scientists · planners	Comp. by: WJZ	Date: 1/24/2014	Sheet 2 of 2		
	Chkd. by: DAK	Date: 1/28/2014	Job No. 20175		
	Project:				
	Element:				

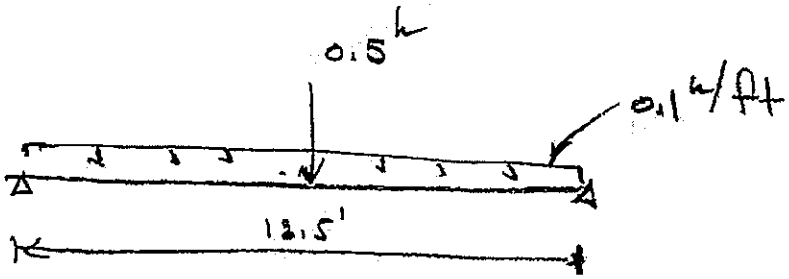

Dead Loads on Stringer

$$M = \frac{0.10^{k}/ft\,(18.5')^2}{8} + \frac{0.5^{k}\,(18.5')}{4} = 6.6'^{k}$$

$$= 80''^{k}$$

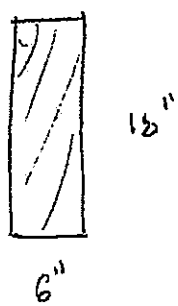

$$I = \frac{6''(18'')^3}{12} = 2916\ in^4$$

$$S = \frac{2916\ in^4}{9''} = 324\ in^3$$

$$f_b = \frac{80^{k}}{324\ in^3} = 0.25\ ksi = \underline{250\ psi}$$

very low

ok

DFL F_b = 825 - 1,600 PSI ← $F_b = 1650\ psi$ (unmodified)

BEAM & STRINGER

DEPENDING ON GRADE SEE ATTACHED.

Can remove & replace FB's using aerial access equipment from the ground below. ✓

Table 4D (Cont.) Reference Design Values for Visually Graded Timbers (5" x 5" and larger)[1,3]

(Tabulated design values are for normal load duration and dry service conditions, unless specified otherwise. See NDS 4.3 for a comprehensive description of design value adjustment factors.)

USE WITH TABLE 4D ADJUSTMENT FACTORS

Species and commercial grade	Size classification	Design values in pounds per square inch (psi)							Grading Rules Agency
		Bending F_b	Tension parallel to grain F_t	Shear parallel to grain F_v	Compression perpendicular to grain $F_{c\perp}$	Compression parallel to grain F_c	Modulus of Elasticity E	Modulus of Elasticity E_{min}	
DOUGLAS FIR-LARCH (NORTH)									
Select Structural	Beams and Stringers	1,600	950	170	625	1,100	1,600,000	580,000	NLGA
No.1		1,300	675	170	625	925	1,600,000	580,000	
No.2		875	425	170	625	600	1,300,000	470,000	
Select Structural	Posts and Timbers	1,500	1,000	170	625	1,150	1,600,000	580,000	
No.1		1,200	825	170	625	1,000	1,600,000	580,000	
No.2		725	475	170	625	700	1,300,000	470,000	
DOUGLAS FIR-SOUTH									
Select Structural	Beams and Stringers	1,550	900	165	520	1,000	1,200,000	440,000	WWPA
No.1		1,300	625	165	520	850	1,200,000	440,000	
No.2		825	425	165	520	550	1,000,000	370,000	
Select Structural	Posts and Timbers	1,450	950	165	520	1,050	1,200,000	440,000	
No.1		1,150	775	165	520	925	1,200,000	440,000	
No.2		675	450	165	520	650	1,000,000	370,000	
EASTERN HEMLOCK									
Select Structural	Beams and Stringers	1,350	925	155	550	950	1,200,000	440,000	NELMA NSLB
No.1		1,150	775	155	550	800	1,200,000	440,000	
No.2		750	375	155	550	550	900,000	330,000	
Select Structural	Posts and Timbers	1,250	850	155	550	1,000	1,200,000	440,000	
No.1		1,050	700	155	500	875	1,200,000	440,000	
No.2		600	400	155	550	400	900,000	330,000	
EASTERN HEMLOCK-TAMARACK									
Select Structural	Beams and Stringers	1,400	925	155	555	950	1,200,000	440,000	NELMA NSLB
No.1		1,150	775	155	555	800	1,200,000	440,000	
No.2		750	375	155	555	500	900,000	330,000	
Select Structural	Posts and Timbers	1,300	875	155	555	1,000	1,200,000	440,000	
No.1		1,050	700	155	555	875	1,200,000	440,000	
No.2		600	400	155	555	400	900,000	330,000	
EASTERN HEMLOCK-TAMARACK (N)									
Select Structural	Beams and Stringers	1,450	850	165	555	950	1,300,000	470,000	NLGA
No.1		1,200	600	165	555	800	1,300,000	470,000	
No.2		775	400	165	555	500	1,100,000	400,000	
Select Structural	Posts and Timbers	1,350	900	165	555	1,000	1,300,000	470,000	
No.1		1,100	725	165	555	875	1,300,000	470,000	
No.2		650	425	165	555	600	1,100,000	400,000	
EASTERN SPRUCE									
Select Structural	Beams and Stringers	1,050	725	135	390	750	1,400,000	510,000	NELMA NSLB
No.1		900	600	135	390	625	1,400,000	510,000	
No.2		575	275	135	390	375	1,000,000	370,000	
Select Structural	Posts and Timbers	1,000	675	135	390	775	1,400,000	510,000	
No.1		800	550	135	390	675	1,400,000	510,000	
No.2		450	300	135	390	300	1,000,000	370,000	
EASTERN WHITE PINE									
Select Structural	Beams and Stringers	1,050	700	125	350	675	1,100,000	400,000	NELMA NSLB
No.1		875	600	125	350	575	1,100,000	400,000	
No.2		575	275	125	350	400	900,000	330,000	
Select Structural	Posts and Timbers	975	650	125	350	725	1,100,000	400,000	
No.1		800	525	125	350	625	1,100,000	400,000	
No.2		450	300	125	350	325	900,000	330,000	