CDM Camp Dresser & McKee

Report

Box #00000450125

Franklin Landfill O+M Manual

Contents

Section 8 Site Access and General Maintenance 8-1

8.1 Introduction 8-1
8.2 Grass Mowing 8-1
8.3 Snow Plowing 8-1
8.4 General Maintenance 8-1
8.4.1 Blower/Flare Station 8-1
8.4.2 Well Vaults and Wellheads 8-1

Section 9 Quarterly Monitoring 9-1

9.1 Introduction 9-1
9.2 Monitoring 9-1

Section 10 Troubleshooting 10-1

10.1 Introduction 10-1
10.2 Flare Will Not Stay Lit 10-1

List of Figures

Figure 1-1 Well Construction Detail

Figure 3-1 Gas Probe and Manhole #7 Locations

Figure 4-1 Gas Wells and Condensate Tank Locations

Figure 5-1 Blower/Flare Station Layout

List of Appendices

Appendix A LFG Specialties Blower/Flare Station Manufacturer's Literature

Appendix B LANDTEC GEM-500 Gas Monitor Manufacturer's Literature

Appendix C Miscellaneous Field Equipment Manufacturer's Literature

Appendix D LANDTEC Gas Wellhead Manufacturer's Literature

Appendix E Condensate Tank Manufacturer's Literature

Appendix F MMSD Condensate Disposal Permit

1 Section One

1.3 Gas Header

The gas header pipe conveys the vacuum from the blower out to the wells where the gas is pulled into the wells and up into the header system. The gas is then conveyed in the header back to the flare, where it is combusted. The gas header is located beneath the clay cap inside the limit of waste, and at least five feet below ground surface outside the limit of waste. Because condensate forms due to cooling of the gas once inside the header pipe, the pipe is sloped to drain liquid to one of six collection points. A double walled steel condensate tank is located at each of these low points. The condensate tanks are periodically checked for liquid level using a water level indicator. When needed, they are emptied using a tanker truck, which pumps the liquid out, then disposes it into a Milwaukee Metropolitan Sewerage District (MMSD) manhole, as discussed in more detail in **Section 7**.

1.4 Gas Monitoring Probes

There are 18 monitoring probes located around the perimeter of the landfill. These probes are monitored for methane concentration, oxygen concentration, carbon dioxide concentration and pressure. This procedure is discussed in more detail in **Section 3**.

2 Section Two

It is important that these gauges be replaced periodically as landfill gas may affect the accuracy and reliability of these instruments. See **Appendix C** for manufacturer's literature.

2.4 Flow Measuring Instrument

Measurement of LFG flow to the flare is done at the sample port on the 8" header riser just before the blower using a pitot tube or other flow measuring instrument, such as a Velometer. Pitot tubes are available through Dwyer. Electronic flow measuring devices may also be used; however, accuracy of these devices is affected by changes in gas composition and gas moisture content.

2.5 Water Level Indicator

A water level indicator is used to determine the liquid level at the gas extraction wells and condensate tanks during quarterly monitoring. Water level indicators are available from many manufacturers such as Solinist and Herron. Any water level indicator purchased for use on the Landfill should be at least the length of the deepest well to be monitored. A 100 foot length has been used and proved to be more than adequate.

2.6 Sample Tubing and Connectors

Plastic tubing and coupling connectors are used in conjunction with most of the sampling equipment. Typically 1/4" teflon tubing is used. Plastic connectors compatible with those on the wellhead assemblies may be purchased through Colder Products Company (CPC). Male sample ports are currently on the wellhead assemblies (CPC stock # PLC 220-04), the flare (header riser) sample port (CPC stock # PLCD 240-06), and the gas probes. Therefore, the connector used for monitoring is a female coupling connector (CPC stock # PLC 170-04). See **Appendix C** for manufacturer's literature.

2.7 Miscellaneous Equipment / Hand Tools

In addition to the previously mentioned equipment which is used often during landfill monitoring, some additional items are required for less common activities. The following items are highly recommended for O&M activities at the Milwaukee County Landfill:

- Screwdrivers - Used for opening blower/flare control panel and removing wellhead caps.
- Open-end Wrenches -Used for removing sample port on header riser (for flow measurements), and replacing sample ports on wellheads.
- Razor Knife -Used for cutting sample tubing.
- Knee Pads -Used for kneeling during well monitoring (extremely useful)
- Bucket and Funnel - Used for transporting and pouring condensate from blower/flare knockout pot to condensate tank.
- Manhole Pick -Used for opening manhole lids on vaults.

3 Section Three

4 Section Four

9. Remove the sampling connection from the sampling port.

10. Using the 0 to 1.0 i.w.c. or the 0 to 2.0 i.w.c. magnahelic (depending on the pressure of the well), measure and record the static, impact and system pressures. This is done by attaching the sample hose of the pressure reading instrument (magnahelic), to the male sample ports at the top of the manhole corresponding to the wellhead sample ports labeled "STATIC", "IMPACT", and "SYSTEM" respectively. (Be sure the magnahelic is held appropriately so the needle is at zero before attaching the hose to the sample port.) The pressure measurement feature of the LANDTEC GEM-500 may also be used to measure pressure.

11. Remove the sampling connection from the sample port.

12. Compare the current gas readings to the previous gas readings to determine if the gas flow should be changed or not. See the Accu-Flo Wellhead Installation and Operation Manual provided in **Appendix D** for information on balancing/adjusting rationale.

13. Adjust the gas flow from the well by opening or closing the ball valve at the top of the well. At no time should the valve be set to fully closed. Rather, leave the valve "cracked open" to maintain a slight gas flow from the well.

14. Place the manhole cover back on top of the vault.

5 Section Five

9. Prepare the landfill gas monitor for monitoring and connect it to the male sample port on the header riser.

10. Determine the percentage of methane (CH_4), carbon dioxide (CO_2), and oxygen (O_2) using the landfill gas monitor.

11. When the gas readings become constant, typically after 50 to 100 seconds, record the gas levels (as percentages) and remove the connection from the sampling port.

12. Read the gage mounted on the blower measuring the incoming pressure. Record the value as P_{IN}.

13. Read the gage mounted on the blower measuring the outgoing pressure. Record the value as P_{OUT}.

14. Record the level of propane in the propane storage tank. Call Amerigas (414-774-1160) to order a refill when the propane level is approaching 35%. The propane tank should always be maintained at or above 35%.

15. Empty the knockout pot into a bucket, if needed, and record the approximate amount of condensate removed. Empty the bucket into the middle 2" riser of condensate tank #5 using a funnel. (BE SURE TO POUR THE LIQUID INTO THE TANK AND NOT THE INTERSTICIAL SPACE OF THE TANK!)

16. Empty the condensate from the base of the flare, if needed, and record the approximate amount removed. Empty the bucket into the middle 2" riser of condensate tank #5 using a funnel. (See above.)

5.2.2 Quarterly Monitoring

In addition to the activities conducted and information obtained during periodic monitoring (as described above), the following activities should be conducted during the quarterly monitoring of the landfill:

1. Record the settings of the ignition timer, pilot timer, and the down timer (inside the control panel).

2. Determine the gas flow rate of the system by doing the following steps.

3. Remove the sampling port on the 8" header riser using a 5/8" wrench.

4. Insert a Pitot tube (or other gas flow measuring device) into the pipe and take readings across the pipe at 2" intervals, beginning just inside the pipe and finishing at the far edge, for a total of 5 readings.

5. Replace the sampling port on the header riser using a 5/8" wrench. Do not over tighten.

6. Remove the threaded plug from the top of the 4" pipe that extends between the blower and the flare using a 1/2" wrench.

7. Insert a Pitot tube (or other gas flow measuring device) into the pipe and take readings across the pipe at 1" intervals, beginning just inside the pipe and finishing at the far edge, for a total of 5 readings.

8. Replace the threaded plug using a 1/2" wrench.

9. Calculate the gas flow based on the readings obtained and the corresponding pipe diameter.

6 Section Six

7

Section Seven

6. Monitor and record liquid levels (even if zero) in all six tanks.

7.4 Condensate Sampling and Testing

Prior to emptying the tanks, the condensate must be sampled and tested in accordance with the requirements of the MMSD permit included in **Appendix F.** To date, this has been done by S-F Analytical Lab in Milwaukee. The contact person is Mark Durr, who can be reached at (414)475-6700. Due to the depth of tank and diameter of the risers, the sampling is typically done using a hose and pump to obtain the sample. The results of the sampling are then conveyed to MMSD in accordance with the permit. Provisions must be made to unlock the riser cap or to temporarily provide a key to the sampler.

7.5 Condensate Removal

The condensate is removed from the tanks by pumping it into a tanker truck and disposing it into MMSD Manhole No. 7, located to the north of the ski hill as shown on **Figure 3-1.** As stated in the MMSD permit, at least 48 hours notice must be given to MMSD prior to discharge of condensate into an MMSD manhole. Provisions must be made to unlock the riser cap for condensate pumping. A letter must be sent to MMSD indicating the amount of liquid disposed in the manhole, the date of disposal, and the sampling results from the condensate testing.

7.6 Liquid in Condensate Tank Interstitial Space

The condensate tanks were inspected by the manufacturer prior to and during installation. The tanks are warrantied for a period of one year following construction. If liquid is detected inside the interstitial space of a tank, there may be one of several causes:

- Moisture condensing inside the space
- Leakage of condensate from inside the tank
- Leakage of liquid from the landfill through a hole in the outside wall
- Leakage of moisture through the riser fitting at the top of the tank

If there is very little liquid detected, and it does not increase over time, it is likely that this is moisture condensing inside the interstitial space. In this case, the interstitial space may be pumped dry if necessary, and thoroughly dried either by blowing dry air through the space or by putting a moisture removing liquid such as isopropyl alcohol into the space to completely dry the space. Lannon Tank, the tank manufacturer should be contacted for an acceptable method, if necessary.

If the liquid is increasing or is replaced soon after pumping the space dry, a leak of some type may be present. If the liquid is at the same level as the condensate inside the tank, that is an indication that the liquid in the interstitial space may be LFG condensate. A leak check can be done by removing the condensate in accordance with the MMSD permit, and pressure testing the tank and the interstitial space individually. Should a leak be detected, the tank manufacturer should be contacted for assistance in evaluating the most effective remedy.

8 Section Eight

9

Section Nine

10

Section Ten

Other reasons the flare might not light include a burned out valve actuator, broken fuse, or other mechanical item needing repair or replacement. For these issues, it is recommended to consult the manufacturer's O&M manual, or call LFG Specialties directly for consultation.

Figures

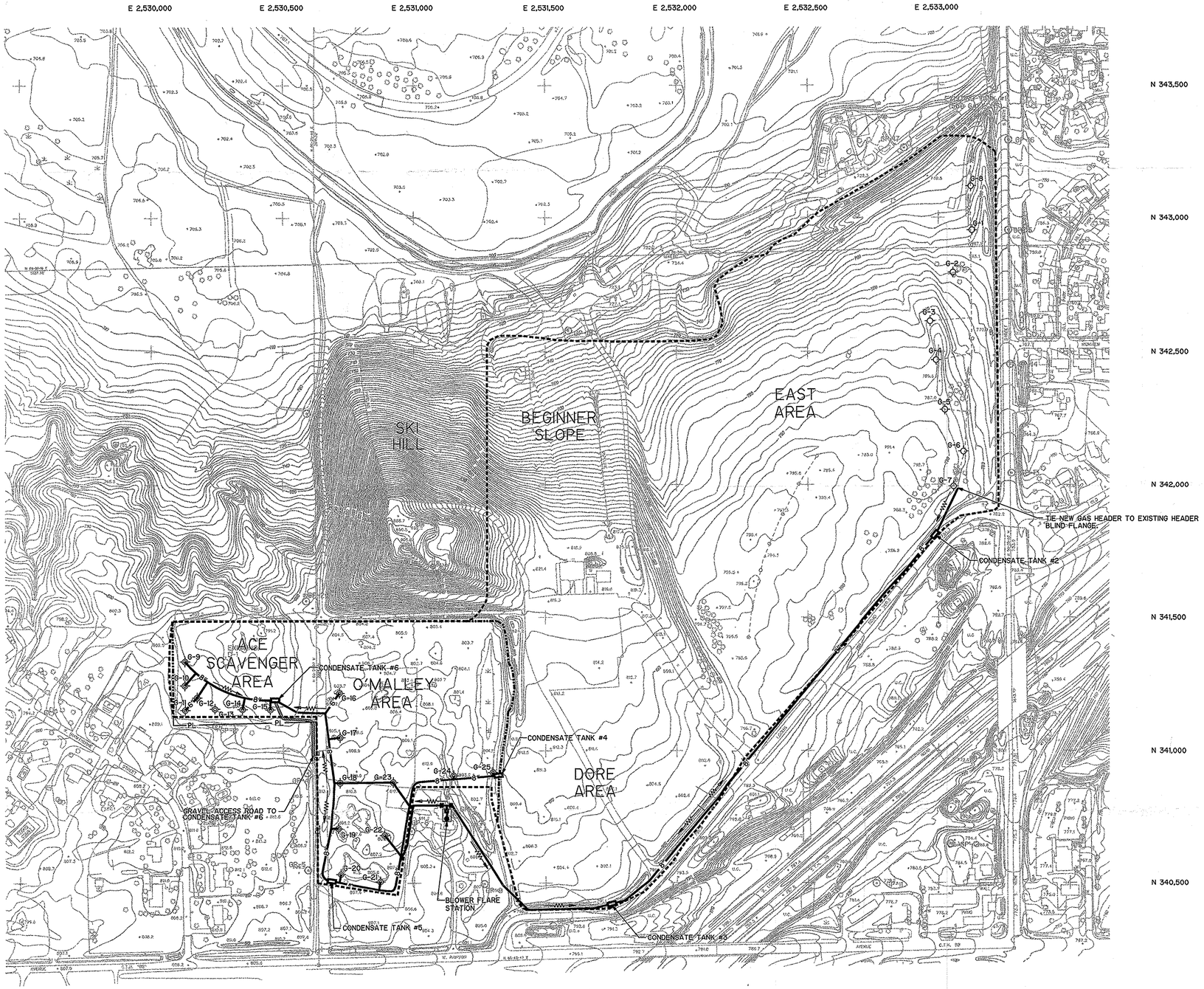

N

1" = 200'

100 0 200

1. EXISTING TOPOGRAPHIC MAP SHOWN WAS PREPARED BY AERO-METRIC ENGINEERING, INC. DATE OF PHOTOGRAPHY, APRIL 26, 1993.
2. ELEVATIONS SHOWN ARE BASED ON U.S.G.S. MEAN SEA LEVEL DATUM.
3. HORIZONTAL DATUM BASED ON WISCONSIN STATE PLANE COORDINATE SYSTEM.
4. THE APPROXIMATE LIMIT OF WASTE WAS DETERMINED FROM MILWAUKEE COUNTY RECORDS AND THE REPORT ENTITLED "PHASE I AND PHASE II ENVIRONMENTAL SITE ASSESSMENTS, OLD FILL AREA", PREPARED BY RMT, INC. AUGUST, 1991.

LEGEND

GP-1	EXISTING GAS MONITORING PROBE
G-1 D-1	EXISTING GAS EXTRACTION WELL
—ww—	CONDENSATE FLOW DIRECTION
	CONDENSATE STORAGE TANK & LOADOUT STATION
G-35	PROPOSED ACTIVE GAS EXTRACTION WELL
	PROPOSED BURIED BUTTERFLY VALVE
8"	PROPOSED SDR 17 HDPE GAS HEADER AND SIZE
	APPROXIMATE LIMIT OF WASTE
	LIMIT OF NEW FINAL COVER CONSTRUCTION
—PL—	PROPERTY LINE

MILWAUKEE COUNTY DEPARTMENT OF PUBLIC WORKS
ENVIRONMENTAL SERVICES DIVISION
COURTHOUSE ANNEX 907 NORTH 10TH STREET MILWAUKEE, WISCONSIN 53233

REVISIONS:

CHECKED BY: S. WINNEN

SCALE: 1" = 200'

DATE: FEBRUARY 1998

CAMP DRESSER & MCKEE INC. CDM environmental engineers, scientists, planners & engineers

PROJECT TITLE: MILWAUKEE COUNTY LANDFILL

SHEET DESCRIPTION: FIGURE 3-1

PROJECT NO.

SHEET NO.

FILE NO.

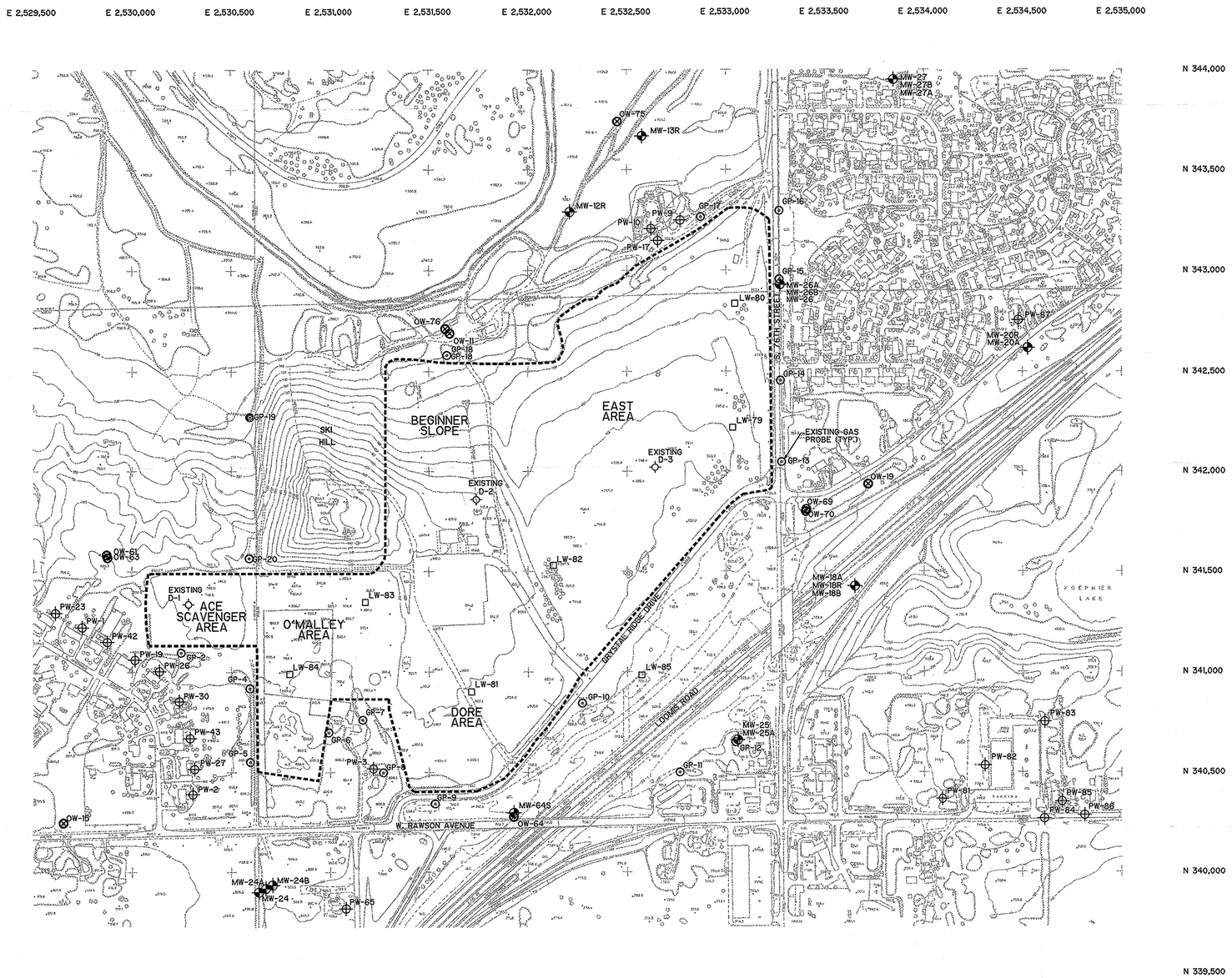

N

1" = 300'

150 0 300

NOTES:

1. TOPOGRAPHIC MAP SHOWN WAS PREPARED BY AERO-METRIC ENGINEERING, INC. DATE OF PHOTOGRAPHY, APRIL 26, 1993.
2. ELEVATIONS SHOWN ARE BASED ON U.S.G.S. MEAN SEA LEVEL DATUM.
3. HORIZONTAL DATUM BASED ON WISCONSIN STATE PLANE COORDINATE SYSTEM.
4. THE APPROXIMATE LIMIT OF WASTE WAS DETERMINED FROM MILWAUKEE COUNTY RECORDS AND THE REPORT ENTITLED "PHASE I AND PHASE II ENVIRONMENTAL SITE ASSESSMENTS, OLD FILL AREA", PREPARED BY RMT, INC. AUGUST, 1991.

LEGEND

- APPROXIMATE LIMIT OF WASTE
- D-1 EXISTING GAS WELL
- GP-1 EXISTING GAS PROBES
- MW-18B GROUNDWATER MONITORING WELL
- LW-81 LEACHATE WELL
- PW-82 PRIVATE DRINKING WATER WELL
- OW-19 OLD WELL

MILWAUKEE COUNTY DEPARTMENT OF PUBLIC WORKS
ENVIRONMENTAL SERVICES DIVISION
COURTHOUSE ANNEX 907 NORTH 10TH STREET MILWAUKEE, WISCONSIN 53233

REVISIONS:

CHECKED BY: S. WINNEN

SCALE: 1" = 300'

DATE: FEBRUARY 1998

CAMP DRESSER & MCKEE INC. CDM

PROJECT TITLE: MILWAUKEE COUNTY LANDFILL

SHEET DESCRIPTION: FIGURE 4-1

PROJECT NO.

SHEET NO.

FILE NO.

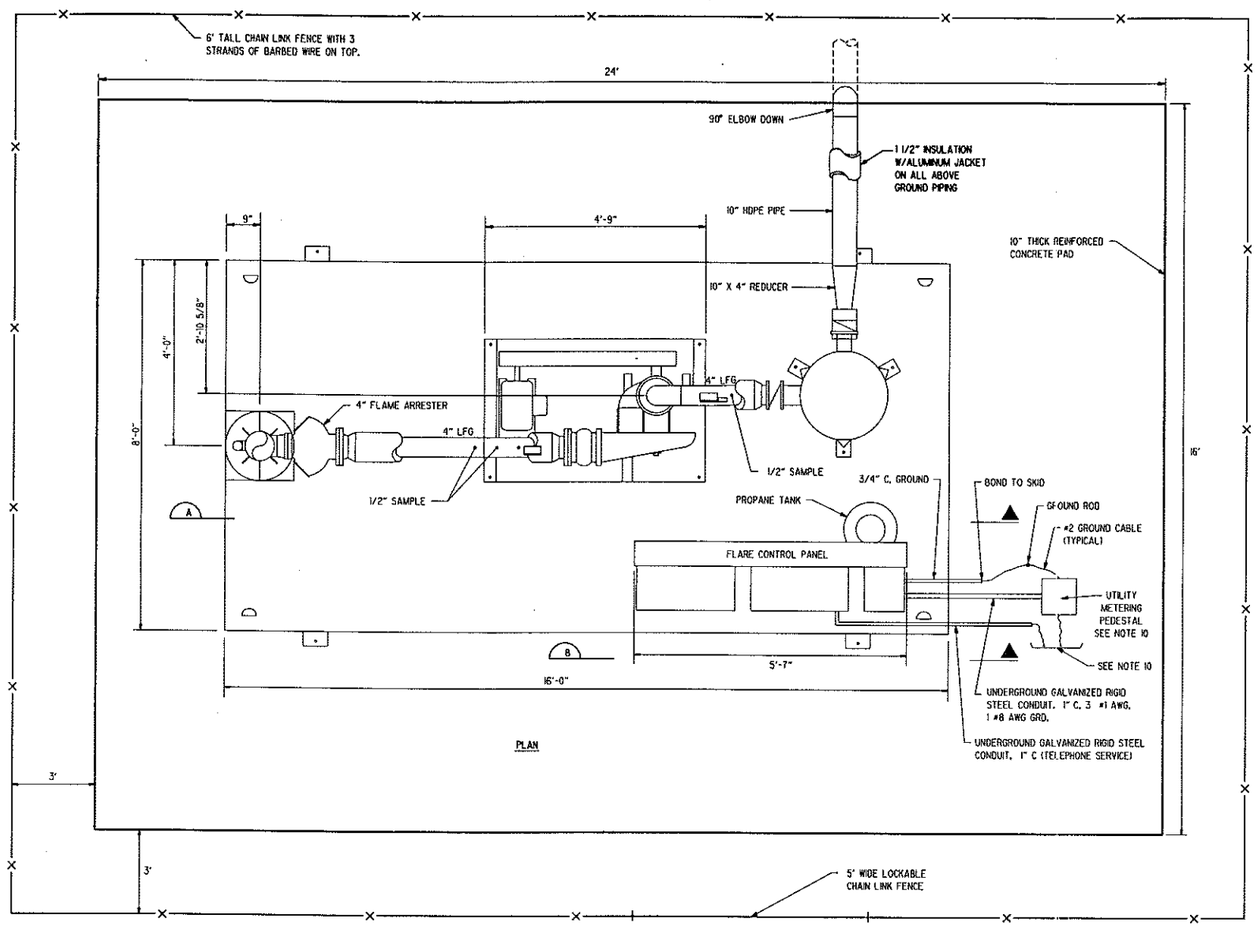

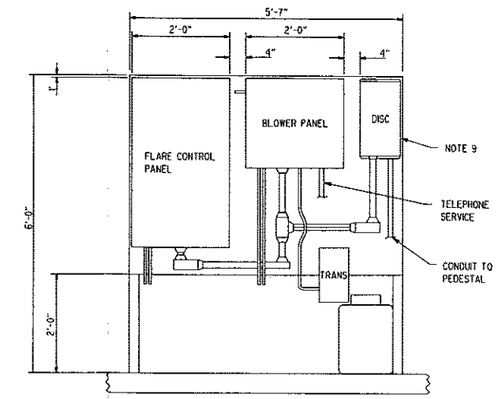

SECTION B
NTS

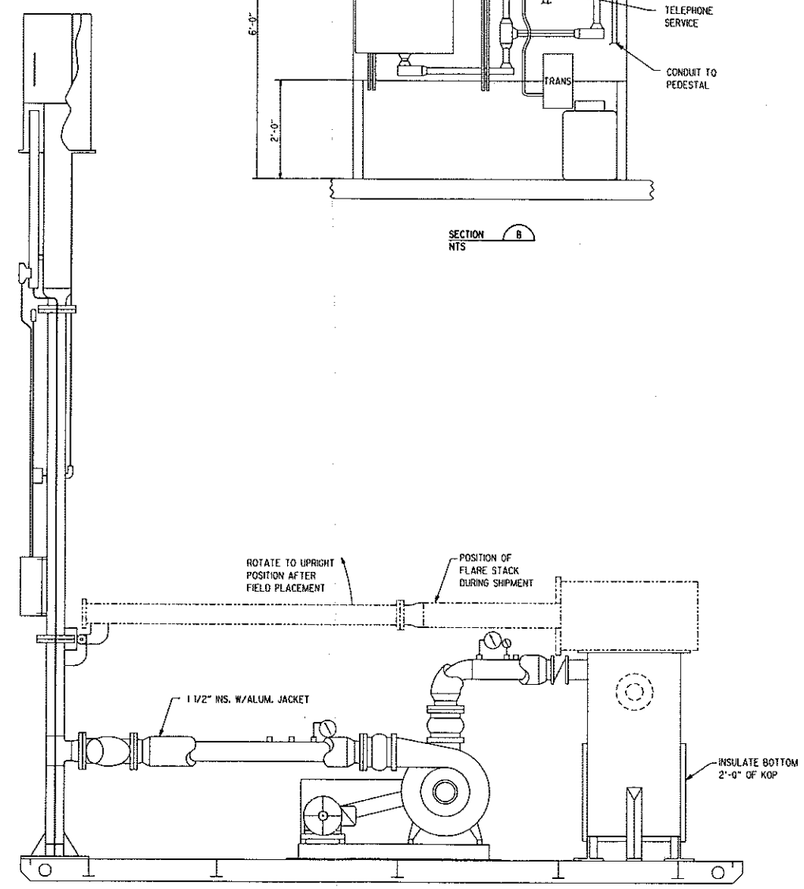

SECTION A
NTS

NOTES:

1. BLOWER/SKID DRAWINGS PROVIDED FROM MANUFACTURER SHOP DRAWINGS FOR CONTRACTOR INFORMATION ONLY. MANUFACTURER INFORMATION IS AVAILABLE FROM LFG SPECIALTIES, CLEVELAND, OH.
2. ALL WORK INVOLVING BLOWER, FLARE, OR SKID SHALL BE SUPERVISED BY MANUFACTURER'S REPRESENTATIVE. CONTRACTOR SHALL COORDINATE AND PAY FOR SERVICES OF MANUFACTURER. MANUFACTURER SHALL PROVIDE 2-YEAR EXTENSION OF BLOWER/FLARE SKID WORKMANSHIP AND MATERIAL WARRANTY.

FIGURE 5-1
BLOWER/FLARE STATION LAYOUT

Appendix A

LFG SPECIALTIES, INC.

OPERATION AND MAINTENANCE MANUAL

LANDFILL GAS PORTABLE FLARE STATION

MILWAUKEE COUNTY LANDFILL

FRANKLIN, WISCONSIN

Main Office

7550 Lucerne Drive
Suite #110
Cleveland, Ohio 44130
216/891-0305 FAX: 216/891-8288

Plant

705 Friendship Drive
P.O. Box 332
New Concord, Ohio 43762
614/826-7686 Fax: 614/826-4948

LFG SPECIALTIES, INC.

LFG SPECIALTIES, INC.

OPERATION AND MAINTENANCE MANUAL

for

PORTABLE FLARE STATION
MODEL NO. PCF6161 4
SERIAL NO. 1274

Installation:

MILWAUKEE COUNTY LANDFILL
7900 CHRISTAL RIDGE DRIVE
FRANKLIN, WISCONSIN

Date:

MARCH 1995

Main Office

7550 Lucerne Drive
Suite #110
Cleveland, Ohio 44130
216/891-0305 FAX: 216/891-8288

Plant

705 Friendship Drive
P.O. Box 332
New Concord, Ohio 43762
614/826-7686 Fax: 614/826-4948

Printed on Recycled Paper

LFG SPECIALTIES, INC.

INDEX

SECTION I — PORTABLE FLARE STATION, PROPOSAL NO. 129406-A
- Utility Flare Model CF616I4
- Lamson Blowers Model 403-3-0-3850-GB
- Knock Out Pot Model KOP-24
- Controller Flame-Trol I
- Peripheral Equipment
- Technical Data
- Commercial
- Terms and Conditions

SECTION II — INSTALLATION, OPERATION AND SERVICE
- Portable Flare Station Installation
- Maintenance
- Start-up
- Operation
- Service Contacts
- Package Drawings

SECTION III — FLARE STACK & IGNITOR/PILOT SYSTEM
- Ignitor/Pilot System Description
- Pilot Gas Control Regulator
- Pilot Gas Solenoid Valve
- Spark Plug
- Ignitor Transformer
- Chromel-Alumel Thermocouple

SECTION IV — FLAME-TROL I
- Surge Arrester
- Panel Heater
- Ultraviolet Flame Detector Relay
- Ultraviolet Flame Scanner
- Temperature Controller
- Pilot Timer and Down Time Timer
- Panel Control Lights & Switches
- Security Light

SECTION V — SYSTEM PERIPHERAL EQUIPMENT
- Flame Arrester
- Main Header Valve & Valve Actuator
- Lamson Blower

Printed on Recycled Paper

LFG SPECIALTIES, INC.

PROPOSAL :

No. 129406-A

PRESENTED TO:

Milwaukee County Procurement Division
12200 West Wirth Street
Milwaukee, WI 53222

REFERENCE:

Skid Mounted Landfill Gas Flare Package

PRESENTED BY:

LFG SPECIALTIES
7550 Lucerne Drive Suite 110
Cleveland, OH 44130
(216) 891-0305

Date: December 29, 1994
Rev: February 8, 1995

LFG SPECIALTIES, INC.

PROPOSAL NO: 129406-A DATE: 2/8/1995

LFG Specialties, Inc. is pleased to submit this proposal to furnish the following equipment in response to your RFP (request for proposal).

I. Each 8 ft. wide x 16 ft. long, pre-engineered and fully assembled skid mounted portable landfill gas flare package, complete with 6 in. diameter x 18 ft. OAH utility flare, 1 motor driven blower, knock-out pot, interconnecting piping, valves, associated peripheral equipment, and controls; including the Flame-Trol I automatic flare controller.

This flare package is sized for the following conditions:

Flows

Design Range	100-500	SCFM
Maximum	590	SCFM
Minimum	59	SCFM

LFG (landfill gas)

Methane content	40-60	%
Supply temperature	100	°F
Supply pressure	8	in. W.C.

The flare package will be LFG Specialties, Model PCF616I4 and include the following standard equipment:

SKID

An 8 ft. x 16 ft. heavy-duty structural steel sub-base with non-skid floor plate welded over all open areas. The skid is constructed of I-beams and other materials sufficiently rigid to withstand all loading and hauling forces. All necessary bracing, mounting pads and piping supports are provided for proper equipment installation and alignment.

FLARE STACK

*** Constructed of 4 in. x 12 ft schedule 40 A-53 pipe

*** Self supporting base plate with support gussets, welded to the skid assembly

*** 4 in. 150# flanged LFG inlet connection

Printed on Recycled Paper

*** 2 in. NPT drain port with plug at base of stack

COMBUSTOR ASSEMBLY

*** 6 in. x 3 ft. 304 stainless steel burner tip flange connected to stack

*** Flame retainer, 304 stainless steel ribbing system in burner tip to produce optimum swirl, obtaining high efficiency mixing and holding the flame at the flare tip

*** 18 in. x 3 ft. 304 stainless steel windshield to retain flame at the flare tip and provide retention time for efficient combustion

*** 1 each 2 in. lifting eye, welded to tip at bottom of windshield for ease of raising stack during installation

IGNITOR ASSEMBLY

*** 2 in. diameter 304 stainless steel pilot tip with integral spark plug connection/housing

*** Spark plug ignitor, eliminates gap problems often incurred with straight rod type ignitors

*** 110/5,000V single pole transformer mounted in NEMA 4 enclosure

*** High temperature ignitor leads in ½ in. conduit

*** Pilot nozzle in ½ in. stainless steel pipe

*** Chromel-Alumel (type k) thermocouple in stainless steel thermal well to give pilot confirmation

*** Ultraviolet flame scanner to give flame confirmation and provide flare safety shutdown

PERIPHERAL EQUIPMENT - INCLUDED WITH UTILITY METHANE FLARE

*** 1 each 4 in. Protectoseal or equal all aluminum flame arrestor with clean-out cover to facilitate in place maintenance

*** 1 each 4 in. carbon steel wafer type butterfly with stainless steel disk, shaft, and neoprene seat. The header valve will have an automatic electric actuator with battery operated "fail safe" closing in case of a power failure. Battery packet includes a trickle charge unit

*** 1 each 10-gallon propane tank with pressure gauge and appropriate piping to the flare pilot

BLOWER

System will include 1 each Lamson Model 403-GB centrifugal blower driven by a 7.5 Hp, 3 phase, 230/460 VAC, 60 hertz, TEFC electric motor. Blower will provide a 500 SCFM gas flow at 30" W.C. inlet vacuum and 8" W.C. discharge pressure. Blower and motor will be assembled on a unitary base and include applicable belt, shaft and bearing guards

CONDENSATE KNOCK OUT POT (KOP)

A 24 in. diameter x 48 in. OAH LFG Specialties KOP with 150# flanged inlet and outlet connections. KOP to have:

*** Internal coating of hi-build vinyl to resist acidic condensate

*** External finish with rust resistant primer and industrial enamel color coat

*** Removable lid to facilitate inspection and repair of coating if necessary

*** Heavy duty gage glass liquid indicator

*** 2 in. drain connection piped to edge of skid

PIPING

Package will include interconnecting piping and valves between KOP, blower and flare as outlined in P&ID drawing to be provided:

*** Piping unless otherwise stated will be standard schedule 40 metal pipe with flanged connections for equipment and valving

*** Valves unless otherwise stated will be PVC butterfly type

*** Piping system to be fully supported employing base mountings and pipe stands

*** 3 each 3/4 in. NPT sampling ports, one upstream and two downstream of the gas blower

*** All gas header and condensate piping will be insulated

FLAME-TROL I
UTILITY FLARE CONTROL SYSTEM

The LFG Specialties Flame-Trol I is a technically advanced fully integrated, 100% automatic flare controller. The Flame-Trol I is specifically designed to provide the operator full flexibility to set or change any temperature and/or time setting utilized in the automatic operation of a utility "candle type" flare.

FEATURES OF THE FLAME-TROL I INCLUDE:

1) Ultraviolet Flame Scanner

   A) The ultraviolet scanner and associated controller provide flame confirmation and initiate "flare safety shutdown". Upon loss of flame, the scanner will automatically shutdown the blowers and close the automated header valve (if utilized). The flame scanner has a maximum response time of 4 seconds, providing almost immediate system shutdown.

   B) The scanner also provides a safety lockout on the start up of the blowers and opening of the header valve, until confirmation of the pilot flame.

2) Temperature controller which offers complete flexibility to set temperature points at which certain functions will be initiated. These functions are:

   A) "System shutdown", should the ultraviolet scanner fail to operate for any reason, the temperature controller will act as a back-up safety shutdown. Upon loss of temperature at the flare tip the controller will also automatically shutdown the system.

   B) "Blower on", When the pilot burner reaches the appropriate temperature, set by operator, to indicate the pilot is in fact burning, the controller starts the blower motor automatically.

   C) "Pilot off", After the blower has been started, the pilot remains burning until the temperature at the flare tip has reached the ideal burning temperatures as set by operator, and the Flame-Trol I shuts off the propane supply to the pilot.

   The system will then operate as long as there is any flame at the flare tip. The controller also features a constant L-E-D temperature read-out.

3) Pilot Timer and Pilot Failure Indicator

A) This timer begins the instant the ignition cycle begins. It is set by the operator at the maximum time required for the propane pilot to achieve the blower on temperature and the methane supply to be ignited. This time will typically be 2 to 3 minutes. At the end of this time, the propane supply valve will be closed and the pilot flame extinguished, if not already shut off by the temperature controller.

B) The pilot timer also controls the "pilot failure" function of Flame-Trol I. Upon initiation of the automatic ignition cycle this timer begins timing down. Should the pilot not achieve the "blower on" temperature (set in the pilot temperature controller) in the time set in the pilot timer, the entire system will be shut down. The "pilot failure" indicator light will then come on. The system will not attempt to automatically reignite until the pilot problem has been remedied. If it is determined that the propane supply has not been exhausted or another problem with the pilot system cannot be found, the operator may attempt automatic reignition by pushing the "reset" button.

4) Down Time Timer

A) If the methane supply to the flare tip has been exhausted or the flame is extinguished by wind or other causes, the blowers are automatically shut down and the down timer starts. This timer has a range of one second to 999 hours. The operator determines the length of time necessary to rejuvenate the methane supply and sets this timer accordingly. Once the timer has completed its cycle, the system will open the pilot valve and the ignitor will fire to automatically reignite the flare. The timer has an LCD display in effect when the system is in the "down time" function.

5) Ignitor Timer

A) The ignitor timer allows the operator to set the time the ignitor will spark during the ignition cycle. This allows for the adjustment of the spark duration to compensate for the distance of the propane supply from the flare; thus extending the life of the ignitor plug, transformer and other pilot components.

6) Manual/Auto Switch

A) The system also features a convenient manual/off/auto switch which allows the operator to completely bypass the automatic controls and operate the flare manually.

7) The Flame-Trol I is enclosed in a NEMA 4 "outdoor" weather proof enclosure, suitable for control rack/wall mounting.

A) "Indicator Lights", Mounted on the controller are indication lights for; power on, ignition on, pilot on, blowers on, flare safety shutdown.

B) Also, mounted to the controller is a 110V, 15A duplex outlet in a NEMA 5-20R receptacle box with covers.

8) Automatic phone dialer

The automatic phone dialer and alarm system will be Kaye, DiaLog Plus Model X7320 or equal. This system will monitor up to four (4) expandable to eight (8) input alarm conditions and has the capability of storing and dialing up to eight (8) different phone numbers. The system utilizes user-recorded voice alarm messages to specify the cause of the alarm and/or shutdown. Unit will be mounted in a NEMA 4 enclosure and installed on the flare control rack. System will require a telephone line at the flare station and will be capable of specifying the shutdown alarm condition, restart or lockout.

ADDITIONAL CONTROL EQUIPMENT

*** CONTROL RACK ***

The Flame-Trol I automatic flare controller, associated motor starters, main control power supply and pilot supply controls will all be mounted on a free standing control rack. The rack will be fabricated from 6 in. x 2 in. channel A-36, sandblasted and painted with rust resistant zinc oxide primer and overcoat of heavy duty industrial enamel.

The following will be fully mounted, piped and wired on the control rack:

*** Flame-Trol I automatic flare controller in NEMA 4 enclosure

*** 1 each automatic phone dialer installed in a NEMA 4 enclosure

*** 1 each 7.5 Hp induction motor starter, 3 pole, 230 VAC magnetic, full voltage type, with normally open holding circuit, manual reset and overload relay, installed in NEMA 4 enclosure, (for landfill gas blower motor)

*** 1 each AC ammeter on LFG blower motor circuit with 200% scale

*** 1 each run time hour meter on blower motor circuit

*** The main power panel for 230V, 3 phase, 60HZ power supply with solid copper neutral and ground bus connections, multi-pole circuit breaker with common trip, installed in a weatherproof enclosure

*** A 230V to 120V transformer with terminal board installed in a weatherproof enclosure

*** A 170W mercury vapor security light with photocell and on/off switch (shipped loose for field installation)

*** A 120V, 15A duplex outlet in a weatherproof NEMA 5-20R receptacle box with covers

*** Pilot gas control system including: strainer, pressure control regulator, pressure gauge with isolation valve, fail-close solenoid valve with manual override and main manual shut off valve

SHIPPING

The LFG Specialties portable flare station will be prepared for truck transport. The flare stack with tip will be lowered are fastened to the transport cradle for shipment. All openings are properly sealed to prevent moisture or other damage. All loose re-assembly items are boxed and attached to the skid.

Note: Milwaukee County reserves the right to review/inspect the package at LFG Specialties plant prior to shipment.

INSTALLATION

The LFG Specialties flare station is prepackaged and tested for ease of installation. Customer/purchaser installation responsibilities include preparation of an appropriately sized foundation/slab. The skid package is equipped with pre-drilled anchor bolt pads for mounting to the foundation/slab. Connection of piping, to include main gas header to inlet header, propane supply line, and condensate drain. Only other connection will be power supply to control rack/motor starters.

LFG Specialties will provide an installation engineer to raise the flare stack and reconnect the gas, propane and control piping and wiring. The installation engineer will then provide start up supervision and instruction to the appointed operator/s and check out all set points. This service is provided as outlined in the Commercial Section of this Proposal No. 129406-A .

TECHNICAL DATA

FLOW RATE

Maximum	590	SCFM
Minimum	59	SCFM

GAS COMPOSITION

40-60% CH_4, Remainder- CO_2, Air, Inerts

Temp/Pres: 100°F, 8 in. W.C.

FLARE SIZE

6 in. tip, 18 ft. OAH

DESTRUCTION EFFICIENCY

98.0% overall destruction of total hydrocarbons

Guaranteed to meet E.P.A. emission standards for landfill gas disposed in utility "candle type" flares.

TURNDOWN RATION

10:1 from maximum flow rate

WIND LOADS

Designed for 100 mph wind loading (per ASCE 7-88, Exp. C)

COMMERCIAL

LFG Specialties, Inc. hereby proposes to furnish the Equipment and Services as described in this Proposal No. 129406-A per the following and subject to the standard "Terms and Conditions of Sales" attached:

D. Equipment Warranty:

LFG Specialties guarantees the Equipment as outlined and specified in this Proposal No. 129406-A for the period of twenty-four (24) months from date of start-up.

Along with standard Material, Workmanship and Performance Warranties outlined in the standard "Terms and Conditions of Sales" attached, LFG Specialties guarantees the equipment to meet present E.P.A. emission standards when installed and operated in accordance with specified design conditions.

E. Start-up Assistance:

LFG Specialties will furnish an on site advisor during any aspect of the installation or start-up of our equipment deemed necessary by our Customers in accordance with our standard "Terms and Conditions of Sales". Included in the flare pricing is:

Portable Flare Station --- 2 days service time including travel and living expenses.

F. Field Service Rates and Availability

Additional field service time will be charged at $450.00 per day for service technicians and $660.00 per day for engineers, plus expenses. Associated travel, lodging, living, and miscellaneous expenses will be charged at actual costs.

Service personnel should be scheduled two weeks in advance for standard installation, start-up or service work. Service personnel are available on a 24 hour notice for emergency service requirements.

G. Scope of Work:

LFG Specialties will furnish all the Equipment and Services as outlined in this Proposal No. 129406-A. Equipment will be fully fabricated, painted and tested as described in proposal at LFG Specialties facility, New Concord, Ohio.

Any material/instrumentation that may be damaged in shipment will be removed, tagged and boxed separately for shipment and re-assembly in field.

This proposal only covers the supply of Equipment and installation advisory service as defined. The following items are not included or should be constructed to be included in LFG Specialties scope of supply.

* Construction drawings. LFG Specialties will provide general arrangement drawings which will outline field installation connections (location and size), foundation bolt layouts and loading data. All equipment layout, interconnect details and foundations are the responsibility of Customer or Customer's Representative.

* All installation and civil work including foundations, equipment erection, main and interconnecting piping and wiring including required equipment and materials are the responsibilities of Customer or Customer's Representatives.

* All permits/licenses required for installation and/or operation of the Equipment are the responsibility of Customer or Customer's Representatives. LFG Specialties will provide necessary manufacturers data on the equipment as required for permit/license applications.

* Compliance testing - All compliance/performance testing will be the responsibility of the Customer. LFG Specialties will have representative/s present for tests at Customer's request and expense. LFG Specialties fully guarantees the Equipment to meet E.P.A. emission standards when operated within the specified conditions.

LFG SPECIALTIES, INC.
TERMS AND CONDITIONS OF SALES

DEFINITIONS: Within these "Terms and Conditions of Sales" the term "Seller" shall mean LFG Specialties, Inc. The term "Purchaser" shall mean the person, municipality, firm, or corporation to whom this quotation is addressed. The term "Equipment" means those articles, materials, supplies, drawings, data, or other property or services described herein.

WARRANTIES

A. "Material and Workmanship Warranty": LFG Specialties Inc., the "Seller" warrants to the Purchaser that the Equipment of its own manufacture will be complete in all its parts, and for the Warranty Period specified, will under proper application and operation be free from defects in material or workmanship. The Seller warranty obligation shall be limited to the following:

   1) Replacement or repair of any Equipment or parts which under normal and proper operating conditions are found and confirmed defective and are returned to the Seller's works within the Warranty Period, transportation charges prepaid.

   2) Notwithstanding the above, the Seller shall have no obligation as a result of improper storage, installation, repairs or modifications not made by Seller, or as a result of removal, improper use or misapplication of the Equipment after it has been delivered to the Purchaser.

   3) Purchaser shall be responsible for freight charges in connection with the return or replacement of any defective Equipment or parts.

B. "Performance Warranty": The Seller warrants that the Equipment of its own manufacture, when shipped and/or installed, will operate within any performance characteristics which are expressly specified herein as a performance guarantee. Any performance characteristics indicated herein, which are not expressly stated as guarantees, are expected "but not guaranteed". Should Purchaser be required or desire to conduct a field compliance/performance test to verify any performance guarantee, such test will be conducted by Purchaser, at his expense. Seller may be requested to have a representative/s present to witness such test in which case Purchaser shall reimburse Seller for the time and expense of such representatives at the Seller's service rates then in effect at the time of the test. Purchaser shall give Seller fifteen (15) days written notice prior to the date Purchaser intends to commence such test.

C. "Warranty as to Equipment not made by Seller": Equipment, parts and accessories made by other manufacturers and supplied hereunder by the Seller are warranted only to the extent of the original manufacturer's warranty to the Seller.

D. "Except as outlined herein, and to Title, it is expressly agreed":

   1) **"That there is no implied warranty of merchantability, nor other Warranty, express, implied, or statutory, nor any affirmation of fact, or promise by the Seller with reference to the Equipment or parts thereof, or otherwise, which extends beyond the description of the Equipment as set forth herein, and**

   2) **that the Purchaser acknowledges that it is purchasing the Equipment solely on the basis of the commitments of the Seller expressly set forth herein."**

   3) **That the Seller shall have the sole and exclusive right to determine and confirm if warranties apply, and that in no event shall Seller's liability exceed the purchase price of the Equipment, less a reasonable charge for any utilization by Purchaser.**

INSTALLATION AND ERECTION

The Equipment shall be transported, installed on a foundation, and connected at the Purchaser's expense, unless otherwise expressly agreed herein. Upon request of Purchaser, Seller will furnish a field service representative to assist Purchaser during the installation, erection and start up of the Equipment and instruction of its personnel, for which the Purchaser shall pay the then-current published rates per day plus actual living and traveling expenses. A day shall mean any one eight (8) consecutive hour shift, or part thereof.

Purchaser shall pay one and one-half times the current hourly rate for any time in excess of eight (8) hours per day and for the first (12) hours worked on Saturdays and double the current hourly rate for Sundays, locally observed holidays, and any time working in excess of (12) hours per day. Travel, working and standby time and travel and living expenses shall be charged from the time the Seller's representative leaves his home base or other equivalent starting point until his return thereto.

The field service representative furnished by Seller will be qualified to assist in the installation, erection and start up of the Equipment, but it is understood and agreed that, should Purchaser utilize the field service representative in any manner as a foreman, supervisor, etc., that said representative shall become, for that purpose, the Purchaser's employee, for whom Purchaser shall be liable, shall maintain adequate insurance coverage and shall hold harmless and indemnify Seller from and against any and all claims arising out of said representative's acts or omissions while serving in such capacity.

DAMAGES

In no event shall the Seller be liable for special, consequential or incidental damages, nor for loss of anticipated profits nor for loss of use of the equipment or of any installation, system, operation or services into which the equipment or parts may be put, or with respect to which any service may be performed by Seller. This limitation on the Seller's liability shall apply to any liability for default under or in connection with the equipment, parts or services delivered hereunder, whether based on warranty, failure of or delay in delivery or otherwise.

CANCELLATION

Order shall not be subject to cancellation or modification, either in whole or in part, without the Seller's consent, and then only under terms that will reimburse the Seller for all applicable costs incurred, including but not limited, to costs of purchased materials, engineering and labor expenses, and a reasonable allowance for profit.

TITLES AND REMEDIES

Until full payment of all obligation by the Purchaser, the Seller reserves the title to all Equipment furnished hereunder. If the Purchaser defaults in payment or performance or becomes subject to insolvency, receivership, or bankruptcy proceedings or makes any assignment for the benefit of creditors, or without the consent of the Seller voluntarily or involuntarily sells, transfers, leases or permits any lien or attachment on the Equipment delivered hereunder, the Seller may treat all amounts then or thereafter owed by the Purchaser to be immediately due and payable and the Seller may repossess and Equipment by any means available under law.

CONFIDENTIALITY

All proposals, drawings, design data and technical information developed and/or provided by the Seller shall be considered "confidential" and the sole property of the Seller. All such information disclosed to the Purchaser shall not be reproduced in whole, or in part, or used to furnish information to others, without the written permission of the Seller.

PURCHASER'S DRAWINGS AND SPECIFICATIONS

Seller is furnishing only the Equipment specified herein and does not assume any responsibility for other equipment and material not being supplied by Seller, nor the effect thereof on the overall operation of the system of which the Equipment is a part. Accordingly, any comments from the Seller regarding Purchaser's drawings are responsive only and Seller shall not be liable therefor.

SELLER'S DRAWINGS AND ENGINEERING DATA

Prints of Seller's and data representing the Seller's application of the purchased equipment to the requirement of the contract will be submitted for approval. Upon the return of such prints, within ten (10) working days, the requested changes, if any, will be made to correct misinterpretations. Certified prints of Seller's drawings will then be furnished. Any Purchaser-requested changes thereafter will be subject to added cost and delivery considerations.

DESIGN CHANGES

While the Seller reserves the right where possible, to include changes in design or material which are improvements, it cannot be responsible for including improvements, effected after beginning of production on Equipment. Design changes suggested by Purchaser after beginning of production shall require Seller's agreement, including agreements as to price and shipping schedules.

MISCELLANEOUS

A. "Applicable Law" The definition of terms used, interpretation of this Agreement and rights of parties hereto shall be construed under and governed by the Uniform Commercial Code of the State of Ohio.

B. "Acceptance" If this proposal constitutes an acceptance of an offer, such acceptance is expressly made conditional on Purchaser's assent solely to the terms of this proposal, and acceptance of any part of the Equipment or services covered hereunder shall be deemed to constitute such assent.

C. This proposal is subject to change or prior sale of Equipment until accepted as an order by an officer of the Seller.

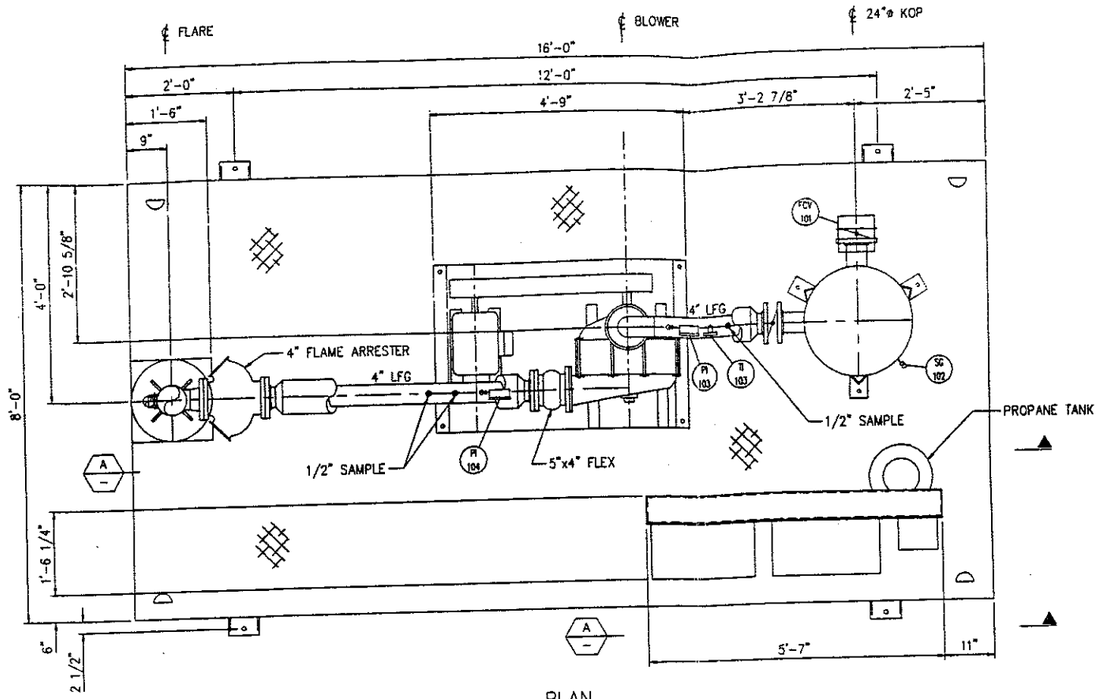

PLAN
SCALE: 3/4"=1'-0"

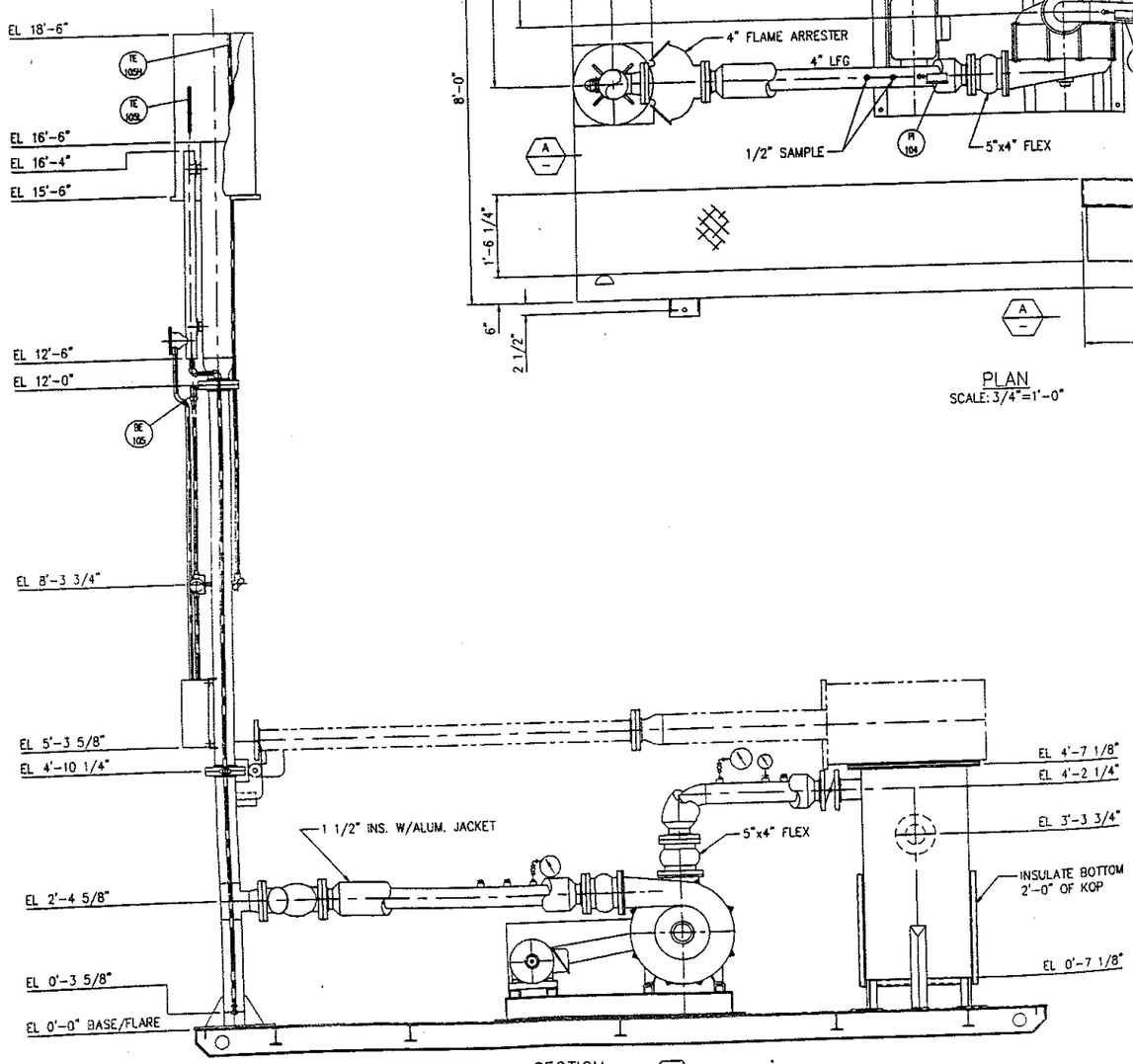

SECTION A
3/4"=1'-0"

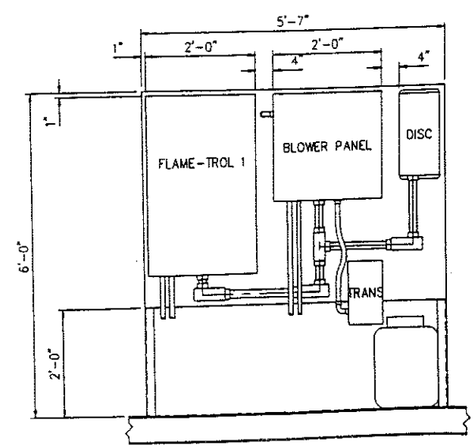

SECTION B
3/4"=1'-0"

C:\LFG\1274-1, 1/1" = 1'-0", 03/07/95 at 16:10

REV.	DESCRIPTION	DATE	BY
1	AS BUILT	03/07/95	PDK

This drawing and the information disclosed herein is the property of LFG SPECIALTIES, INC. and is not to be reproduced in whole or in part, or used to furnish information to others, without written permission from LFG SPECIALTIES, INC.

LFG SPECIALTIES, INC.
HEAD OFFICE
7550 LUCERNE DRIVE #110
CLEVELAND, OHIO 44130
(216) 891-0305
PLANT
705 FRIENDSHIP DRIVE
NEW CONCORD, OHIO 43762
(614) 826-7422

SCALE	AS NOTED
DATE	02/09/95
ENGINEER	P.D.K
DRAWN BY	P.D.K
APPROVED BY	
P.O. NUMBER	
PROJECT NUMBER	1274

TITLE: BLOWER / SKID GENERAL ARRANGEMENT PLAN, SECTIONS & DETAILS

PROJECT NAME: SKID MOUNTED LANDFILL GAS FLARE PACKAGE MILWAUKEE COUNTY LANDFILL

CUSTOMER: MILWAUKEE COUNTY

DRAWING NUMBER: 1274-1

LFG SPECIALTIES, INC.

HEAD OFFICE
7550 LUCERNE DRIVE #110
CLEVELAND, OHIO 44130
(216) 891-0305

PLANT
705 FRIENDSHIP DRIVE
NEW CONCORD, OHIO 43762
(614) 826-7422

DWG No.

1274-1
1274-2
1274-3
1274-4
1274-5
1274-6

LIST OF DRAWINGS

Blower / Skid General Arrangement, Plan, Sections & Details
Piping & Instrumentation Diagram
Blower Control Panel Layout And Electrical Schematic
FLAME-TROL I Panel Layout, Details & Bill Of Material
FLAME-TROL I Electrical Schematic
FLAME-TROL I Swing Out Panel (Rear View) Wiring Diagram

SKID MOUNTED
LANDFILL GAS FLARE PACKAGE
MILWAUKEE COUNTY LANDFILL

LEGEND

PIPING & INSTRUMENT LINE SYMBOLS

- FLOW DIRECTION
- MAIN FLOW
- SECONDARY FLOW
- PNEUMATIC SIGNAL
- ELECTRIC SIGNAL
- HYDRAULIC SIGNAL
- CAPILLARY TUBING
- ELECTROMAGNETIC (GUIDED)
- BOUNDARY
- SUPPLIED BY OTHERS

INSTRUMENT OR FUNCTION SYMBOLS

LOCALLY MOUNTED	PANEL MOUNTED FRONT	PANEL MOUNTED BACK	
TAG NO	TAG NO	TAG NO	INSTRUMENT
TAG NO	TAG NO	TAG NO	COMPUTER FUNCTION
TAG NO	TAG NO	TAG NO	PLC CONTROL

R RESET P PURGE I INTERLOCK

TAG NO TAG NO INSTRUMENTS SHARING COMMON HOUSING

ALARM HORN INDICATING LIGHT

VALVES, REGULATORS, AND OTHER DEVICES

- GATE VALVE
- ANGLE VALVE
- BALL VALVE
- GLOBE VALVE
- BUTTERFLY VALVE
- CHECK VALVE
- THREE WAY VALVE
- PLUG VALVE
- NEEDLE VALVE
- MANUALLY OPERATED VALVE
- S SOLENOID OPERATED VALVE
- P PNEUMATICALLY OPERATED VALVE
- M ELECTRIC MOTOR OPERATED VALVE
- DIAPHRAGM OPERATED VALVE
- PRESSURE RELIEF VALVE
- PRESSURE REDUCING REGULATOR
- PRESSURE REDUCING REGULATOR (SELF CONTAINED)
- BACK PRESSURE REGULATOR (SELF CONTAINED)
- FLANGED CONNECTION
- FLEXIBLE CONNECTION
- INSULATION
- REDUCER
- VENTURI TUBE
- FLOW STRAIGHTENER
- ORIFICE PLATE
- UNION
- STRAINER
- FLAME ARRESTER
- DAMPER (AUTOMATED)
- BLOWER OR PUMP

TABLE OF STANDARD IDENTIFICATION LETTERS

	FIRST LETTER	SECOND LETTER	THIRD LETTER	FOURTH LETTER
A	ANALYSIS	ALARM	ALARM	
B	BURNER, COMBUSTION	USER'S CHOICE		
C	CONNECTION	CONTROL	CONTROL	
D	DIFFERENTIAL	DIFFERENTIAL		
E	VOLTAGE	SENSOR	SENSOR	
F	FLOW RATE	USER'S CHOICE		
G	GAUGE	GLASS, VIEWING DEVICE		
H	HAND	USER'S CHOICE	HIGH	HIGH
I	CURRENT (ELECTRICAL)	INDICATOR		
J	POWER	USER'S CHOICE		
K	TIME	CONTROL STATION		
L	LEVEL	LIGHT	LOW	LOW
M	USER'S CHOICE	USER'S CHOICE		
N	USER'S CHOICE	USER'S CHOICE		
O	USER'S CHOICE	ORIFICE, RESTRICTION		
P	PRESSURE, VACUUM	POINT (TEST) CONNECTION		
Q	QUANTITY	INTEGRATE, TOTALIZE		
R	RADIATION	RECORDER		
S	SPEED, FREQUENCY	SAFETY	SWITCH	SWITCH
T	TEMPERATURE	TRANSMIT		
U	MULTIVARIABLE	MULTIFUNCTION	MULTIFUNCTION	MULTIFUNCTION
V	VIBRATION	VALVE, DAMPER, LOUVER	VALVE, DAMPER, LOUVER	
W	WEIGHT, FORCE	WELL		
X	UNCLASSIFIED	X AXIS	UNCLASSIFIED	UNCLASSIFIED
Y	EVENT, STATE	Y AXIS	RELAY, COMPUTE, CONVERT	
Z	POSITION, DIMENSION	Z AXIS	DRIVER, ACTUATE	

ABBREVIATIONS

AS	AIR SUPPLY	LFG	LANDFILL GAS
CONO	CONDENSATE	MCC	MOTOR CONTROL CENTER
CPLG	COUPLING	MS	MOTOR STARTER
CS	CARBON STEEL	PS	PIPE STAND/SUPPORT
ES	ELECTRICAL SUPPLY	PVC	POLYVINYL CHLORIDE
ESD	EMERGENCY SHUT DOWN	SC	SAMPLE CONNECTION
GS	GAS SUPPLY	SS	STAINLESS STEEL
HDPE	HIGH DENSITY POLYETHYLENE	WS	WATER SUPPLY
IAS	INSTRUMENT AIR SUPPLY		
KOP	KNOCK-OUT POT		

EQUIPMENT / INSTRUMENT LEGEND

TAG NO.	SERVICE	DESCRIPTION
FCV-101	LFG GAS	4" ELECTRIC FLOW CONTROL VALVE
SG-102	COND.	H.D. GLASS LEVEL GAGE
PI-103	LFG GAS	BLOWER INLET PRESSURE GAGE
TI-103	LFG GAS	BLOWER INLET TEMPERATURE GAGE
PI-104	LFG GAS	BLOWER DISCHARGE PRESSURE GAGE
BE-105	STACK	ULTRAVIOLET FLAME SCANNER
BSA-105	-	FLAME DETECTOR RELAY
TE-105L	STACK	PILOT THERMOCOUPLE, TYPE K
TE-105H	STACK	FLARE TIP THERMOCOUPLE, TYPE K
TIC-105	-	PILOT TEMPERATURE CONTROLLER
TSH-105	-	PILOT OFF RELAY, SOV-107 CLOSED
TSL-105	-	BLOWER ON RELAY
PCV-107	PROPANE	PROPANE GAS PRESSURE REGULATOR
PI-107	PROPANE	PROPANE GAS PRESSURE INDICATOR
SOV-107	PROPANE	PROPANE GAS SHUT-OFF SOLENOID VALVE

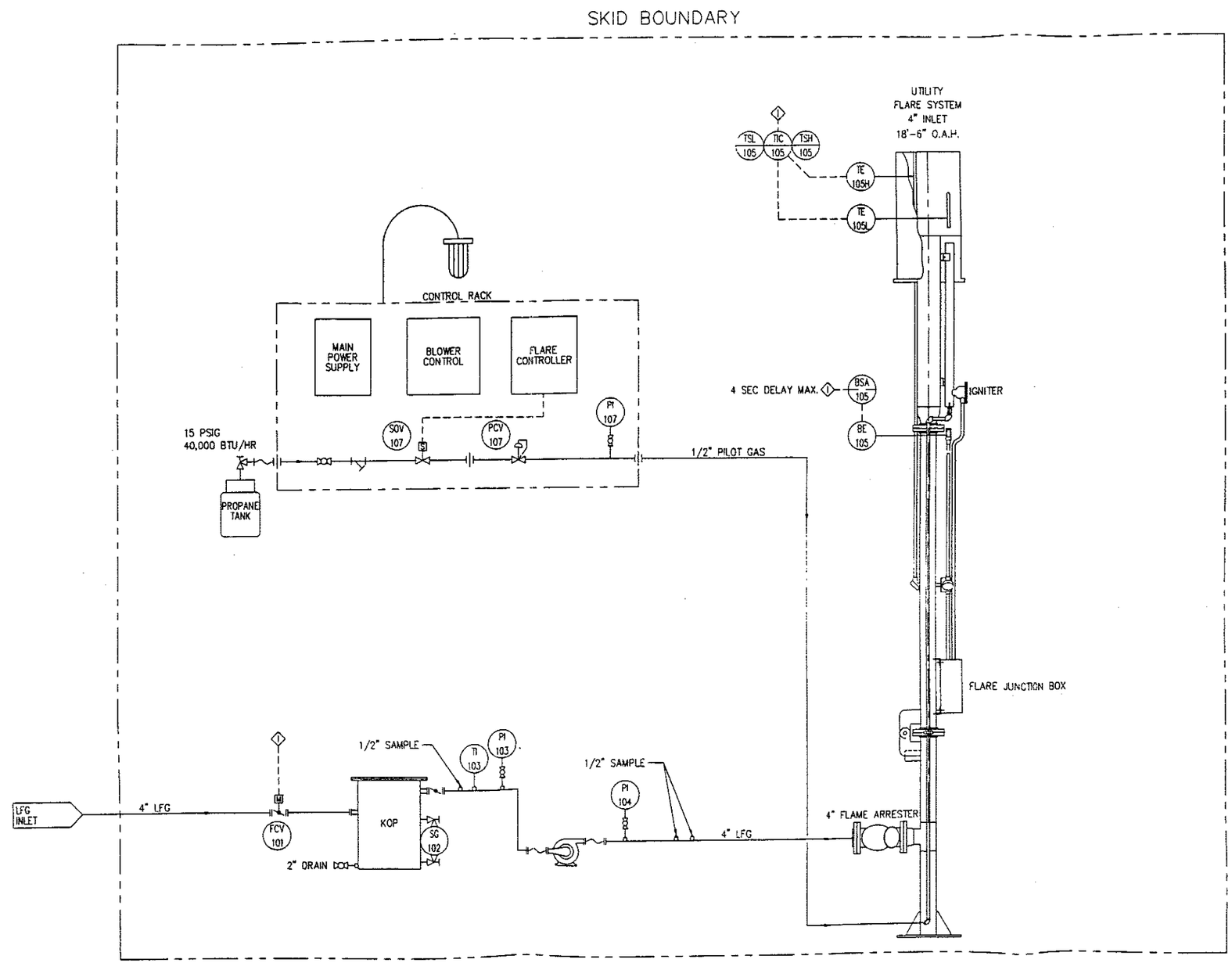

C:\LFG\1274-2, 12" = 1'-0", 03/07/95 at 14:23

REV.	DESCRIPTION	DATE	BY
1	AS BUILT	03/06/96	PDK

This drawing and the information disclosed herein is the property of LFG SPECIALTIES, INC. and is not to be reproduced in whole, or in part, or used to furnish information to others without written permission from LFG SPECIALTIES, INC.

LFG SPECIALTIES, INC.

HEAD OFFICE
7550 LUCERNE DRIVE #110
CLEVELAND, OHIO 44130
(216) 891-0305

PLANT
705 FRIENDSHIP DRIVE
NEW CONCORD, OHIO 43762
(614) 826-7422

TITLE: PIPING AND INSTRUMENTATION DIAGRAM

PROJECT NAME: SKID MOUNTED LANDFILL GAS FLARE PACKAGE

CUSTOMER: MILWAUKEE COUNTY LANDFILL

P.O. NUMBER:

SCALE: NONE
DATE: 02/14/95
ENGINEER: P.D.K.
DRAWN BY: P.D.K.
APPROVED BY:
PROJECT NUMBER: 1274

DRAWING NUMBER: 1274-2

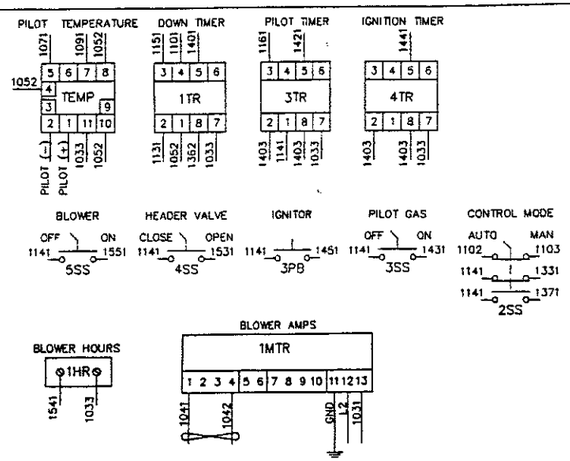

SWINGOUT PANEL WIRING (REAR VIEW)

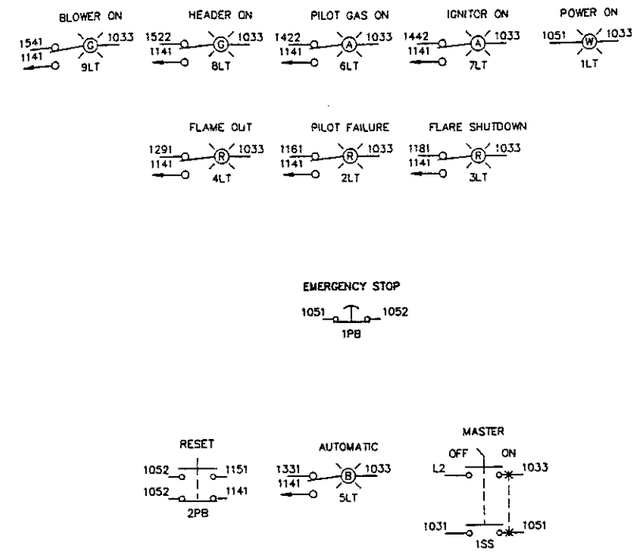

CONTROL ENCLOSURE DOOR WIRING (REAR VIEW)

REV.	DESCRIPTION	DATE	BY
A	AS BUILT	3/1/95	RCJ

This drawing and the information disclosed herein is the property of LFG SPECIALTIES, INC. and is not to be reproduced in whole, or in part, or used to furnish information to others, without written permission from LFG SPECIALTIES, INC.

LFG SPECIALTIES, INC.
HEAD OFFICE
7550 LUCERNE DRIVE #110
CLEVELAND, OHIO 44130
(216) 891-0305
PLANT
705 FRIENDSHIP DRIVE
NEW CONCORD, OHIO 43762
(614) 826-7422

TITLE: DOOR / SWING-OUT PANEL (REAR) WIRING DIAGRAM

PROJECT NAME: SKID MOUNTED LANDFILL GAS FLARE PACKAGE MILWAUKEE COUNTY LANDFILL

CUSTOMER: MILWAUKEE COUNTY

P.O. NUMBER

SCALE: N/A
DATE: 02/14/95
ENGINEER: JCK
DRAWN BY: RCJ
APPROVED BY: JCK
PROJECT NUMBER: 1274

DRAWING NUMBER: 1274-6

C:\LFG\1274-6, 1 : 1.000, 03/07/95 at 15:01

LF890803.DWG

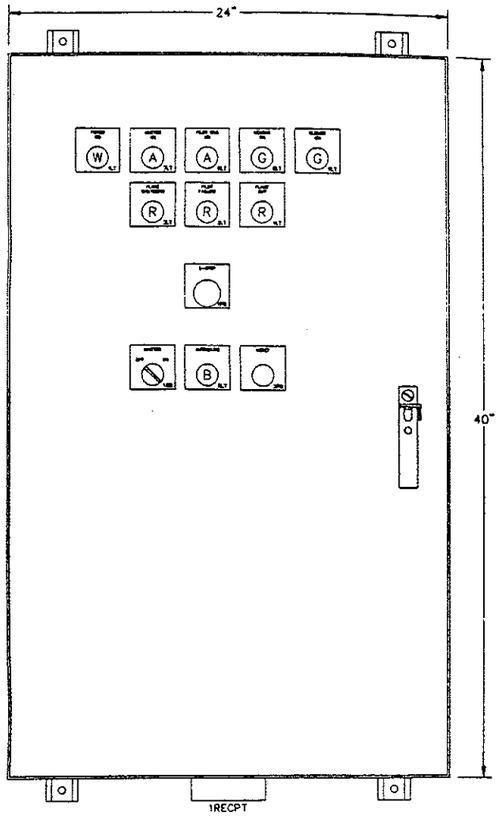

FRONT OF ENCLOSURE

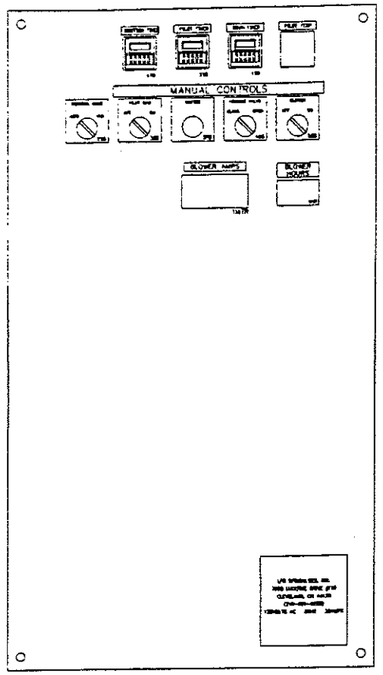

SWING-OUT PANEL

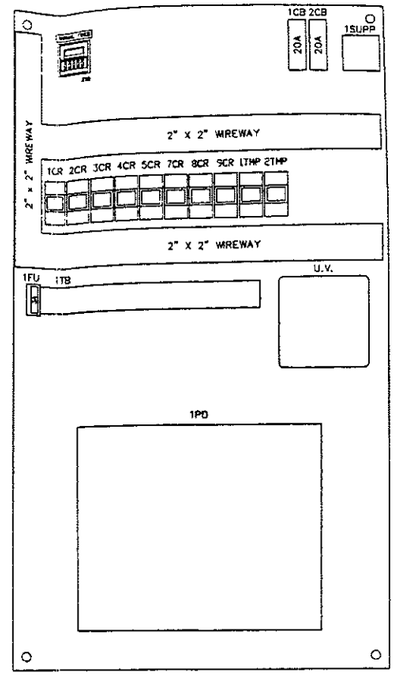

SUB PANEL

NAME	QTY.	DESCRIPTION	PART No.	MFG.
	1	ENCLOSURE	A-3L40H2412LP	HOFFMAN
	2	PANEL	A40P24	HOFFMAN
	1	SWING-OUT PANEL KIT	A-NADFK	HOFFMAN
	1	MOUNTING KIT	D-LMTGFT	HOFFMAN
1,2CB	2	CIRCUIT BREAKER	Q0U-120	SQ'D
1PB	1	PUSHBUTTON (E-STOP)	CR104PBM01R6	G.E.
1PB	1	PUSH-PULL KIT	CR104PXF12	G.E.
2,3PB	2	PUSHBUTTON	CR104PBG91B1	G.E.
1SS	1	KEY SWITCH	CR104PSK21A92M	G.E.
2SS	1	SELECTOR SWITCH (2 POS.)	CR104PSG21B92	G.E.
3,4,5SS	3	SELECTOR SWITCH (2 POS.)	CR104PSG21B91	G.E.
1LT	1	PILOT LIGHT (WHT)	CR104PLG32W	G.E.
2,3,4LT	3	PILOT LIGHT (RED)	CR104PLT32R	G.E.
5LT	1	PILOT LIGHT (BLUE)	CR104PLT32L	G.E.
6,7LT	2	PILOT LIGHT (AMB)	CR104PLT32M	G.E.
8,9LT	2	PILOT LIGHT (GRN)	CR104PLT32G	G.E.
1-4TR	4	TIMERS	H3CA8-120VAC	OMRON
1,3,4TR	3	SOCKETS	P3G-08	OMRON
2TR	1	SOCKETS	P2CF-08	OMRON
1,3,4TR	3	MOUNTING BRACKET	Y92F-30	OMRON
1-9CR, 1,2TMP	10	RELAYS	RY4S-UL-AC120V	IDEC
1-9CR, 1,2TMP	10	SOCKETS	SY4S-05	IDEC
1FU	1	FUSEBLOCK	1492-CE6	A-B
1FU	1	FUSE	FNM-3	BUSSMAN
TEMP	1	TEMPERATURE CONTROLLER	PYZ4RAY1-5V	FUJI ELEC.
TEMP	1	SOCKET	P3GA-11	FUJI ELEC.
1HTR	6 FT.	HEAT TAPE	12 WATT	WRAP-ON CORP.
1SUPP	1	SURGE SUPPRESSOR	SDSA1175	SQ'D
1SUPP	1	SURGE SUPP MTG. BRKT.	QO-SAMK	SQ'D
1MTR	1	AMP METER	W3170-16	WESTCON
	1	CURRENT TRANSFORMER	2SFT-101	INSTR. TRANS.
UV	1	UNIVERSAL BASE	Q270A1024	HONEYWELL
UV	1	UV DETECTOR	R7023C1001	HONEYWELL
1RECPT	1	RECEPTACLE	5362	HUBBELL
1RECPT	1	COVER	5205WO	HUBBELL
1RECPT	1	HANDYBOX	180 1/2	STEEL CITY
1HR	1	HOUR METER	779536-201	VEEDER ROOT
1PD	1	TELEPHONE DIALER	X7320	KAYE

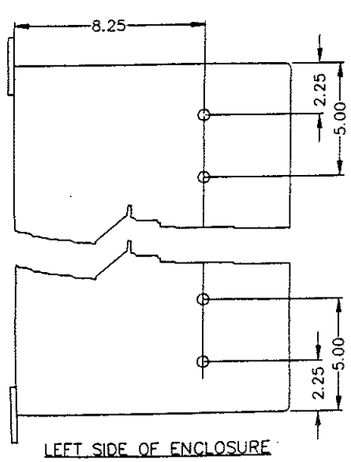

LEFT SIDE OF ENCLOSURE
(SWING PANEL BRACKET MOUNTING HOLES)

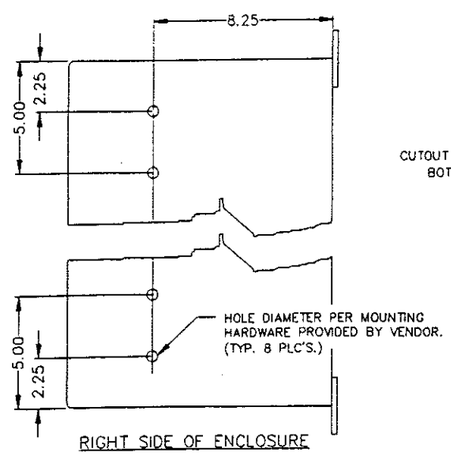

RIGHT SIDE OF ENCLOSURE
(SWING PANEL BRACKET MOUNTING HOLES)

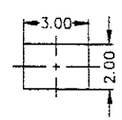

CUTOUT IN CENTER OF ENCLOSURE BOTTOM FOR RECEPTACLE.

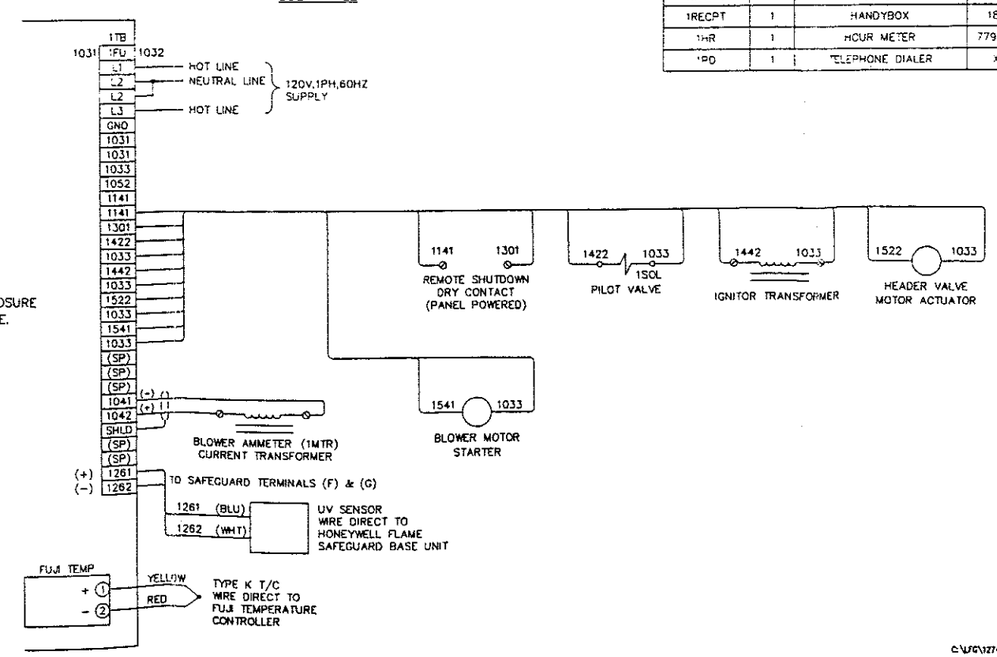

REV.	DESCRIPTION	DATE	BY
A	AS BUILT	3/1/95	

This drawing and the information disclosed herein is the property of LFG SPECIALTIES, INC. and is not to be reproduced in whole or in part, or used to furnish information to others, without written permission from LFG SPECIALTIES, INC.

LFG SPECIALTIES, INC.
HEAD OFFICE
7550 LUCERNE DRIVE #110
CLEVELAND, OHIO 44130
(216) 891-0305
PLANT
705 FRIENDSHIP DRIVE
NEW CONCORD, OHIO 43762
(614) 826-7422

TITLE: FLAME-TROL 1, PANEL LAYOUT, DETAILS AND BILL OF MATERIAL

PROJECT NAME: SKID MOUNTED LANDFILL GAS FLARE PACKAGE MILWAUKEE COUNTY LANDFILL

CUSTOMER: MILWAUKEE COUNTY

P.O. NUMBER:

SCALE: 1/4" = 1"
DATE: 02/14/95
ENGINEER: JCK
DRAWN BY: RCJ
APPROVED BY: JCK
PROJECT NUMBER: 1274

DRAWING NUMBER: 1274-4

C:\LFG\1274-4, 1 : 1.000, 03/07/95 at 14:41

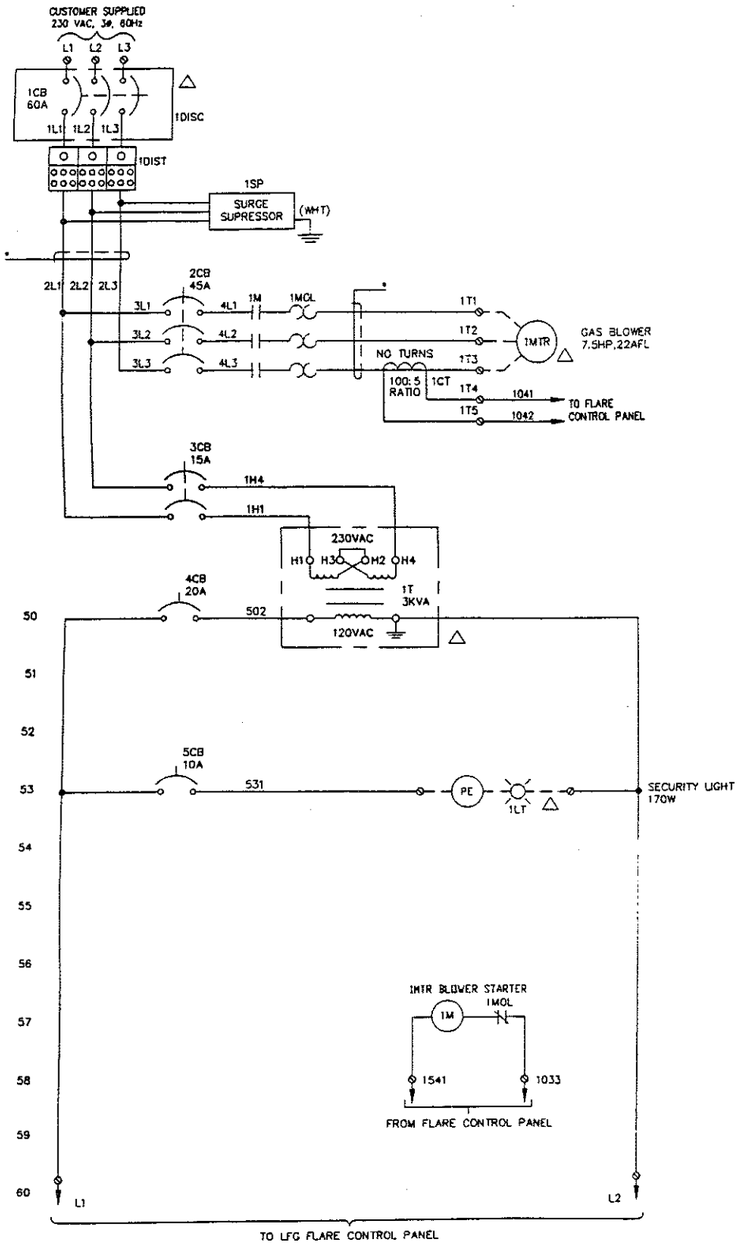

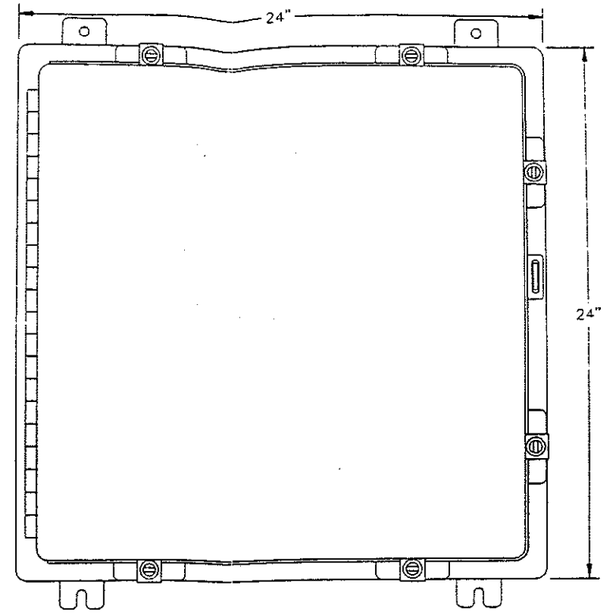

FRONT OF ENCLOSURE

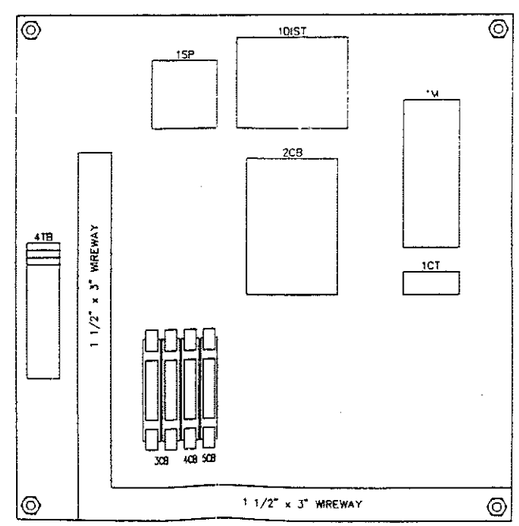

SUB-PANEL

NAME	QTY.	DESCRIPTION
1DISC	1	DISCONNECT
	1	ENCLOSURE
	1	SUB PANEL
1DIST	1	DISTRIBUTION BLOCK
1SP	1	SURGE SUPPRESSOR
1M	1	MOTOR STARTER
1CT	1	AMMETER COIL
1CB	1	CIRCUIT BREAKER (60A)
2CB	1	CIRCUIT BREAKER (45A)
3CB	1	CIRCUIT BREAKER (15A)
4CB	1	CIRCUIT BREAKER (20A)
5CB	1	CIRCUIT BREAKER (10A)
1T	1	3KVA TRANSFORMER
1LT	1	170 WATT SECURITY LIGHT
1TB	1	TERMINAL BLOCK

REV.	DESCRIPTION	DATE	BY
1	AS BUILT	03/06/95	PDK

This drawing and the information disclosed herein is the property of LFG SPECIALTIES, INC. and is not to be reproduced in whole or in part, or used to furnish information to others without written permission from LFG SPECIALTIES, INC.

LFG SPECIALTIES, INC.
HEAD OFFICE
7550 LUCERNE DRIVE #110
CLEVELAND, OHIO 44130
(216) 891-0305
PLANT
705 FRIENDSHIP DRIVE
NEW CONCORD, OHIO 43762
(614) 826-7422

TITLE: BLOWER CONTROL PANEL LAYOUT AND ELECTRICAL SCHEMATIC

PROJECT NAME: SKID MOUNTED LANDFILL GAS FLARE PACKAGE

CUSTOMER: MILWAUKEE COUNTY LANDFILL

P.O. NUMBER:

DRAWING NUMBER: 1274-3

SCALE: NONE
DATE: 02/15/95
ENGINEER: L.K.
DRAWN BY: P.D.K.
APPROVED BY:
PROJECT NUMBER: 1274

△ - REMOTELY LOCATED COMPONENTS.

C:\LFG\1274-3 1 : 1.000, 03/07/95 at 16:38

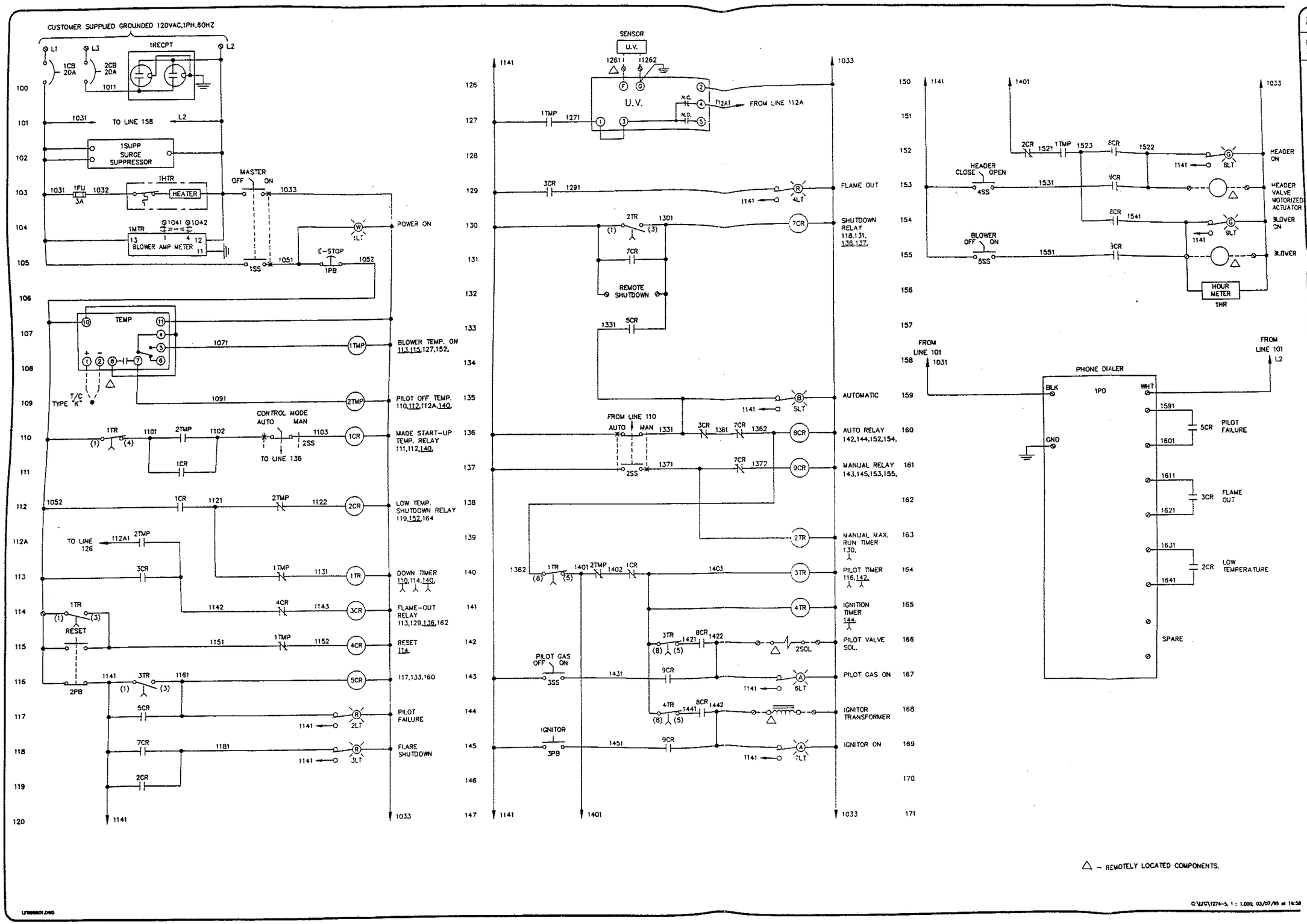

REV.	DESCRIPTION	DATE	BY
A	AS BUILT	3/1/95	RCJ

This drawing and the information disclosed herein is the property of LFG SPECIALIES, INC. and is not to be reproduced in whole, or in part, or used to furnish information to others, without written permission from LFG SPECIALIES, INC.

LFG SPECIALTIES, INC.
HEAD OFFICE
7550 LUCERNE DRIVE #110
CLEVELAND, OHIO 44130
(216) 891-0305
PLANT
705 FRIENDSHIP DRIVE
NEW CONCORD, OHIO 43762
(614) 826-7422

SCALE 1" = 1"
DATE 02/14/95
ENGINEER JCK
DRAWN BY RCJ
APPROVED BY JCK
PROJECT NUMBER 1274

TITLE: ELECTRICAL SCHEMATIC

PROJECT NAME: SKID MOUNTED LANDFILL GAS FLARE PACKAGE MILWAUKEE COUNTY LANDFILL

P.O. NUMBER

CUSTOMER: MILWAUKEE COUNTY

DRAWING NUMBER: 1274-5

LFG SPECIALTIES, INC.

LANDFILL GAS FLARE MODEL CF616I4

Flare is designed for the following conditions:

Design Range	100-500	SCFM
Maximum	590	SCFM
Minimum	59	SCFM

LFG (landfill gas)

Methane content	40-60	%
Supply temperature	100	°F
Supply pressure	8	in. W.C.

The flare will be LFG Specialties utility flare, Model CF616I4 and include the following standard equipment:

FLARE STACK

*** Constructed of 4 in. x 12 ft schedule 40 A-53 pipe

*** Self supporting base plate with support gussets, welded to the skid assembly

*** 4 in. 150# flanged LFG inlet connection

*** 2 in. NPT drain port with plug at base of stack

COMBUSTOR ASSEMBLY

*** 6 in. x 3 ft. 304 stainless steel burner tip flange connected to stack

*** Flame retainer, 304 stainless steel ribbing system in burner tip to produce optimum swirl, obtaining high efficiency mixing and holding the flame at the flare tip

*** 18 in. x 3 ft. 304 stainless steel windshield to retain flame at the flare tip and provide retention time for efficient combustion

*** 1 each 2 in. lifting eye, welded to tip at bottom of windshield for ease of raising stack during installation

IGNITOR ASSEMBLY

*** 2 in. diameter 304 stainless steel pilot tip with integral spark plug connection/housing

Printed on Recycled Paper

*** Spark plug ignitor, eliminates gap problems often incurred with straight rod type ignitors

*** 110/5,000V single pole transformer mounted in NEMA 4 enclosure

*** High temperature ignitor leads in ½ in. conduit

*** Pilot nozzle in ½ in. stainless steel pipe

*** Chromel-Alumel (type k) thermocouple in stainless steel thermal well to give pilot confirmation

*** Ultraviolet flame scanner to give flame confirmation and provide flare safety shutdown

TECHNICAL DATA

FLOW RATE

Maximum	590	SCFM
Minimum	59	SCFM

GAS COMPOSITION

40-60% CH_4, Remainder- CO_2, Air, Inerts

Temp/Pres: 100°F, 8 in. W.C.

FLARE SIZE

6 in. tip, 18 ft. OAH

DESTRUCTION EFFICIENCY

98.0% overall destruction of total hydrocarbons

Guaranteed to meet E.P.A. emission standards for landfill gas disposed in utility "candle type" flares.

TURNDOWN RATION

10:1 from maximum flow rate

WIND LOADS

Designed for 100 mph wind loading (per ASCE 7-88, Exp. C)

IGNITOR/PILOT SYSTEM

The LFG Specialties ignitor/pilot system is designed for the reliable ignition of landfill gas flares. When coupled wit the Flame-Trol controller, it provides a fully integrated automatic starter and monitoring flare ignition and control system.

The ignitor/pilot system includes the following standard equipment:

IGNITOR ASSEMBLY

*** 2 in. diameter 304 stainless steel pilot tip with integral spark plug connection/housing

*** Spark plug igniter, eliminates gap problems often incurred with straight rod type igniters

*** 110/5,000V single pole transformer mounted in NEMA 4 enclosure

*** High temperature igniter leads in ½ in. conduit

*** Pilot nozzle in ½ in. stainless steel pipe

*** Chromel-Alumel (type k) thermocouple in stainless steel thermal well to give pilot confirmation

*** Ultraviolet flame scanner to give flame confirmation and provide flare safety shutdown

PILOT GAS CONTROLS

*** Pressure control regulator

*** Pilot fuel pressure gauge

*** Fail-close solenoid valve with manual override

*** Main manual shut-off valve

Pilot Gas Pressure Regulator

Fisher Controls

Instruction Manual

Series 64 & 67 LP-Gas Regulators

FISHER®

July 1986 *Form MCK-1108*

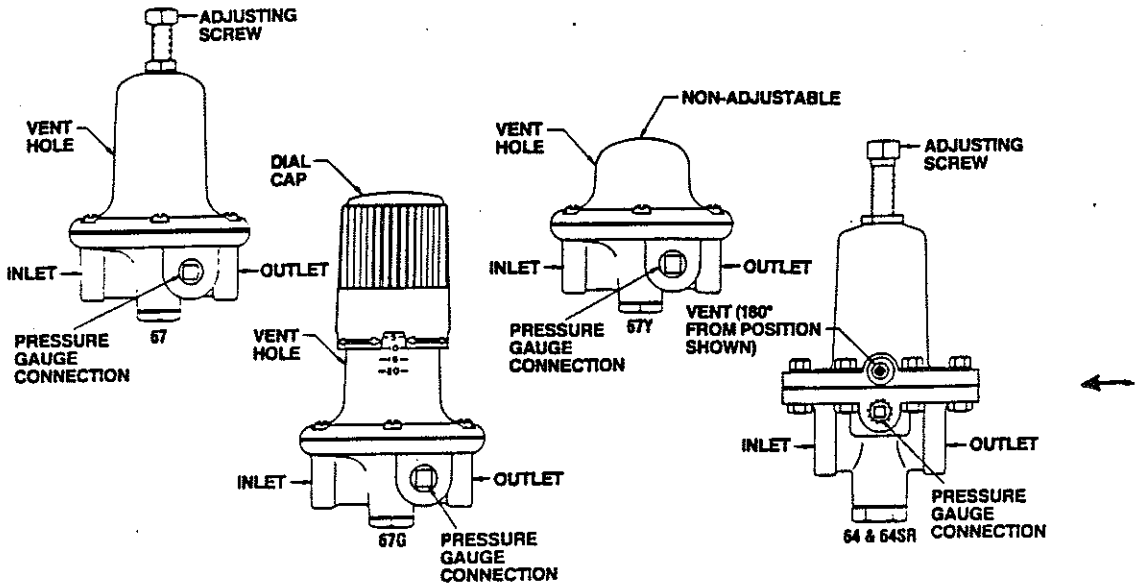

Figure 1. Series 64 and 67

WARNING

Fisher equipment must be installed, operated, and maintained in accordance with federal, state, and local codes and Fisher instructions. The installation in most states must also comply with NFPA No. 54 and 58 standards.

Only personnel trained in the proper procedures, codes, standards, and regulations of the LP-gas industry should install and service this equipment. Failure to follow these instructions or to properly install and maintain this equipment could result in an explosion and/or fire causing property damage and personal injury or death.

Things To Tell The Gas Customer:

1. Point out the regulator's vent (or vent assembly) to the customer and **stress that this opening must remain unobstructed at all times.** Tell the customer to be sure to check the vent opening after a freezing rain, sleet storm, or snow to make sure ice has not formed in the vent.

2. Show the customer the shutoff valve on the container. The customer should close this valve immediately if gas can be smelled, appliance pilot lights fail to stay on or appear higher than usual, or any other abnormal situation occurs.

3. Tell the customer to call your company to service the regulator. If the regulator vents gas or a leak develops in the system, only a qualified gas serviceman should install or service the regulator.

Introduction

Scope of Manual

This instruction manual covers installation and mainte-

Part Number D450025 T012

©Fisher Controls International, Inc. 1986; All Rights Reserved

Table 1. Specifications

Type Number	Inlet & Outlet Connections	Vent Opening	Adjustment	Outlet Adjustment Range	Internal Relief Valve	Max. Vapor Capacity BTU/Hr Propane[1]
64	1/2-inch FNPT	1/4-inch FNPT	Wrench	3-100 psig (4 springs)	No	5,250,000
64SR	1/2-inch FNPT	1/4-inch FNPT	Wrench	3-35 psig (3 springs)	Yes	3,600,000
67	1/4-inch FNPT	Hole in spring case	Wrench or handwheel	3-100 psig (4 springs)	No	1,150,000
67G	1/4-inch FNPT	Hole in spring case	Dial Cap	5-100 psig (3 springs)	No	1,150,000
67Y	1/4-inch FNPT	Hole in spring case	Nonadjustable	10, 15, or 20 psig	No	700,000

1. Based on inlet pressure 20 psig greater than outlet with 20% droop. Liquid capacity 160 gph for 64 Series; 3-5 gph for 67 Series.

nance for the following high pressure regulators: Types 64, 64SR, 67, 67G, and 67Y.

Description

All of the regulators are designed for high pressure (pounds per square inch) service and can be used on either vapor or liquid service. Their outlet pressure ranges from 3 to 100 psig.

Types 64 and 64SR are used for either first-stage (reducing container pressure to around 10 psig for a second-stage regulator) or final-stage high pressure service (reducing container pressure to a lower pressure for a high pressure burner). The 67 Series is intended for final-stage high pressure applications. The regulators are normally painted red.

Specifications

Table 1 lists the specifications for the regulators. Contact the factory if the regulators are to be used on any service other than LP-gas, natural gas, or air. Temperature limits are −20° to 150° F and maximum inlet pressure is 250 psig.

Installation

WARNING

All vents should be kept open to permit free flow of air into and out of the regulator. Protect openings against the entrance of rain, snow, ice formation, paint, mud, insects, or any other foreign material that could plug the vent or the vent line.

LP-gas may discharge to the atmosphere through the vent of Type 64SR. An obstructed vent which limits air or gas flow can interfere with proper pressure regulation and could result in personal injury or property damage. Failure to use a vent line where there can be a hazardous accumulation of gas could result in personal injury or property damage.

Never use a first-stage (pounds to pounds) regulator on low pressure (inches of water column) service because personal injury or property damage could occur.

Before installing the regulator, check for damage which might have occurred in shipment. Also check for and remove any dirt or foreign matter which may have accumulated in the regulator body or the pipeline. Apply pipe compound to the male threads of the pipe.

Make sure gas flow through the regulator is in the correct direction—"Inlet" and "Outlet" connections are clearly marked on the regulator. The installation should be adequately protected from vehicular traffic and damage from other external sources.

If possible, install the regulator with the vent pointed down to allow condensate to drain. A hood or encasement must be used to protect the regulator's vent opening from the elements on outdoor installations. An auxiliary vent assembly, such as the Fisher Y602 Series, could also be used for vent protection on Type 64 and 64SR.

Install the regulator high enough above ground level—at least 18-inches—so that rain splatter cannot freeze in the vent. Do not install the regulator in a location where there can be excessive water accumulation or ice formation, such as directly beneath a downspout, gutter, or roof line of a building.

Type 64 Series regulators installed indoors are limited to 20 psig maximum inlet pressure. A vent line to the

outside of the building is required for the Type 64SR. A vent assembly, such as Fisher Y602 Series, should be used on the end of the vent line. The same installation precautions apply to vent assemblies as the integral regulator vents covered previously. To install the vent line, remove the vent screen and apply a good grade of pipe dope to the male threads of the line. Vent piping or tubing must not restrict the flow passage of the 64SR's internal relief valve. Type 67 Series regulators should not be used on indoor installations.

Installation with shutoff valves ahead of the Type 64SR is recommended on liquid service, see figure 2. Installations with shutoffs downstream of the 64SR can trap liquid between the regulator and the shutoff. The trapped liquid can vaporize, opening the regulator's internal relief valve and exhausting gas through the vent. On installations where it is impossible to install the 64SR without using shutoffs between the regulator and the burner, either install the regulator in a safe location or run a line from the regulator vent to a safe location so that any discharge through the relief valve will not create a hazard.

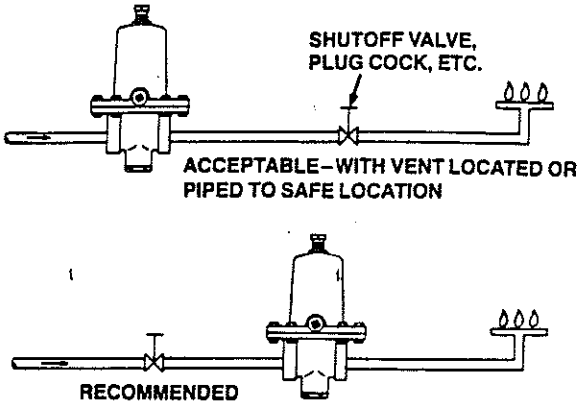

Figure 2. Type 64SR on Liquid Service Requires Care with Downstream Restrictions

Adjustment

The outlet pressure of all the regulators except Type 67Y can be adjusted. If it becomes necessary to adjust the outlet pressure on Types 64, 64SR, or 67, loosen the locknut at the top of the spring case. Turn the adjusting screw or handwheel clockwise to increase or counterclockwise to decrease the outlet pressure setting. Tighten the locknut to maintain the adjustment setting.

On Type 67G regulators, move the dial cap until the arrow on the cap points to the desired outlet pressure setting stamped on the spring case.

Overpressure Protection

WARNING

Personal injury or system damage may result if these regulators are installed without appropriate overpressure protection. Maximum emergency outlet pressure for the 67 Series is 50 psig over the outlet pressure setting, or 100 psig, whichever is greater. Maximum emergency outlet pressure for the 64 Series is 220 psig. Outlet pressures greater than these above the setpoint may cause damage to regulator parts, leaks in the regulator, or personal injury due to bursting of pressure-containing parts or explosion of accumulated gas.

If the regulator is exposed to an overpressure condition, it must be inspected for any damage that may have occurred.

Large volumes of gas may discharge through the Type 64SR vent during internal relief valve operation which can result in fire or explosion from accumulated gas.

A relief valve is required downstream of all the regulators (except Type 64SR) used on final-stage service. Type 64SR has an internal relief valve and does not require a separate relief valve downstream. The internal relief valve opens when downstream pressure reaches approximately 125% to 250% of the setpoint. When the internal relief valve opens, gas escapes through the 64SR's vent. The 64SR's internal relief valve gives overpressure protection against excessive build-up resulting from seat leakage due to worn parts or chips of foreign material on the orifice.

Maintenance

WARNING

To avoid personal injury or equipment damage, do not attempt any maintenance or disassembly without first isolating the regulator from system pressure and relieving all internal pressure.

Regulators that have been disassembled for repair must be tested for proper operation before being returned to service. Only parts manufactured by Fisher should be used for repairing Fisher regulators. Relight pilot lights according to normal startup procedures.

Due to normal wear or damage that may occur from external sources, these regulators must be inspected and maintained periodically. The frequency of inspection and replacement of the regulators depends upon the severity of service conditions or the requirements of local, state, and federal regulations. Even under ideal conditions, these regulators should be replaced after 15 years from the date of manufacture or sooner should inspection reveal the need.

Visually inspect the regulator each time a gas delivery is made for:

1. Improper installation.
2. Plugged or frozen vent.
3. Wrong regulator or no regulator in the system.
4. Internal or external corrosion.
5. Age of the regulator.
6. Any other condition that could cause the uncontrolled escape of gas.

Failure to do the above could result in personal injury or property damage.

Make sure the regulator vent, vent assembly, or vent line does not become plugged by mud, insects, ice, snow, paint, etc. The vent screen (Type 64 and 64SR only) aids in keeping the vent from becoming plugged, and the screen should be clean and properly installed.

Replace any regulators that have had water in their spring case or show evidence of external or internal corrosion. Checking for internal corrosion requires complete removal of the spring case and shut down of the gas system. Closely examine regulators directly connected to the container valve by means of a solid POL adaptor (horizontal mounting) for signs of corrosion. Correct any improper installations.

Older regulators are more likely to catastrophically fail because of worn or corroded parts. Replace regulators over 15 years of age; other service or environmental conditions may dictate replacement of the regulator before it becomes 15 years old, refer to Fisher Bulletin LP-32.

Regulator Repair

Regulators that have been disassembled for repair must be tested for proper operation before being returned to service. Only parts manufactured by Fisher should be used for the repair of Fisher regulators. Be sure to give the complete type number of the regulator when corresponding with the factory.

While this information is presented in good faith and believed to be accurate, Fisher Controls does not guarantee satisfactory results from reliance upon such information. *Nothing contained herein is to be construed as a warranty or guarantee, express or implied, regarding the performance, merchantability, fitness or any other matter with respect to the products,* nor as a recommendation to use any product or process in conflict with any patent. Fisher Controls reserves the right, without notice, to alter or improve the designs or specifications of the products described herein.

FISHER **Fisher Controls**

For further information, write:
Fisher Controls
P.O. Box 900, McKinney, Texas 75069, U.S.A.

Printed in USA

Installation & Maintenance Instructions

2-WAY INTERNAL PILOT-OPERATED SOLENOID VALVES

NORMALLY CLOSED OPERATION - 3/4", 1", 1-1/4", 1-1/2" OR 2" NPT

SERIES 8215

Form No. V5996R3

IMPORTANT: See separate solenoid installation and maintenance instructions for information on: Wiring, Solenoid Temperature, Causes of Improper Operation, and Coil Replacement.

DESCRIPTION

Series 8215 valves are 2-way normally closed internal pilot-operated solenoid valves. Valve bodies are made of rugged aluminum with trim and internal parts made of steel and stainless steel. Series 8215 valves may be provided with a general purpose or explosionproof solenoid enclosure.

OPERATION

Normally Closed: Valve is closed when solenoid is de-energized; open when energized.

Note: No minimum operating pressure differential required.

INSTALLATION

⚠ CAUTION: Not all valves are approved for fuel gas service. Check nameplate for correct catalog number, pressure, voltage, frequency, and service. Never apply incompatible fluids or exceed pressure rating of the valve. Installation and valve maintenance to be performed by qualified personnel.

Future Service Considerations

Provision should be made for performing seat leakage, external leakage, and operational tests on the valve with a nonhazardous, noncombustible fluid after disassembly and reassembly.

Temperature Limitations

For maximum valve ambient and fluid temperatures, refer to chart below. Check catalog number prefix on nameplate to determine maximum temperatures.

Construction	Coil Class	Catalog Number Prefix	Max. Ambient Temp°F	Max. Fluid Temp°F
AC Construction	F	FT	125	125
	H	HT	140	140
DC Construction	B or H	None or HT	77	77

*Dupont's Registered Trademark

Positioning

Valve must be mounted with solenoid vertical and upright.

Piping

Connect piping to valve according to markings on valve body. Apply pipe compound sparingly to male pipe threads only. If applied to valve threads the compound may enter the valve and cause operational difficulty. Avoid pipe strain by properly supporting and aligning piping. When tightening the pipe, do not use valve or solenoid as a lever. Locate wrenches applied to valve body or piping as close as possible to connection point.

⚠ CAUTION: To avoid damage to the valve body, DO NOT OVERTIGHTEN PIPE CONNECTIONS. If Teflon* tape, paste, spray or similar lubricant is used, use extra care when tightening due to reduced friction.

IMPORTANT: To protect the solenoid valve, install a strainer or filter, suitable for the service involved, in the inlet side as close to the valve as possible. Clean periodically depending on service conditions. See ASCO Series 8600, 8601 and 8602 for strainers.

MAINTENANCE

⚠ WARNING: To prevent the possibility of severe personal injury or property damage, turn off electrical power, depressurize valve, extinguish all open flames and avoid any type of sparking or ignition. Vent hazardous or combustible fluid to a safe area before servicing the valve.

NOTE: It is not necessary to remove the valve from the pipeline for repairs.

Cleaning

All solenoid valves should be cleaned periodically. The time between cleanings will vary depending on the medium and service conditions. In general, if the voltage to the coil is correct, sluggish valve operation, excessive noise or leakage will indicate that cleaning is required. In the extreme case, faulty valve operation will occur and the valve may fail to open or close. Clean valve strainer or filter when cleaning the valve.

©Automatic Switch Co. MCMXCI All Rights Reserved

Preventive Maintenance

- Keep the medium flowing through the valve as free from dirt and foreign material as possible.

  While in service, the valve should be operated at least once a month to insure proper opening and closing.
- Depending on the medium and service conditions, periodic inspection of internal valve parts for damage or excessive wear is recommended. Thoroughly clean all parts. If parts are worn or damaged, install a complete ASCO Rebuild Kit.

Causes of Improper Operation

- **Incorrect Pressure:** Check valve pressure. Pressure to valve must be within range specified on nameplate.
- **Excessive Leakage:** Disassemble valve and clean all parts. If parts are worn or damaged, install a complete ASCO Rebuild Kit.

Valve Disassembly

⚠ WARNING: To prevent the possibility of severe personal injury or property damage, turn off electrical power, depressurize valve, extinguish all open flames and avoid any type of sparking or ignition. Vent hazardous or combustible fluid to a safe area before servicing the valve.

NOTE: Determine valve construction AC (Figure 1 on page 3) or DC (Figure 2 on page 4) then proceed as follows:

1. Remove solenoid enclosure, see separate installation and maintenance instructions.
2. For AC Construction, unscrew solenoid base sub-assembly. For DC Construction, unscrew solenoid base sub-assembly with special wrench adapter provided in ASCO Rebuild Kit. For wrench adapter only, order kit No.K218-949. NOTE: For alternate type open end wrench, order kit No.K168-146-1 which is available for solenoid base sub-assembly removal or replacement.
3. Remove bonnet screws, valve bonnet, bonnet gasket, core/diaphragm sub-assembly and body gasket.
4. All parts are now accessible to clean or replace. If parts are worn or damaged, install a complete ASCO Rebuild kit.

Valve Reassembly

1. Lubricate bonnet gasket and body gasket with a light coat of DOW CORNING® 200 Fluid lubricant or an equivalent high-grade silicone fluid.
2. Apply a light coat of RemGrit TFL 50® Dry Lubricant to:
   - Valve seat
   - Valve body flange where diaphragm assembly contacts the valve body and body gasket.
   - Internal surface of valve bonnet where diaphragm assembly contacts bonnet when valve is in the energized (open position).

IMPORTANT: If valve has been disassembled for inspection and cleaning only and a Rebuild Kit is not being installed, lubricate the following with RemGrit TFL 50® Dry Lubricant:

- Diaphragm assembly on both sides.
- Main disc at base of core/diaphragm sub-assembly.
- Pilot disc at base of core assembly.

⚠ CAUTION: Do not distort hanger spring between core assembly and diaphragm assembly when lubricating pilot disc.

3. Replace body gasket and core/diaphragm sub-assembly with closing spring attached. Locate bleed hole in core/diaphragm sub-assembly approximately 30° from the valve inlet.
4. Replace valve bonnet and bonnet screws (6). Torque screws in a crisscross manner to 100 ± 10 in-lbs [11,3 ± 1,1 Nm].
5. For AC construction, replace bonnet gasket and solenoid base sub-assembly. For DC construction refer to separate "Solenoid Installation and Maintenance Instructions" for lubrication instructions; then install bonnet gasket, housing and solenoid base sub-assembly. Torque solenoid base sub-assembly to 175 ± 25 in-lbs [19,8 ± 2,8 Nm].
6. Replace solenoid (see separate instructions) and make electrical hookup.

⚠ WARNING: To prevent the possibility of severe personal injury or property damage, check valve for proper operation before returning to service. Also perform internal seat and external leakage tests with a nonhazardous, noncombustible fluid.

7. Restore line pressure and electrical power supply to valve.
8. After maintenance is completed, operate the valve a few times to be sure of proper operation. A metallic *click* signifies the solenoid is operating.

ORDERING INFORMATION FOR ASCO REBUILD KITS

Parts marked with an asterisk (*) in the exploded views are supplied in Rebuild Kits.

• When Ordering Rebuild Kits for ASCO Valves, order the Rebuild Kit number stamped on the valve nameplate. +

+ If the number of the kit is not visible, order by indicating the number of kits required, and the Catalog Number and Serial Number of the valve(s) for which they are intended.

Torque Chart

Part Name	Torque Value in Inch-Pounds	Torque Value in Newton-Meters
Solenoid Base Sub-Assembly	175 ± 25	19,8 ± 2,8
Bonnet Screws	100 ± 10	11,3 ±1,1

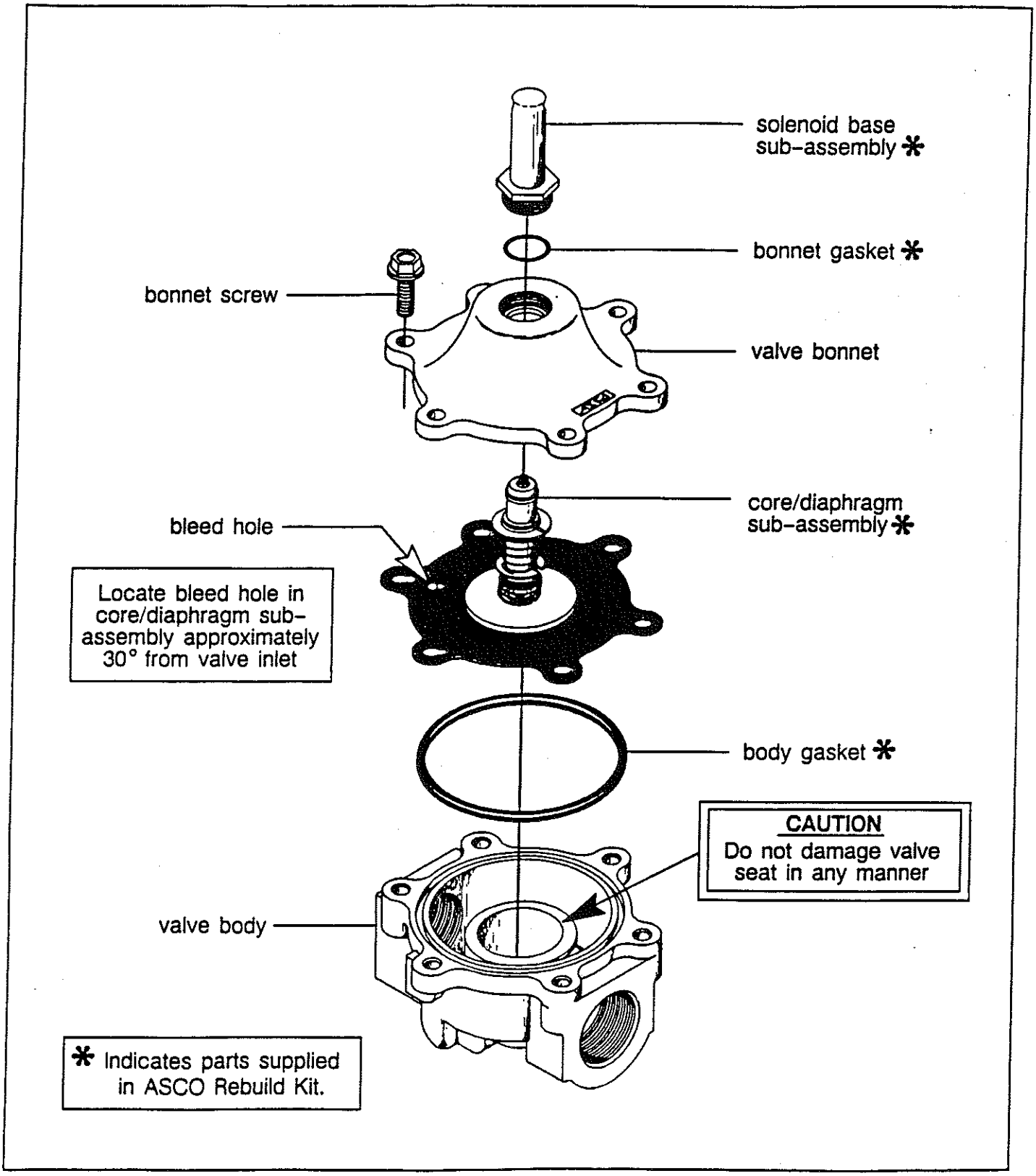

Figure 1. Series 8215 valves without solenoid, AC Construction.

ASCO Valves Automatic Switch Co. 50-60 Hanover Road, Florham Park, New Jersey 07932

Torque Chart

Part Name	Torque Value in Inch-Pounds	Torque Value in Newton-Meters
Solenoid Base Sub-Assembly	175 ± 25	19,8 ± 2,8
Bonnet Screws	100 ± 10	11,3 ± 1,1

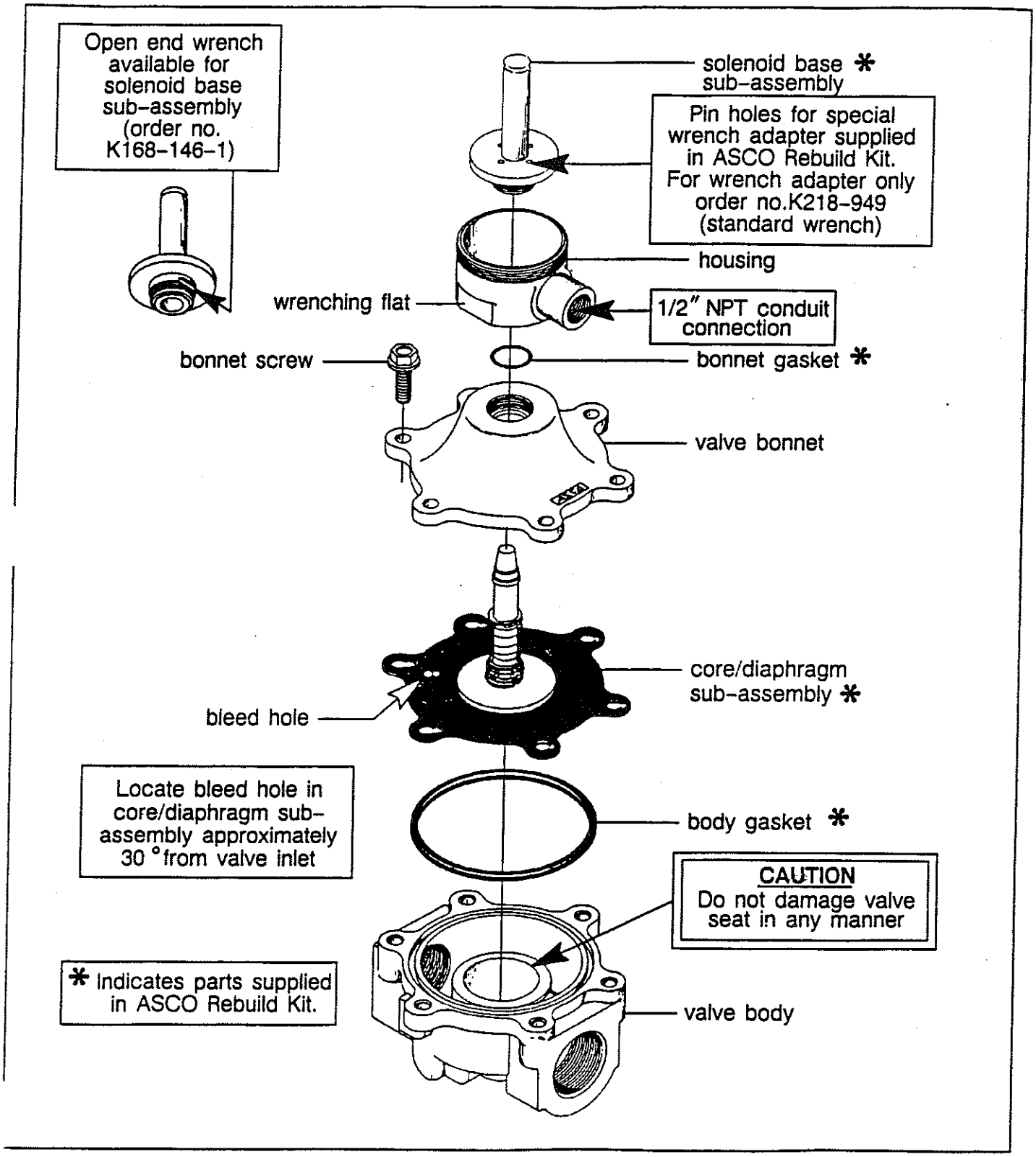

Figure 2. Series 8215 valves without solenoid, DC Construction.

8215G20
120/60,110/50 CSA
AFP35603
1/2 2W NC 9316 20290
RPLS 8215C20 INC PRFX FT,GS,R,T

ASCO® Red-Hat II™

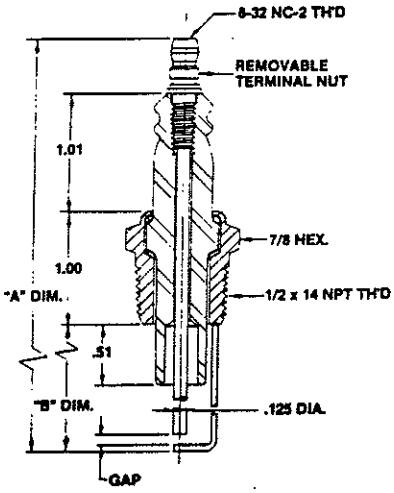

I-64 Series

CAT NO.	"A" DIM.	"B" DIM.	ELEC. MAT.	GAP
I-64-1	4.20	1.72	NI	.090
I-64-3	6.24	3.75	NI	.090

OTHER SPECIALS AVAILABLE. FAX US YOUR PRINTS AND/OR PART NUMBERS. WE ARE EAGER TO SERVICE YOUR REQUIREMENTS.

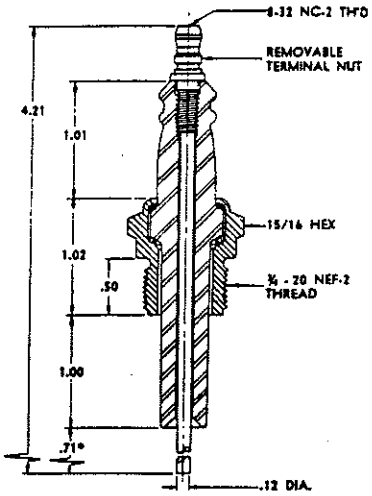

I-75-5

*Standard — Other Lengths Available Upon Request

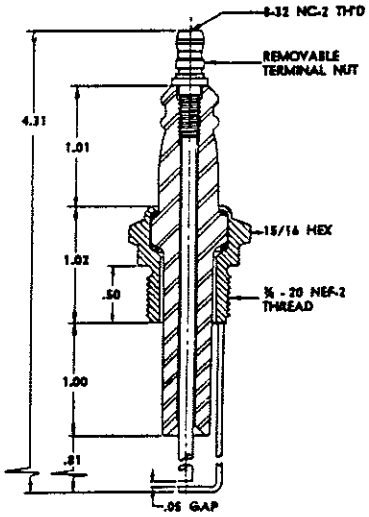

I-75-1
UL Recognized

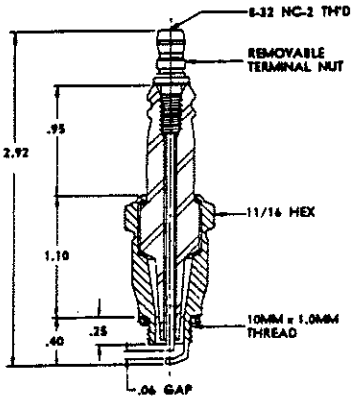

I-101

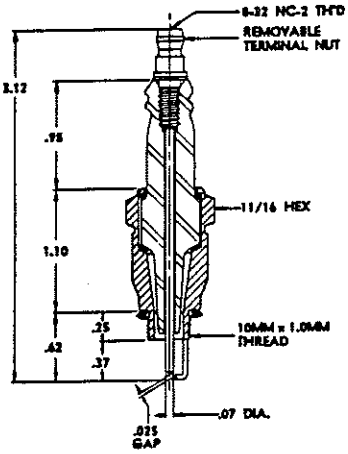

I-102

P.O. Box 846, Farmingdale, New Jersey 07727

1-800-631-2153 IN N.J. 1-908-938-3600 FAX 1-908-938-3969

Webster®

Ignition Transformer

612-6A7

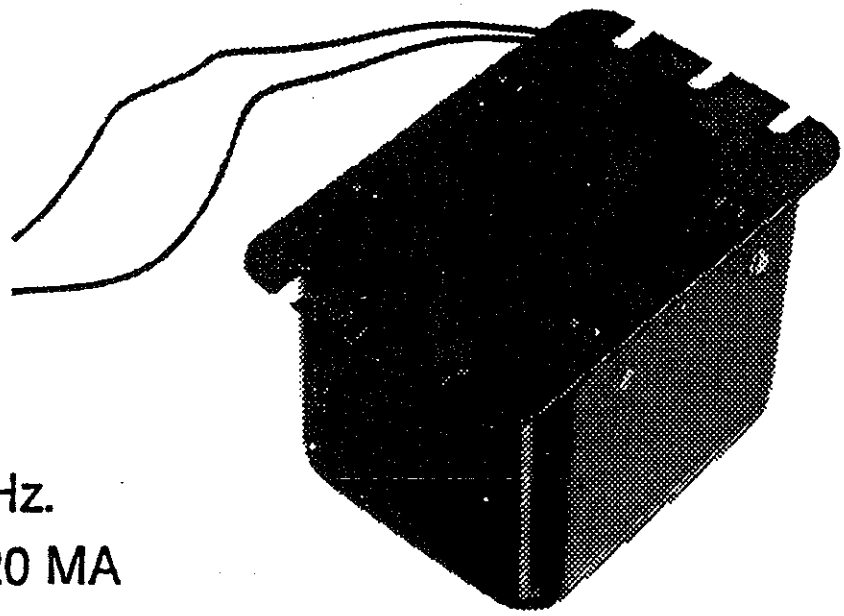

Replaces
6EEGW-2
A06-SA6
1092-F
638-181

Pri. 120 V., 60 Hz.
Sec. 6,000 V., 20 MA
Single pole
endpoint grounded

121-49543-5

Webster Heating and Specialty Products, Inc.

Frankfort, Kentucky 40601

Thermocouple Element

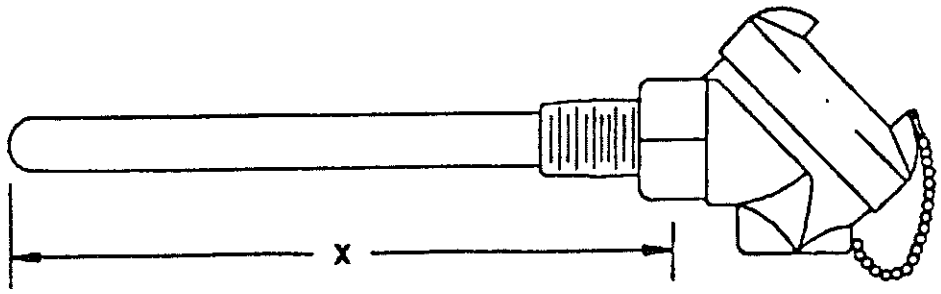

Pyromation K8C-9-50-120-K

Type K

8 ga wire

X Length = 120"

Stainless 304 Protection tube

Weatherproof Aluminum Head

Thermocouple Element

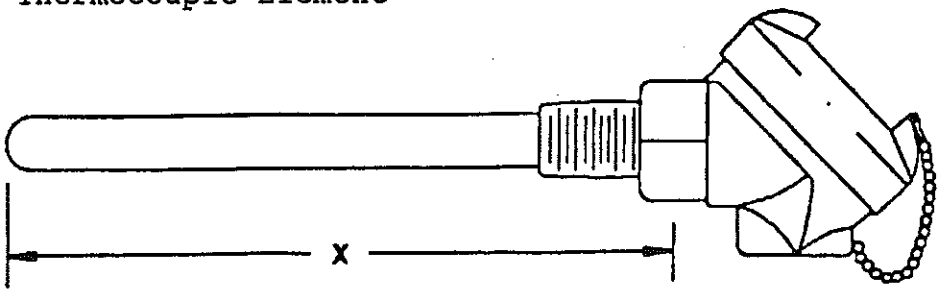

Pyromation K8C-9-50-108-K

Type K

8 ga wire

X Length = 108"

Stainless 304 Protection tube

Weatherproof Aluminum Head

LFG SPECIALTIES, INC.

FLAME-TROL I
UTILITY FLARE CONTROL SYSTEM

The LFG Specialties Flame-Trol I is a technically advanced fully integrated, 100% automatic flare controller. The Flame-Trol I is specifically designed to provide the operator full flexibility to set or change any temperature and/or time setting utilized in the automatic operation of a utility "candle type" flare.

FEATURES OF THE FLAME-TROL I INCLUDE:

1) Ultraviolet Flame Scanner

   A) The ultraviolet scanner and associated controller provide flame confirmation and initiate "flare safety shutdown". Upon loss of flame, the scanner will automatically shutdown the blowers and close the automated header valve (if utilized). The flame scanner has a maximum response time of 4 seconds, providing almost immediate system shutdown.

   B) The scanner also provides a safety lockout on the start up of the blowers and opening of the header valve, until confirmation of the pilot flame.

2) Temperature controller which offers complete flexibility to set temperature points at which certain functions will be initiated. These functions are:

   A) "System shutdown", should the ultraviolet scanner fail to operate for any reason, the temperature controller will act as a back-up safety shutdown. Upon loss of temperature at the flare tip the controller will also automatically shutdown the system.

   B) "Blower on", When the pilot burner reaches the appropriate temperature, set by operator, to indicate the pilot is in fact burning, the controller starts the blower motor automatically.

   C) "Pilot off", After the blower has been started, the pilot remains burning until the temperature at the flare tip has reached the ideal burning temperatures as set by operator, and the Flame-Trol I shuts off the propane supply to the pilot.

   The system will then operate as long as there is any flame at the flare tip. The controller also features a constant L-E-D temperature read-out.

Printed on Recycled Paper

3) Pilot Timer and Pilot Failure Indicator

A) This timer begins the instant the ignition cycle begins. It is set by the operator at the maximum time required for the propane pilot to achieve the blower on temperature and the methane supply to be ignited. This time will typically be 2 to 3 minutes. At the end of this time, the propane supply valve will be closed and the pilot flame extinguished, if not already shut off by the temperature controller.

B) The pilot timer also controls the "pilot failure" function of Flame-Trol I. Upon initiation of the automatic ignition cycle this timer begins timing down. Should the pilot not achieve the "blower on" temperature (set in the pilot temperature controller) in the time set in the pilot timer, the entire system will be shut down. The "pilot failure" indicator light will then come on. The system will not attempt to automatically reignite until the pilot problem has been remedied. If it is determined that the propane supply has not been exhausted or another problem with the pilot system cannot be found, the operator may attempt automatic reignition by pushing the "reset" button.

4) Down Time Timer

A) If the methane supply to the flare tip has been exhausted or the flame is extinguished by wind or other causes, the blowers are automatically shut down and the down timer starts. This timer has a range of one second to 999 hours. The operator determines the length of time necessary to rejuvenate the methane supply and sets this timer accordingly. Once the timer has completed its cycle, the system will open the pilot valve and the ignitor will fire to automatically reignite the flare. The timer has an LCD display in effect when the system is in the "down time" function.

5) Ignitor Timer

A) The ignitor timer allows the operator to set the time the ignitor will spark during the ignition cycle. This allows for the adjustment of the spark duration to compensate for the distance of the propane supply from the flare; thus extending the life of the ignitor plug, transformer and other pilot components.

6) Manual/Auto Switch

A) The system also features a convenient manual/off/auto switch which allows the operator to completely bypass the automatic controls and operate the flare manually.

7) The Flame-Trol I is enclosed in a NEMA 4 "outdoor" weather proof enclosure, suitable for control rack/wall mounting.

A) "Indicator Lights", Mounted on the controller are indication lights for; power on, ignition on, pilot on, blowers on, flare safety shutdown.

B) Also, mounted to the controller is a 110V, 15A duplex outlet in a NEMA 5-20R receptacle box with covers.

8) Automatic phone dialer

The automatic phone dialer and alarm system will be Kaye, DiaLog Plus Model X7320 or equal. This system will monitor up to four (4) expandable to eight (8) input alarm conditions and has the capability of storing and dialing up to eight (8) different phone numbers. The system utilizes user-recorded voice alarm messages to specify the cause of the alarm and/or shutdown. Unit will be mounted in a NEMA 4 enclosure and installed on the flare control rack. System will require a telephone line at the flare station and will be capable of specifying the shutdown alarm condition, restart or lockout.

ADDITIONAL CONTROL EQUIPMENT

*** CONTROL RACK ***

The Flame-Trol I automatic flare controller, associated motor starters, main control power supply and pilot supply controls will all be mounted on a free standing control rack. The rack will be fabricated from 6 in. x 2 in. channel A-36, sandblasted and painted with rust resistant zinc oxide primer and overcoat of heavy duty industrial enamel.

The following will be fully mounted, piped and wired on the control rack:

*** Flame-Trol I automatic flare controller in NEMA 4 enclosure

*** 1 each automatic phone dialer installed in a NEMA 4 enclosure

*** 1 each 7.5 Hp induction motor starter, 3 pole, 230 VAC magnetic, full voltage type, with normally open holding circuit, manual reset and overload relay, installed in NEMA 4 enclosure, (for landfill gas blower motor)

*** 1 each AC ammeter on LFG blower motor circuit with 200% scale

*** 1 each run time hour meter on blower motor circuit

*** The main power panel for 230V, 3 phase, 60HZ power supply with solid copper neutral and ground bus connections, multi-pole circuit breaker with common trip, installed in a weatherproof enclosure

*** A 230V to 120V transformer with terminal board installed in a weatherproof enclosure

*** A 170W mercury vapor security light with photocell and on/off switch (shipped loose for field installation)

*** A 120V, 15A duplex outlet in a weatherproof NEMA 5-20R receptacle box with covers

*** Pilot gas control system including: strainer, pressure control regulator, pressure gauge with isolation valve, fail-close solenoid valve with manual override and main manual shut off valve

SQUARE D SP1175 SECONDARY SURGE ARRESTER

INSTALLATION INSTRUCTION SHEET

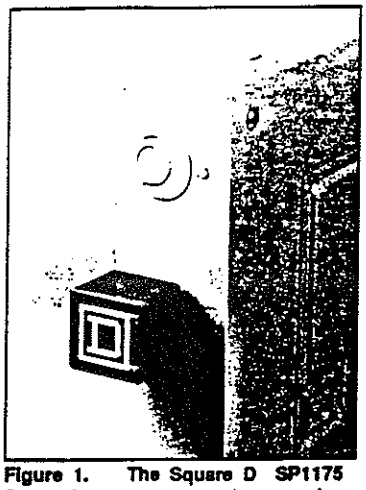

Figure 1. The Square D SP1175 Surge Arrester mounted on service panel through1/2 inch knockout hole.

The Square D SP1175 Secondary Surge Arrester is designed for surge protection of three wire 120 / 240 VAC electrical services and appliances. It can also be used for two wire service up to a maximum of 175V. ac. Two units may be installed to provide protection on 120 / 208V. ac three phase four wire services. The SP1175 arrester will afford protection against surge-related damage to secondary distribution wiring systems.

TOOLS / MATERIALS / EQUIPMENT REQUIRED FOR INSTALLATION:

Screwdriver	-	standard blade & tip 1/4" x 0.037"
	-	standard blade & tip 3/8" x 0.062"
Pump pliers	-	1 3/4"
Cutting pliers	-	14 AWG
Voltage tester	-	600 VAC, UL Listed, CSA Certified

WARNING: SHOCK and ENERGY HAZARDS are present! Turn off power before installation or removal of this arrester. Square D recommends that the arrester be installed by a qualified electrician. Incorrectly installing the unit may make it ineffective. Careless or inexperienced installers are likely to come into contact with hazardous voltage and should not attempt installation of this product.

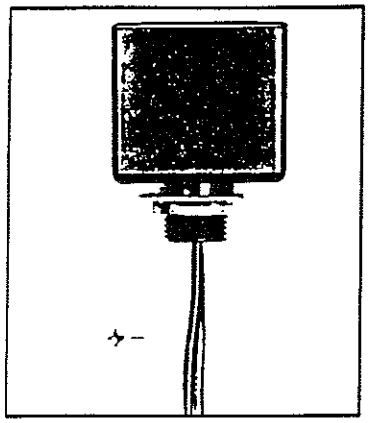

Figure 2. Optional bracket mounting for Square D SP1175 Surge Arrester.

INSTALLATION:

1) Turn power off.

2) Remove the load center cover panel using large screwdriver (save screws).

3) Verify power is off using an approved AC voltage tester per its operating instructions.

4) Select installation site realizing that shorter leads mean better protection.

5a) If you are installing the arrester in a QO housing **using bracket** QO-SAMK, remove the rubberband, tie or tape bundling the SP1175 leads together, straighten the leads and unscrew the nut on the arrester threads and remove it. Insert the arrester wires through the large hole in the mounting bracket, positioning the bracket on the arrester threads. Put the nut over the arrester wires and slide up onto the threads and hand-tighten. Holding the arrester in one hand, tighten the nut securely using pliers. Position the arrester and bracket in the mounting location you have selected, installing the mounting screws through the bracket into the housing holes and tighten to secure the arrester and bracket to the housing.

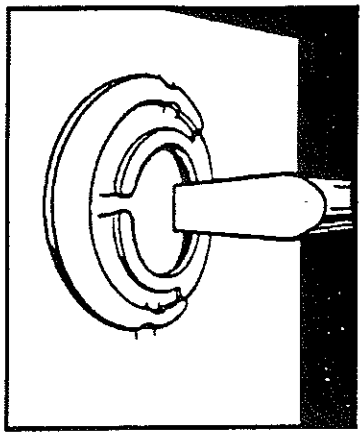

Figure 3

5b) If you are installing the arrester **without a bracket**, remove the enclosure knockout in the mounting location you have selected by driving the center knockout inward (see Figure 3) using the large blade and tip screwdriver, then alternately push or pry the knockout outward then drive it inward until it breaks

Continued on reverse

SQUARE D SP1175 SECONDARY SURGE ARRESTER
INSTALLATION INSTRUCTION SHEET

INSTALLATION (cont'd.)

free (discard knockout). Remove the rubberband, tie or tape bundling the SP1175 leads together, straighten the leads and unscrew the nut on the arrester threads and remove it. Insert the arrester wires through the knockout hole in the housing being careful not to damage the wire insulation. Put the nut over the arrester wires and slide up onto the threads and hand-tighten. Holding the arrester with one hand, tighten the nut securely using pliers.

6) Position the white wire as desired, cut to length with cutting pliers and then strip the insulation back 1/2". Insert the exposed conductor into the ground terminal and tighten securely with the small screwdriver.

7) Referencing the wiring diagrams below, position the black wires in turn as desired, cut to length and strip back the insulation 1/2". Insert the exposed conductor into the appropriate phase terminal and tighten securely with the small screwdriver; repeat for the second black wire.

8) Inspect installation.

9) Replace the load center cover panel using the large screwdriver and the screws from Step 2.

10) Turn power on.

NOTE: Secondary Surge Arresters do not prevent lightning strokes to the building or lines on which they are installed. They are not intended as replacements for lightning rods or other grounding/shielding devices. Nearby direct lightning strokes may exceed the unit's capacity and cause damage. Be sure to obtain permission from your local electric utility before installing this unit outdoors on the utility side of the watt-hour meter. Also, make sure to follow the local electrical codes. Make certain that the ground circuit is solidly grounded to water pipes, adjacent ground, lightning rods, etc.

WIRING DIAGRAMS

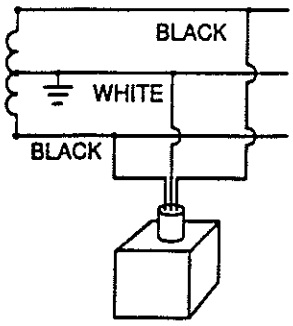

One SP1175 on
120/240Vac Circuit

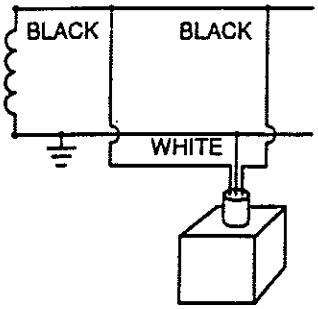

One SP1175 on
120Vac Circuit

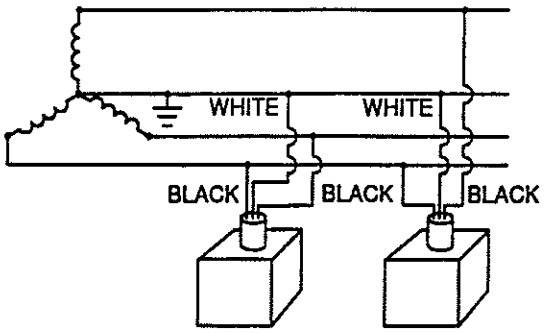

Two SP1175s on
120/208Vac Circuit

We Respond.

WARNING INSTRUCTIONS: HAZARD OF ELECTRICAL SHOCK OR BURN.
TURN OFF POWER SUPPLYING THE LOAD CENTER BEFORE INSTALLATION OR REMOVAL OF THE SURGE ARRESTER..

15

40269-938-05

INSTALLATION INFORMATION

SQUARE D QO-SAMK MOUNTING KIT FOR SECONDARY SURGE ARRESTER SP1175 OR SP1175I

FOR USE IN SQUARE D SERIES G1 OR G2 SINGLE PHASE 100-225 AMPERE MAIN BREAKER QO LOAD CENTERS.

READ COMPLETE INSTALLATION INFORMATION BEFORE BEGINNING INSTALLATION!

INSTALLATION: Install the surge arrester in the mounting bracket and secure with the locknut provided with the surge arrester. Mount the bracket to back of the load center box in available gutter space with two self tapping screws provided with the mounting kit. See illustrations on back. If no mounting holes are available, locate the bracket in an available gutter space and drill two .147 diameter holes (#26 drill bit) using the bracket as a drilling template.

For maximum protection it is very **IMPORTANT** to keep the surge arrester leads as short as possible and avoid unnecessary bends. After mounting the bracket, carefully route the wires to prevent them from contacting live parts or interfering with mounting branch circuit breakers. Cut the leads to minimum required length. Remove the insulation 1/2 inch from the ends of the leads.

Connect the white lead to the GROUNDED neutral bar. If the neutral is NOT GROUNDED connect the white lead to the equiqment ground bar. Tighten the wire binding screw on the neutral/ground bar to the torque specified on the load center wiring diagram.

Next, crimp the two crimp lugs to the black leads using AMP Incorporated tool no. 49935 or equivalent. Place the two black leads on the mounting studs on the load side of the main breaker. (Do not remove the nuts securing the main breaker terminals to the bus bars.) Secure in place with the two hex nuts provided in the mounting kit and tighten to 50 in.-lbs. torque. Route wires to connections as illustrated on the reverse side of this information sheet.

QO-SAMK MOUNTING KIT CONTENTS

NAME	QUANTITY
MOUNTING BRACKET	1
SELF TAPPING MOUNTING SCREWS	2
CRIMP LUG	2
HEX NUT	2

40269-938-05

ORDER SECONDARY SURGE ARRESTER SEPARATELY
CATALOG NO. SP1175 OR SP1175I

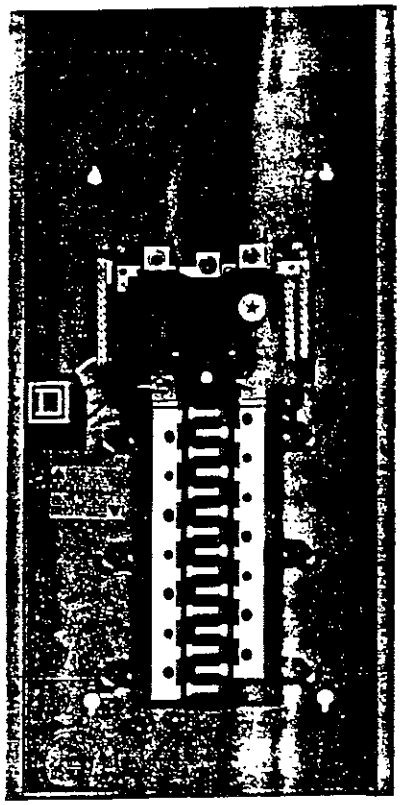

SQUARE D QO LOAD CENTER
150-225 AMP
WITH SECONDARY SURGE ARRESTER
SP1175 MOUNTED IN GUTTER.

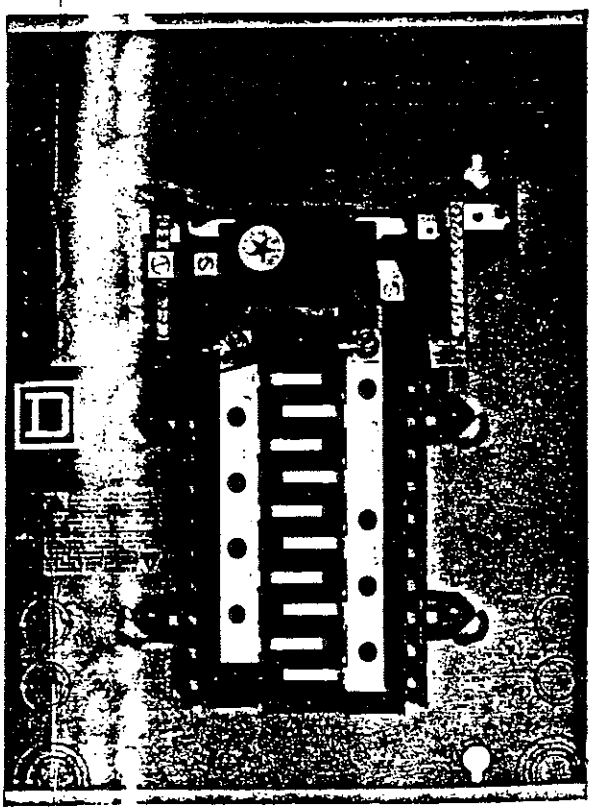

SQUARE D QO LOAD CENTER
100-125 AMP
WITH SECONDARY SURGE ARRESTER
SP1175 MOUNTED IN GUTTER.

SDSA1175

SECONDARY SURGE ARRESTER

BB

175VAC Max. (Phase-to-ground)

SQUARE D

48042-156-01 G680

60

Made in USA

WARNING INSTRUCTIONS: HAZARD OF ELECTRICAL SHOCK OR BURN.
TURN OFF POWER SUPPLYING THE LOAD CENTER BEFORE INSTALLATION OR REMOVAL OF THE SURGE ARRESTER.

40269-938-05

INSTALLATION INFORMATION

SQUARE D QO-SAMK MOUNTING KIT FOR SECONDARY SURGE ARRESTER SP1175 OR SP1175I

FOR USE IN SQUARE D SERIES G1 OR G2 SINGLE PHASE 100-225 AMPERE MAIN BREAKER QO LOAD CENTERS.

READ COMPLETE INSTALLATION INFORMATION BEFORE BEGINNING INSTALLATION!

INSTALLATION: Install the surge arrester in the mounting bracket and secure with the locknut provided with the surge arrester. Mount the bracket to back of the load center box in available gutter space with two self tapping screws provided with the mounting kit. See illustrations on back. If no mounting holes are available, locate the bracket in an available gutter space and drill two .147 diameter holes (#26 drill bit) using the bracket as a drilling template.

For maximum protection it is very **IMPORTANT** to keep the surge arrester leads as short as possible and avoid unnecessary bends. After mounting the bracket, carefully route the wires to prevent them from contacting live parts or interfering with mounting branch circuit breakers. Cut the leads to minimum required length. Remove the insulation 1/2 inch from the ends of the leads.

Connect the white lead to the GROUNDED neutral bar. If the neutral is NOT GROUNDED connect the white lead to the equipment ground bar. Tighten the wire binding screw on the neutral/ground bar to the torque specified on the load center wiring diagram.

Next, crimp the two crimp lugs to the black leads using AMP Incorporated tool no. 49935 or equivalent. Place the two black leads on the mounting studs on the load side of the main breaker. (Do not remove the nuts securing the main breaker terminals to the bus bars.) Secure in place with the two hex nuts provided in the mounting kit and tighten to 50 in.-lbs. torque. Route wires to connections as illustrated on the reverse side of this information sheet.

INSTALLATION INFORMATION
FOR
SDSA3650 SECONDARY SURGE ARRESTER

DESCRIPTION

The SDSA3650 Secondary Surge Arrester is designed for surge protection of single-phase or three-phase grounded electrical services up to 650VAC.

This secondary surge arrester will protect most secondary distribution wiring systems against surge-related damage but may not protect solid state or electronic equipment from all lightning or other large power surges.

This secondary surge arrester is suitable for indoor or outdoor installation.

WARNING: Hazardous voltages can cause severe personal injury or death and/or property damage. Disconnect power before installing or removing this surge arrester.

NOTE: The electrical system must be properly grounded for the secondary surge arrester to work correctly. Have a qualified person with training in the operation and maintenance of electrical power systems install the surge arrester. Make sure the electrical system is grounded in accordance with Article 250 of the National Electrical Code.

CAUTION: Megger, high-voltage, or hi-pot tests will damage this secondary surge arrester. Disconnect all power from the electrical equipment and isolate secondary surge arrester before testing.

INSTALLATION

1. Turn OFF all power to the electrical equipment where the secondary surge arrester will be installed.

2. Open door and/or remove cover from the equipment. For maximum surge protection, choose a location for the secondary surge arrester (A) which allows leads (B) to be kept as short as possible.

3. Remove nut (C).

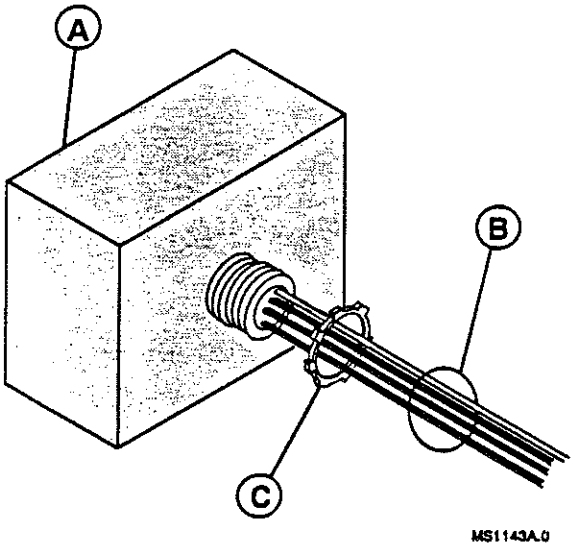

Figure 1

© 1993 SQUARE D COMPANY. All rights reserved.

4. Remove a 1/2 in. (12.7 mm) enclosure knock-out (A) at the selected mounting location.

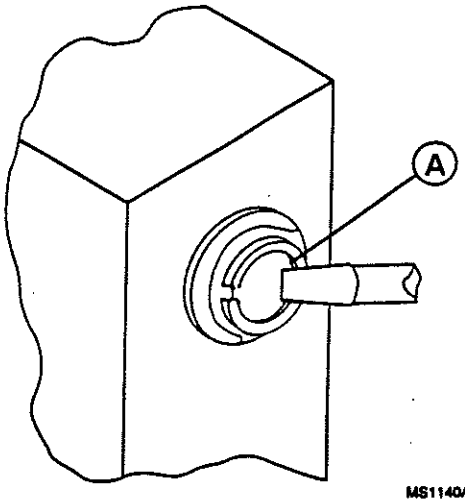

MS1140A.0

Figure 2

5. Insert surge arrester wires through the knock-out hole being careful not to damage insulation on the wires. Install and tighten the nut to secure surge arrester (A) to the enclosure (B).

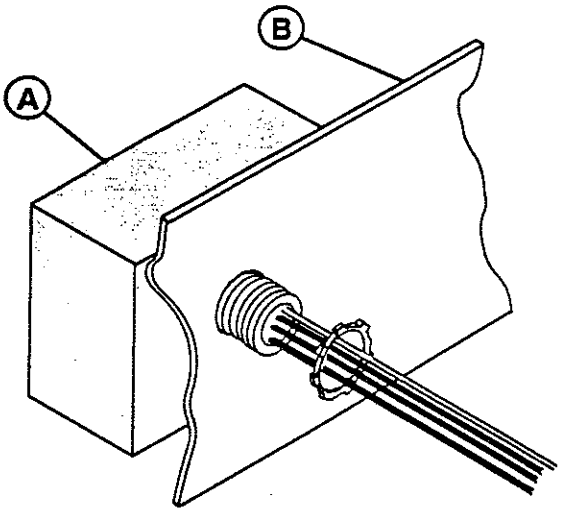

MS1144A.0

Figure 3

6. See Figure 4. For maximum surge protection, it is important to keep wires as short as possible while avoiding sharp bends. Cut wires for minimum length needed and strip insulation from ends of wires. Connection of wires must be made by an approved method. Connect white wire to equipment neutral. Connect black wires to appropriate equipment phase terminals. This can include connections to separate lugs, connections to a branch circuit breaker that has terminals suitable for use with #14 AWG wire, or other connection methods acceptable by the National Electrical Code or local electrical inspection authority.

7. Install cover and/or close door on electrical equipment.

8. Turn ON power to electrical equipment.

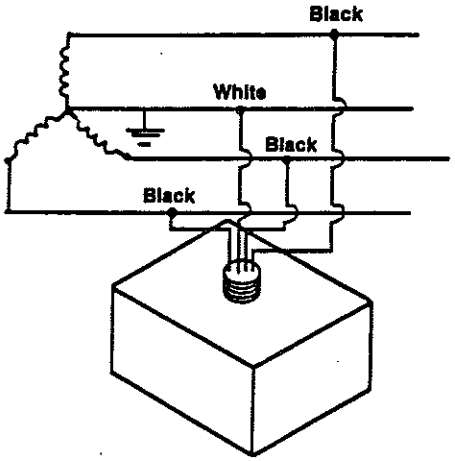

Three-phase Four-wire 208Y/120VAC or 480Y/277VAC

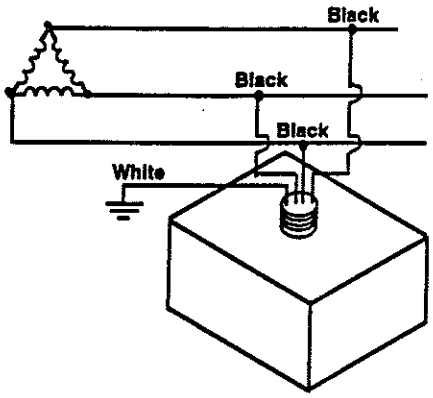

Three-phase Three-wire (Ungrounded) 240VAC, 480VAC or 600VAC

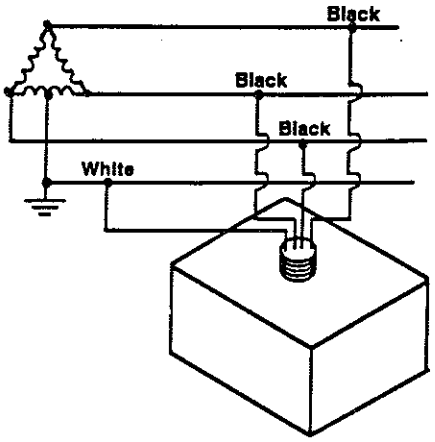

Three-phase Four-wire 240/120VAC

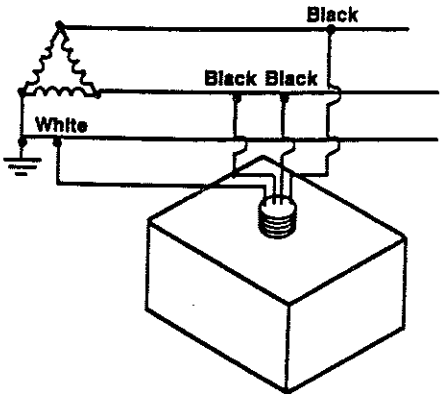

Three-phase Three-wire 240VAC or 480VAC

MS1145A.0

Figure 4

Installer note: Please make sure that these instructions are left with the customer. © 1991 WRAP-ON

UNDERWRITERS LABORATORIES INC. LISTED RESIDENTIAL/MOBILE HOME PIPE HEATING CABLE

LISTED

894R

WARNING: INCORRECT USAGE AND/OR IMPROPER INSTALLATION OF WRAP-ON RESISTANCE ELECTRIC PIPE HEATING CABLE CAN CAUSE DANGER OF FIRE, ELECTRIC SHOCK, ELECTROCUTION, AND/OR FREEZING OF THE PROTECTED PIPE.

This pipe heating cable is Listed by Underwriters Laboratories only for the specific uses and locations as stated below. The word "shall" as it appears below denotes the imperative and mandatory, or an action that must be taken without exception.

CAUTION: Installation shall be made only upon Residential/Mobile Home rigid type water supply pipes which are full of water and located above ground. Pipe shall be made of steel, copper, CPVC plastic, ABS plastic, or PVC plastic. If intended for any other purpose, such as different plastic pipe, fluids other than water, drain, or waste pipes, return this equipment and obtain the correct type of heating equipment.

No pipe heating cable installation shall penetrate (or pass through) any wall, floor, or roof of any structure or building. Pipe heating cable shall be installed only in sheltered accessible locations, such as under a skirted mobile home, in a crawl space, in a basement, or in a domestic garage. No pipe heating cable shall be installed in any concealed space within any structure or building, such as an enclosed joist space or an enclosed wall stud space.

Pipe heating cable shall not be used upon buried pipes nor used as roof and/or gutter deicing equipment. Pipe heating cable shall not be exposed to the elements (weather). Do not use foam types of insulation, use only fiberglass pipe insulation. Pipe heating cable shall not be powered by an extension cord.

GENERAL INSTRUCTIONS

Please read through all directions before installation begins. A few minutes spent now for proper preparation and planning will assure a correct and trouble-free installation.

NOTE: Additional protection is provided by the use of a ground fault circuit interrupter (GFCI). The National Electrical Code (of the National Fire Protection Association, Quincy, MA) requires the use of GFCI devices for all outdoor and certain indoor power receptacles, especially where associated with water. The Wrap-On Company strongly urges you to take advantage of this extra protection for all Wrap-On electric pipe heating cable installations. The Department of Housing and Urban Development (HUD) has a rule which forbids the use of GFCI devices in the pipe heating cable circuit of a mobile home; Wrap-On laments the loss of personal protection which is due to this ruling. Extra precautions against electric shock and/or electrocution should be taken in such installations.

PREPARATION AND PLANNING

1. Verify that you are using this pipe heating cable for one of its intended purposes (refer to the caution above.)
2. Measure the length of pipe to be protected. Separate pipe heating cables shall be used for separate pipes. (See figure 2.)
3. Measure the pipe diameter (See figure 3) to find pipe size according to the chart below:

TRADE PIPE SIZE	OUTSIDE DIAMETER IN INCHES STEEL	COPPER	CPVC
1/2	7/8	5/8	5/8
3/4	1-1/16	7/8	7/8
1	1-3/8	1-1/8	—

4. Verify that the correct length pipe heating cable has been purchased according to the selection chart below:

PIPE DIAMETER	HOW TO SELECT PROPER SIZE CABLE LENGTH PER FOOT OF PIPE	INSULATION THICKNESS	TEMPLATE SIZE (SEE #23)
1/2	1.1	1.25	3.25
3/4	1.2	1.25	3.5
1	1.3	1.5	4.25

5. Select that same length or the next longest within two to three feet. Note that some installations might best be made using two Wrap-On resistance pipe heating cables, rather than one, due to an unusual length. For example: when 39 feet are needed, select one 24 foot unit and one 18 foot unit. When 26 feet are needed, two 13 foot units would be better than one 30 foot unit. More than one properly installed receptacle outlet may be required.
6. If there are any TEE or WYE type branch fittings along the pipe to be protected, the minimum number of separate Wrap-On resistance pipe heating cables required shall be equal to the count of such fittings plus one.

7. Wrap-On resistance pipe heating cable shall not be lengthened, spliced, or shortened, as any alteration will adversely affect its design and may create a hazardous situation. (See figure 7.)
8. Wrap-On resistance pipe heating cable shall not be wrapped more closely than 2 turns per foot (Six inches between turns, see figue 8.).
9. Wrap-On resistance pipe heating cable shall never be allowed to touch, cross itself, or overlap. If allowed to do so, unit will overheat and may create a hazardous situation. (See figure 9.)

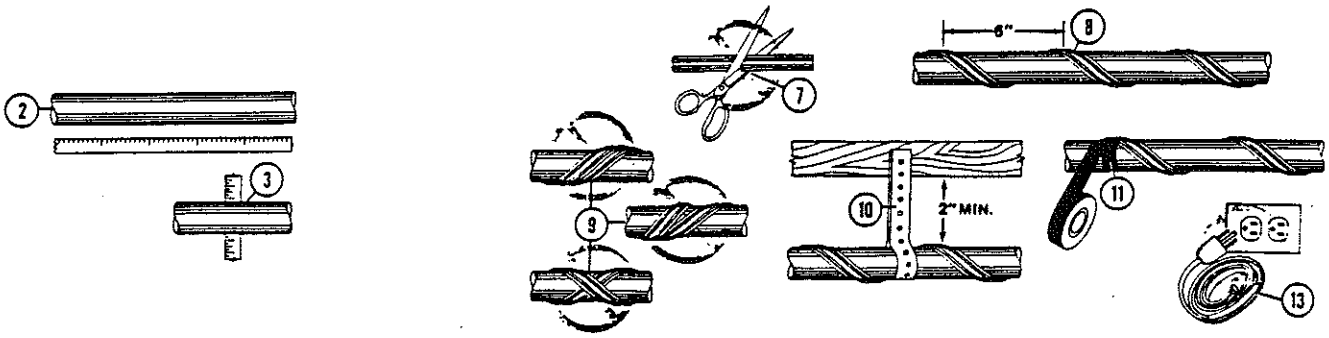

WARNING: **INCORRECT USE AND/OR IMPROPER INSTALLATION OF WRAP-ON RESISTANCE PIPE HEATING CABLE CAN CAUSE DANGER OF FIRE, ELECTRIC SHOCK, ELECTROCUTION, AND/OR FREEZING OF THE PROTECTED PIPE.**

10. Pipe heating cable shall not be used within two inches of wood, plasterboard, or other flammable surfaces or materials. Use metal pipe hanger materials to suspend pipe away from flammable materials prior to cable installation. (See figure 10.)
11. Use only PVC type electrical tape to fasten Wrap-On resistance pipe heating cable to pipe because this type will stretch and shrink with temperature changes. Any tape which does not stretch shall not be used. (See figure 11.)
12. Do not rush the installation of the Wrap-On resistance pipe heating cable. The appropriate materials to be used in installation include PVC type electrical tape, fiberglass pipe insulation, vapor seal, a file or emery cloth, a tape measure, a small knife or scissors, a marking pen or a pencil, and a piece of cardboard to make a template. Additional protective items may include goggles or eyeglasses, gloves, and a dust mask. All materials to be used should be on hand before work is begun.
13. Wrap-On resistance pipe heating cable shall not be energized while coiled. A cold unit will be stiff - once the unit has been completely straightened, it may be energized to facilitate installation in cold weather. (See figure 13.)

INSTALLATION INSTRUCTIONS

14. Examine the pipe to be protected for burrs, sharp edges, or pointed objects; remove with file or emery cloth. Remove any previous insulation and/or pipe heating cable.
15. For your convenience and easier installation, mark the pipe at measured wrapping intervals.
16. Place flat side of Wrap-On resistance pipe heating cable against pipe, do not twist.

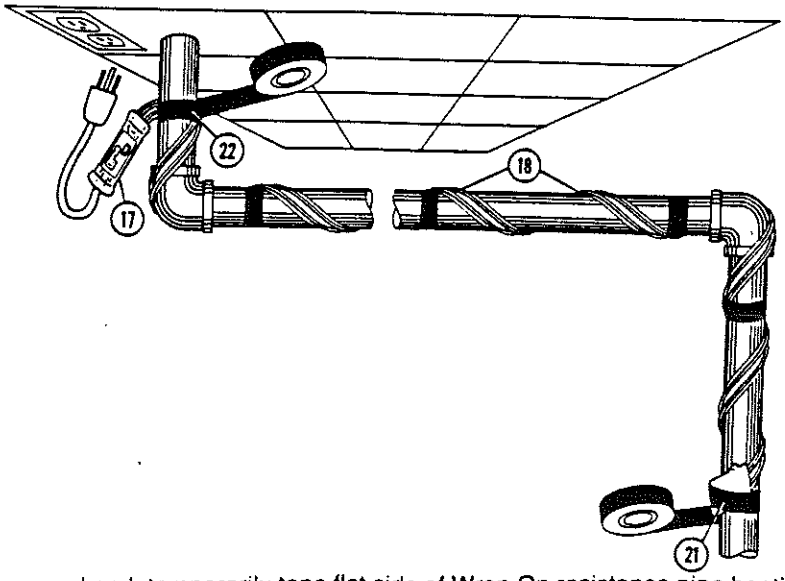

17. Starting at the power cord end, temporarily tape flat side of Wrap-On resistance pipe heating cable against pipe. Pilot lamp in clear pod will be more visible when in use if thermostat pod angles down in a convenient position as illustrated. (See figure 17.)

18. Apply Wrap-On resistance pipe heating cable loosely around pipe between pipe hangers or supports, if any. Maintain orientation of flat side against pipe, do not twist. (See figure 18.)
19. Returning to power cord end, verify correct spacing between turns with tape measure or marking on pipe, and adjust pipe heating cable against pipe surface.
20. If three feet or less of unit remains unused, uniformly readjust the spacing of turns along entire length in order to have all the Wrap-On resistance pipe heating cable against pipe surface. If excess is over three feet, an alternate selection shall be made as stated in #5 above.
21. Temporarily wrap two turns of PVC electrical tape around Wrap-On resistance pipe heating cable and pipe at end opposite power cord. (See figure 21.)

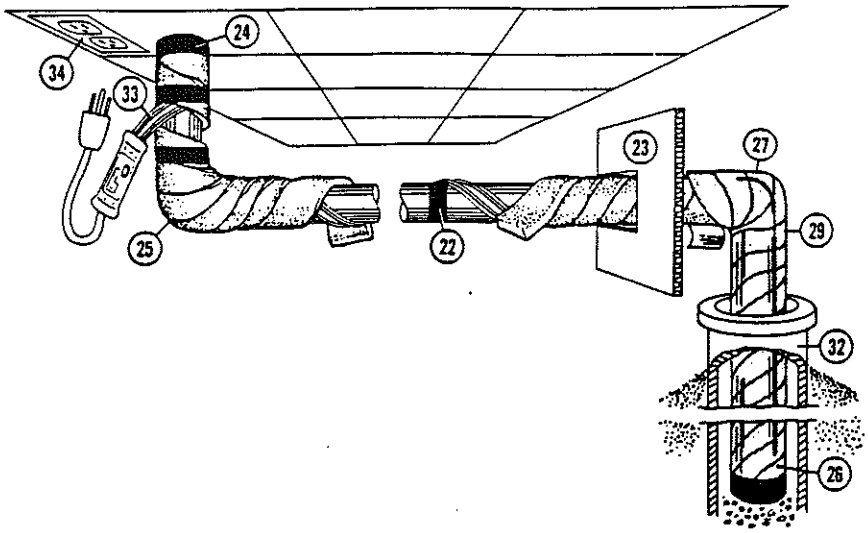

22. Return to power cord end. Remove temporary PVC electrical tape allowing Wrap-On resistance pipe heating cable to assume correct angle. Apply two turns of PVC electrical tape. (See figure 22.) Do not stretch PVC electrical tape, use only tension sufficient to hold Wrap-On resistance pipe heating cable in place against pipe. Proceed along pipe, taping every six to eight inches, same as above. Keep resistance pipe heating cable flat side against pipe allowing no twisting. Remove temporary tape at end opposite power cord and allow Wrap-On resistance pipe heating cable to assume correct angle and length and apply final two turns of PVC electrical tape.
23. Next prepare a template to assist with proper insulation. Measure diameter of the pipe and add twice the maximum recommended fiberglass thickness (once for each side of pipe). Cut an opening of this size in a piece of cardboard. (See chart at #4.) Use this opening as a gauge to check installed thickness of fiberglass along the pipe. (See figure 23.)

⚠ **DO NOT OVER INSULATE.**

24. Attach end of fiberglass roll to pipe with PVC electrical tape. When working overhead or in a confined area, the protective equipment mentioned in #12 above is recommended. (See figure 24.)
25. Apply fiberglass around pipe, overlapping or doubling back to achieve thickness according to template. **NOTE:** Wrap loosely; compressing fiberglass pipe insulation decreases its insulating ability. Fasten the end of each roll or piece of fiberglass pipe insulation with two very loose turns of PVC electrical tape. (See figure 25.)
26. Apply the thin plastic vapor seal by wrapping over the fiberglass pipe insulation along length of protected pipe, overlapping one-quarter (1/4) to one-half (1/2) inch. Wrap upwards from bottom so that vapor seal could shed water on vertical portions of pipe. (See figure 26.)
27. Go back to starting point and adjust coverage pulling up only enough to touch fiberglass pipe insulation gently. Do not compress fiberglass pipe insulation. Secure ends with two loose turns of PVC electrical tape. (See figure 27.) Add a strip of PVC electrical tape along length to hold vapor seal in place if installed in windy location.
28. Fiberglass pipe insulation will not protect the pipe if wet. If the fiberglass pipe insulation is found to be wet, remove outer covering and allow to dry or replace. Be sure to adequately protect fiberglass pipe insulation from weather.
29. Vapor seal material is designed only to protect fiberglass pipe insulation from humidity in the air such as in a basement, crawl space, or under a mobile home. The vapor seal material is not meant to protect fiberglass pipe insulation from direct exposure to the elements. If a portion of the protected pipe is exposed to weathering, it shall have additional protection such as stove pipe or heavier materials as required.
30. The installed Wrap-On resistance pipe heating cable shall be protected from any possible physical abuse. If external abuse is possible, installation shall be protected with metal sheathing such as stove pipe or heavier materials as required.
31. If installed near loose or blown insulation, such material shall be kept away from protected pipe and its fiberglass pipe insulation and vapor seal. Use metal stove pipe sleeve if necessary. Avoid excess insulation. Building insulation shall not be used.
32. If protected pipe extends below ground level as many do, dig a dry well around pipe, apply pipe heating cable to frost line or slightly below. Apply fiberglass pipe insulation as directed above to same depth. Create an earth dam around the dry well and use noncombustible weatherproof cap to prevent rain, splash, or runoff groundwater entry into dry well. In difficult situations, a piece of soil pipe may be desired as a sleeve or liner. (See figure 32.) Empty space in liner shall not be filled with combustibles.

33. Where Wrap-On resistance pipe heating cable leaves pipe to connect to power supply, a one inch gap shall be left in insulation material to prevent overheating. Long term overheating may make the plastic body brittle causing it to fracture due to any motion at that point. Short term overheating with extra insulation at that point may melt plastic body and cause Wrap-On resistance pipe heating cable to fail. (See figure 33.)
34. Electrical power supply shall be connected to a permanently installed receptacle as required by your local building code and/or the National Electrical Code (NEC). If this is a MOBILE HOME installation, pipe heating cable shall be energized by a receptacle within two feet of the water supply inlet pipe connection as required by HUD. Refer to Articles 210, 300, 422, and 550 of the National Electrical Code for minimum requirements for all installations. Ask a licensed electrician or your fire department if in doubt. **DO NOT USE AN EXTENSION CORD. (See figure 34.)**
35. The pilot lamp will glow only when the thermostat (within the clear plastic pod) senses the need for added heat, at temperatures near and below freezing.
36. At temperatures close to freezing, the pilot lamp and pipe heating cable will not be energized continuously, but will blink intermittently; as temperature decreases blinking will stop. Final testing, just before packaging, verified operation of pipe heating cable and pilot lamp at correct temperature.
37. As with any electrical device, care must be exercised and manufacturer's instructions followed.
38. Return to step #1 and begin work.

MAINTENANCE INSTRUCTIONS

39. Installation shall be inspected for possible damage at least once every three months, especially after windstorms. Begin by disconnecting the power cord. A check can be made without removing the fiberglass pipe insulation by feeling the cable to verify that the installation has remained secure. Check for wet fiberglass pipe insulation (especially if the insulation has been exposed to weather); if unsure, remove portions of vapor seal or other protective coverings for examination. Be especially alert to damage caused by physical abuse, accidental contact, or chewing by animals. Pipe heating cables contain no serviceable parts, therefore damaged pipe heating cables shall be replaced. When inspection and/or replacement is complete, reconnect to power if appropriate.
40. Disconnect Wrap-On resistance pipe heating cable from power source when freezing season ends.

WRAP-ON COMPANY, INC.
LIMITED WARRANTY

Wrap-On Company, Inc. warrants all heat tapes, gutter cables, soil heating cables, and thermostats against all defects in material or workmanship for a period of one year from the date of purchase when installed according to manufacturer's instructions set forth on product packaging and enclosures. Use of the product is limited to voltages between 110 and 120 volts AC.

Wrap-On Company, Inc. will repair or replace defective products covered by this warranty provided they are returned postage or shipping prepaid to:

WRAP-ON COMPANY, INC.
Warranty Dept.
5550 West 70th Place
Chicago, Illinios 60638
Phone: 1-800-621-6947
708-496-2150

Please enclose a brief description of the problems you have experienced with the product together with your warranty information below or original purchase receipt.

ALL IMPLIED WARRANTIES, INCLUDING WARRANTIES OF MERCHANTABILITY AND FITNESS FOR PARTICULAR PURPOSES, ARE LIMITED IN DURATION TO THE LENGTH OF THIS WARRANTY.

EXCLUSION OF CERTAIN DAMAGES: WRAP-ON COMPANY, INC.'S LIABILITY FOR ANY DEFECTIVE PRODUCT IS LIMITED TO THE REPAIR OR REPLACEMENT OF SAID PRODUCT, AT OUR OPTION, AND SHALL NOT INCLUDE DAMAGES OF ANY KIND, WHETHER INCIDENTAL, CONSEQUENTIAL, OR OTHERWISE. SOME STATES DO NOT ALLOW LIMITATIONS OF HOW LONG AN IMPLIED WARRANTY LASTS AND/OR CONSEQUENTIAL DAMAGES, SO THE ABOVE LIMITATIONS AND EXCLUSIONS MAY NOT APPLY TO YOU.

RECORD OF PURCHASE

Date Purchased_____

Purchased From_____

Installed By_____

Date Installed_____

FORM #30565. ASFC 3/91

Honeywell

FLAME DETECTOR RELAY

THE R7023B,C ARE FLAME DETECTOR RELAYS WHICH, IN ADDITION TO FLAME DETECTION, MAY BE USED TO SIGNAL THE PRESENCE OF ANY SOURCE OF ULTRAVIOLET (UV) LIGHT, INCLUDING ELECTRIC ARCS IN GENERATORS, MOTORS, AND SWITCHING GEAR. THESE RELAYS CAN ALSO BE USED TO SIGNAL THE INTERRUPTION OF A CONSTANT SOURCE OF UV.

□ When used as an optical detector, the R7023B,C Flame Detector Relays can sense the presence of clear glass and plastic objects which visible light detectors cannot. Ultraviolet light will not pass through clear glass or plastic.

□ The R7023 is a flame detector relay only. Suitable primary control must be used to provide safe-start check, safety lockout, load switching, and other required functions in flame safeguard systems.

□ The R7023B is used with a rectification type flame detector—either a flame rod, photocell, or C7012A,C Ultra-Vision Flame Detector (Purple Peeper); it provides double-pole, double-throw switching.

□ The R7023C is used with a C7027A or C7035A Ultra-Vision Flame Detector (Minipeeper) and provides single-pole, double-throw switching.

□ Control mounts compactly on the Q270A1024 Universal Subbase with captive mounting screws which also complete electrical connections.

□ Test jack in the flame detector network permits direct reading of the flame current.

□ Built-in protection against ignition crossover prevents damage to the R7023B electronic network when a flame rod is used to detect a spark-ignited pilot.

□ Lexan thermoplastic base practically eliminates breakage.

□ Optional minus 40 F [minus 40 C] rating available on R7023C.

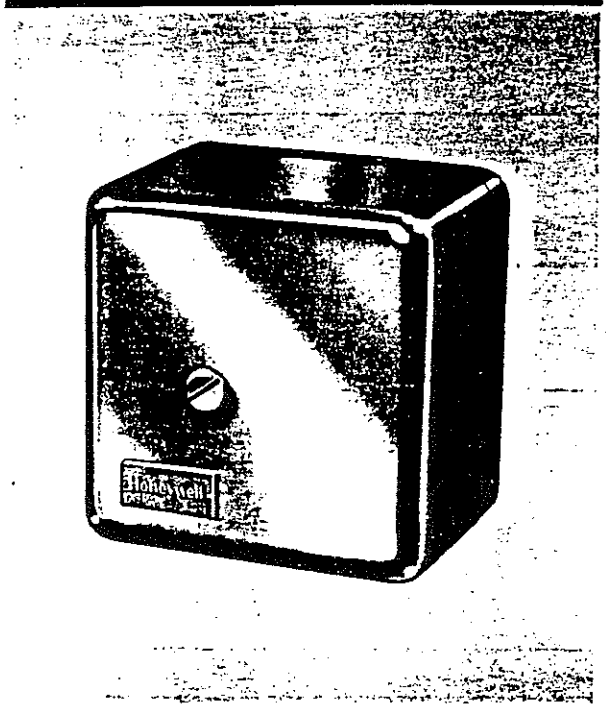

R7023B,C

R.L.
REV. 7-77 (.03)

Form Number 60-2298—1

SPECIFICATIONS

MODEL:
- R7023B Flame Detector Relay—for use with rectification flame detectors.
- R7023C Flame Detector Relay—for use with C7027A or C7035A Flame Detectors.

VOLTAGE AND FREQUENCY: 120, 208, 220, 240V ac; 50/60 Hz.

CONTACT RATINGS (pilot duty): 125 VA.

FLAME RESPONSE TIMING: 0.8 or 3 seconds (nominal).

AMBIENT TEMPERATURE RATING: Minus 20 to plus 125 F [minus 12 to plus 52 C]. Optional minus 40 F [minus 40 C] rating available on R7023C.

FLAME DETECTOR REQUIRED:
- R7023B—Rectifying flame rod, photocell, or C7012A, C Ultra-Vision Flame Detector (Purple Peeper).
- R7023C—C7027A or C7035A Ultra-Vision Flame Detector (Minipeeper).

DIMENSIONS: Approximately 5 x 5 x 4-3/4 in. [127 x 127 x 120.7 mm] including subbase.

MOUNTING BASE: Q270A1024 Universal Subbase. Order separately.

ACCESSORIES:
1. W136A Microammeter (includes 117053 Plug).
2. 121708 Rectification Flame Simulator.
3. 123514B Ultraviolet Flame Simulator.
4. 117053 Meter Connector Plug.
5. FSP1535 Tester.

LISTINGS:
- R7023C is Underwriters Laboratories Inc. Component Recognized: File No. MP268, Vol. 7; Guide No. MCCZ2.
- R7023B and C are Canadian Standard Association Certified: File No. LR1620.

INSTALLATION

CAUTION

1. Disconnect all power before beginning the installation to prevent electrical shock or equipment damage.
2. Only a trained, experienced flame safeguard control serviceman should install or service this device.
3. All wiring must comply with applicable codes, ordinances, and regulations.

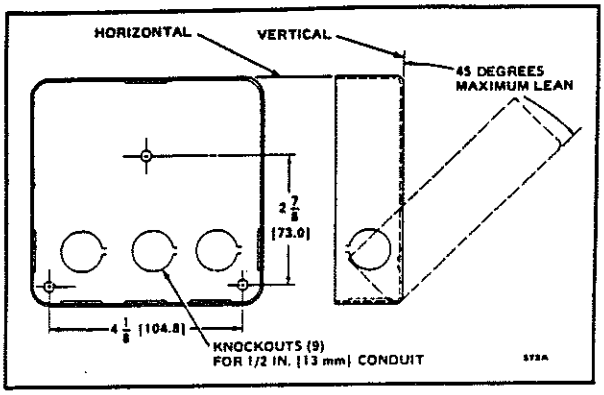

FIG. 1—APPROXIMATE SUBBASE DIMENSIONS IN INCHES [MILLIMETRES IN BRACKETS].

(continued on page 3)

ORDERING INFORMATION

WHEN PURCHASING REPLACEMENT AND MODERNIZATION PRODUCTS FROM YOUR TRADELINE WHOLESALER OR YOUR DISTRIBUTOR, REFER TO THE TRADELINE CATALOG OR PRICE SHEETS FOR COMPLETE ORDERING NUMBER, OR SPECIFY—

1. **Order number.**
2. **Voltage and frequency.**
3. **Mounting subbase Q270A.**
4. **Flame detector, if required.**
5. **Accessories, if desired.**

IF YOU HAVE ADDITIONAL QUESTIONS, NEED FURTHER INFORMATION, OR WOULD LIKE TO COMMENT ON OUR PRODUCTS OR SERVICES, PLEASE WRITE OR PHONE:

1. **YOUR LOCAL HONEYWELL RESIDENTIAL DIVISION SALES OFFICE (CHECK WHITE PAGES OF PHONE DIRECTORY).**
2. **RESIDENTIAL DIVISION CUSTOMER SERVICE**
   HONEYWELL INC., 1885 DOUGLAS DRIVE NORTH
   MINNEAPOLIS, MINNESOTA 55422 (612) 542-7500

   (IN CANADA—HONEYWELL CONTROLS LIMITED, 740 ELLESMERE ROAD, SCARBOROUGH, ONTARIO M1P 2V9)
   INTERNATIONAL SALES AND SERVICE OFFICES IN ALL PRINCIPAL CITIES OF THE WORLD.

Honeywell

Q270A
UNIVERSAL MOUNTING BASE

APPLICATION

The Q270A1024 is a mounting base with wiring terminals for use with the RA890E,F,G,H,J,K; R485B; R4795A,C,D; and R7023B,C Flame Safeguard Relays. It replaces the following mounting bases.

MOUNTING BASE	USED WITH
Q267A1004	R485B; R7023B,C; R4795A,C,D
Q270A1008	RA890E,F
Q270B1007	RA890G

The Q270A1032 is the same except that it has a marked ground terminal for international applications. It is not listed by Underwriters Laboratories Inc.

INSTALLATION

Follow the burner manufacturer's instructions, if provided. Otherwise, proceed as follows.

MOUNTING

Locate the subbase where it is within the ambient temperature rating of the flame safeguard control to be used. (Refer to the appropriate device instruction sheet.)

Mount the subbase so that the top and bottom are horizontal and the back is vertical. The subbase may lean backward as much as 45 degrees if necessary. See Fig. 1.

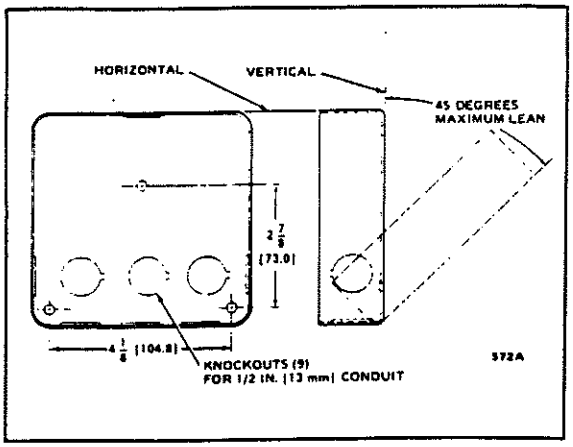

Fig. 1—Q270A installation dimensions in inches (millimetres shown in brackets).

TERMINAL LABELS

Terminals 6, T, and T are also labeled 8, 7, and 6.

The 6, T, and T designations (white) apply to the RA890.

The 8, 7, and 6 designations (yellow) apply to the R485, R7023, and R4795.

WIRING

CAUTION

1. Disconnect power supply before making wiring connections to prevent electrical shock and equipment damage.
2. All wiring must comply with applicable codes, ordinances, and regulations.
3. All wiring to the mounting base, including that to the controller (T-T) and the flame detector (F-G), must be NEC Class 1.
4. Refer to the instruction sheet on the control to be installed for complete wiring hookups.

For *normal installations,* use moisture-resistant No. 14 wire (rated for 194 F [90 C] or higher required by Underwriters Laboratories Inc.).

For *high temperature installations,* use moisture-resistant No. 14 wire, selected for a temperature rating above the maximum operating temperature, for all but the ignition and flame detector "F" leadwires.

—*For the ignition,* use Honeywell Spec. No. R1061012 Ignition Cable or equivalent. (This wire is rated at 350 F [175 C] for continuous duty, and up to 500 F [260 C] for intermittent use.)

—*For the flame detector "F" leadwire,* use Honeywell Spec No. R1298020 or equivalent. (This wire is rated up to 400 F [205 C] for continuous duty. It is tested for operation up to 600 volts and breakdown up to 7500 volts.)

IMPORTANT

Do not run high voltage ignition transformer wires in the same conduit with the flame detector wiring.

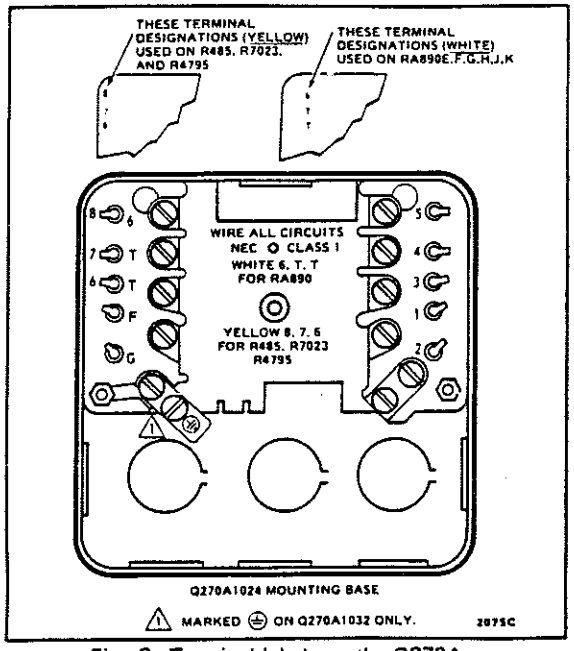

Fig. 2—Terminal labels on the Q270A.

HONEYWELL MINNEAPOLIS MINN 55408 INTERNATIONAL Sales Offices in all principal cities of the world Manufacturing in Australia, Canada, Finland, France, Germany, Japan, Mexico Netherlands Spain Taiwan United Kingdom, U S A

PRINTED IN U S A

J.B.
Rev. 7-75 (.014)

Form Number
95-6844—5
Residential Div.

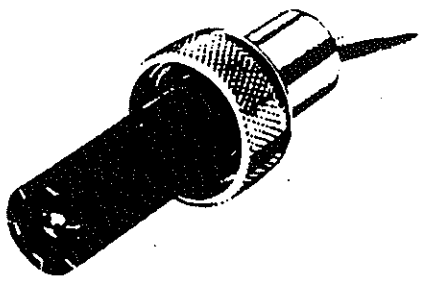

C7035A MINIPEEPER ULTRAVIOLET FLAME DETECTOR

Compact flame detector for use with RA890G, R7023C, R4795, R4126, R4127, R4075, R4138, R4150, R4140 and BC7000 flame safeguard controls with ultraviolet amplifiers.

Used on gas, oil, coal, or combination burners. Detects ultraviolet radiation from all flames. Sensing tubing is field replaceable. Mounting Means: Integral collar for 1 in. NPT sighting pipe. Dimensions: 1-1/2 in. (38.1 mm) diameter (mounting collar), 4-1/8 in. (104.8 mm) long. Listed by Underwriters Laboratories Inc., File No. MP268, Guide No. MCCZ; Industrial Risk Insurers (formerly FIA) approvable; Canadian Standards Association certified, File No. LR1620, Guide No. 140-A-2; Factory Mutual approved Report No. 24181.03.

Replacement Parts

129808 Flange Gasket.
129464M Ultraviolet Sensing Tube [0°F to 250°F (−18°C to +121°C)].
129464N Ultraviolet Sensing Tube [−40°F to +250°F (−40°C to +121°C)].

ORDER NUMBER	AMBIENT TEMP. RANGE		LEAD LENGTH	
	°F	°C	FT	M
C7035A1023	0 to +250	−18 to +121	6	1.8
C7035A1031	−40 to +250	−40 to +121	6	1.8
C7035A1056	−40 to +250	−40 to +121	12	3.5
C7035A1080[a]	0 to +250	−18 to +121	6	1.8

[a]600°F 6 ft. leadwires.

Honeywell

C7027A, C7035, C7044A Minipeeper Ultraviolet Flame Detectors

The C7027A, C7035A and C7044A detect the ultraviolet radiation emitted by combustion flames. The flame detectors are used with Honeywell flame safeguard controls to provide flame supervision for gas, oil, or combination gas-oil burners.

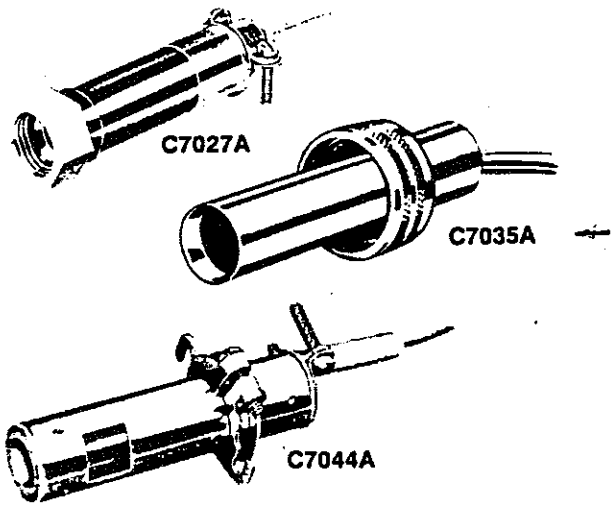

- C7027A, C7035A, and C7044A Flame Detectors are used with R7249A, R7290A, R7749B and R7849A,B amplifiers and the appropriate Honeywell controls.
- C7044A may also be used with the following 50 Hz Honeywell combustion controls/amplifiers:
  R4341/R7323
  R4343/R7323
  R4344/R7323
- C7027A has an integral collar threaded (internal 1/2-14 NPSM) for mounting on a 1/2-inch sight pipe.
- C7035A has an integral collar threaded (internal 1-11-1/2 NPSM) for mounting on a one inch sight pipe.
- C7035A housing meets Underwriters Laboratories Inc. requirements for raintightness and complies with NEMA enclosure standards, types 4 and 4X.
- C7044A mounts with a two screw bracket. The UV sensor tube is enclosed in a stainless steel housing.
- C7044A has the capability of side or end viewing in flame monitoring applications.
- Because of their compact size, the C7027A and C7044A are particularly suitable for blast tube mounting.
- Properly installed the C7027A and C7035A are pressure rated for 5 psi.
- C7035A ultraviolet radiation sensor tube is field replaceable.
- Two C7027A, C7035A, or C7044A flame detectors can be wired in parallel for difficult flame sighting installations.

CONTENTS

Specifications 2
Ordering Information 2
Installation 4
Adjustments and Checkout 7
Troubleshooting 10
Maintenance 10

F.P. • Rev. 11-91 • ©Honeywell Inc. 1991 • Printed in U.S.A. • Form Number 60-2026—7

Specifications

SUPER TRADELINE MODELS

SUPER TRADELINE models offer features not available on TRADELINE or standard models, and are designed to replace a wide range of Honeywell and competitive controls. SUPER TRADELINE models are selected and packaged to provide ease of stocking, ease of handling, and maximum replacement value. Specifications of SUPER TRADELINE models are the same as those of standard models except as noted below.

SUPER TRADELINE MODEL AVAILABLE:
C7027A1080—includes C7027A1023 Detector, 136733 Heat Block, and 390427B Bushing.

SUPER TRADELINE FEATURES:

- Heat block for insulating the detector from sight pipe temperatures above 215° F [102° C] up to 266° F [130° C].
- Bushing for mounting the detector on a 3/8 in. sight pipe.
- SUPER TRADELINE pack with cross reference label and Instructions, form 60-0638.

STANDARD MODELS

C7027A MINIPEEPER ULTRAVIOLET FLAME DETECTOR

AMBIENT OPERATING TEMPERATURE RATINGS: 0° F to 215° F [-18° C to 102° C], or -40° F to 215° F [-40° C to +102° C], depending on model.

MAXIMUM PRESSURE RATING: 5 psi [34.5 kPa].

MOUNTING: Collar with 1/2-14 NPSM internal threads for mounting on a 1/2 in. sight pipe.

WIRING CONNECTIONS: Two 6 ft [1.83 m], color-coded, NEC Class 1 leadwires. (One model is available with 24 ft [7.32 m] leadwires.) Rear of detector has a clamp type connector for 1/2 in. flexible metallic conduit. (Models are available with 1/2 in. internally threaded spud connector instead of the clamp.)

DIMENSIONS: See Fig. 1.

REPLACEMENT PART: 129685 Flange Gasket.
NOTE: The ultraviolet radiation sensing tube is not field replaceable.

ACCESSORY: 136733 Heat Block, laminated plastic, for insulating the flame detector from sight pipe temperatures up to 266° F [130° C], 1/2-14 NPSM external threads on one end and 1/2-14 NPSM internal threads on the other end (see Fig. 5).

Fig. 1—Installation dimensions of C7027A, in in. [mm in brackets].

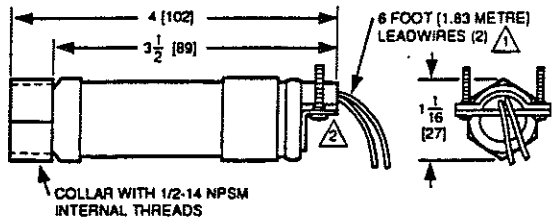

1 MODEL AVAILABLE WITH 24 FOOT [7.32 METRE] LEADWIRES.

2 MODELS AVAILABLE WITH SPUD CONNECTOR (1/2-14 NPSM INTERNAL THREADS) INSTEAD OF CLAMP TYPE CONNECTOR. M1943

Ordering Information

When purchasing replacement and modernization products from your Flame Safeguard Authorized Distributor, refer to the TRADELINE® Catalog or price sheets for complete ordering number, and specify:

1. Order number.
2. Operating temperature range.

ORDER SEPARATELY:

1. Replacement parts, if desired.
2. Accessories, if desired.

If you have additional questions, need further information, or would like to comment on our products or services, please write or phone:

1. Your local Honeywell Residential and Building Controls Division Sales Office (check white pages of phone directory).
2. Residential and Building Controls Division Customer Satisfaction
   Honeywell Inc., 1885 Douglas Drive North
   Minneapolis, Minnesota 55422-4386 (612) 542-7500

   (In Canada—Honeywell Limited/Honeywell Limitee, 740 Ellesmere Road, Scarborough, Ontario M1P 2V9) International Sales and Service offices in all principal cities of the world. Manufacturing in Australia, Canada, Finland, France, Germany, Japan, Mexico, Netherlands, Spain, Taiwan, United Kingdom, U.S.A.

Installation

CAUTION

Ultraviolet radiation sensing tubes have a life expectancy of 40,000 hours of continuous use within the flame detector's specified ambient temperature and voltage ratings. Wearout of an ultraviolet radiation sensing tube results in failure of the UV sensor to properly discriminate between flame conditions.

The C7027A, C7035A and C7044 flame detectors should only be used on burners that cycle on-off at least once every 24 hours. Appliances with burners that remain on continuously for 24 hours or longer should use the C7012E Dynamic Self-Check Flame Detector with R7247C, R7747C or R7847C amplifiers and the appropriate Honeywell flame safeguard control. For highest sensitivity requirements, the C7076A,D Flame Detectors with the R7476A or R7886A Dynamic Self-Check Amplifiers and the appropriate Honeywell flame safeguard control should be used.

WHEN INSTALLING THIS PRODUCT...

1. Read these instructions carefully. Failure to follow them could damage the product or cause a hazardous condition.
2. Check the ratings given in the instructions and on the product to make sure the product is suitable for your application.
3. Installer must be a trained, experienced, flame safeguard control technician.
4. After installation is complete, check out product operation as provided in these instructions.

CAUTION

1. The C7027A, C7035A and C7044A Flame Detectors must be used with Honeywell flame safeguard controls (primaries, programmers, multiburner systems, and burner management systems). Using with controls not manufactured by Honeywell could result in unsafe conditions.
2. Disconnect power supply before beginning installation to prevent electrical shock or equipment damage, more than one disconnect may be involved.
3. Read the installation instructions before starting the installation.
4. All wiring must be NEC Class 1 (line voltage).
5. The flame detector must be positioned so that it sights the flame and does not respond to the UV radiation emitted by sparks generated by a spark ignitor. The Q624A solid-state igniter may be useful in difficult installations.

BASIC REQUIREMENTS FOR ULTRAVIOLET DETECTOR INSTALLATIONS

All flames emit ultraviolet radiation, invisible to the human eye but detected by the UV sensing tube. There are two important factors in UV detector installation:

1. The detector must have a line-of-sight view of the flame.
2. The detector must not be exposed to other sources of ultraviolet radiation, the most common being ignition spark. Other sources are listed in the next section.

Because it is necessary for the detector to actually *see* the flame, it is desirable to locate the detector as close to the flame as physical arrangement and temperature restrictions permit.

Sighting requirements for different types of flame supervision are:

1. Pilot flame only—Sighting must be along the axis of the pilot flame. The smallest pilot flame that can be sighted must be capable of igniting the main burner (see Pilot Turndown Test, page 9).
2. Main flame only—Sighting must be at the most stable part of the flame for all firing rates.
3. Pilot and main flame—Sighting must be at the junction of both flames.

OTHER RADIATION SOURCES SENSED BY THE UV DETECTOR

Examples of radiation sources (other than flame) that could actuate the detection system are:

Ultraviolet Sources:

Hot refractory above 2800° F [1371° C].
Spark:
- ignition transformers.
- welding arcs.
- lightning.

Gas lasers.
Sun lamps.
Germicidal lamps.

Gamma Ray and X-ray Sources:

Diffraction analyzers.
Electron microscopes.
Radiographic X-ray machines.
High voltage vacuum switches.
High voltage condensers.
Radioscotopes.

Except under unusual circumstances, none of these sources except hot refractory and ignition spark would be present in or near the combustion chamber.

The detector *may* respond to hot refractory above 2800° F [1371° C] if the refractory surface represents a significant percentage of the field of view of the detector. If the temperature of the hot refractory causes the flame relay (in the flame safeguard control) to pull in, re-position the sight pipe so the detector views a cooler area of the refractory.

C7035A MINIPEEPER ULTRAVIOLET FLAME DETECTOR

FLAME DETECTION: End viewing.

AMBIENT OPERATING TEMPERATURE RATINGS: 0° F to 250° F [-18° C to 121° C], or -40° F to 250° F [-40° C to 121° C], depending on model.

MAXIMUM PRESSURE RATING: 5 psi [34.5 kPa].

MOUNTING: Collar with 1-11-1/2 NPSM internal threads for mounting on a 1 in. sight pipe. (The DIN approved C7035A1064 has 1-11 BSP.P1 threads.)

WIRING CONNECTIONS: Two 6 ft. [1.83 m], color-coded NEC Class 1 leadwires rated for 600° F [204° C]. One model is available with 12 ft. [3.66 m] leadwires. Rear of detector has 1/2-14 NPSM internal threads for connecting to a conduit. The DIN approved C7035A1064 has 1/2-14 BSP-F threads.

DIMENSIONS: See Fig. 2.

Fig. 2—Installation dimensions of C7035A, in in. [mm in brackets].

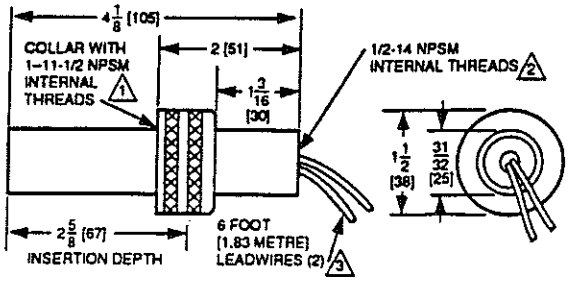

1 DIN APPROVED C7035A1064 HAS 1-11 BSP.P1 INTERNAL THREADS.

2 DIN APPROVED C7035A1064 HAS 1/2-14 BSP-F INTERNAL THREADS.

3 MODEL AVAILABLE WITH 12 FOOT [3.66 METRE] LEADWIRES. M1945

REPLACEMENT PARTS:

129808 Flange Gasket.

129464M Ultraviolet Sensing Tube, 0° F to 250° F [-18° C to 121° C].

129464N Ultraviolet Sensing Tube, -40° F to 250° F [-40° C to 121° C].

C7027A AND C7035A

APPROVALS:

Underwriters Laboratories Inc. listed: File No. MP268.

Canadian Standards Association certified: Master Report LR 95329-1.

Factory Mutual approved.

Industrial Risk Insurers acceptable.

DIN approved models: C7027A1056, C7035A1049, C7035A1064.

ACCESSORIES:

118367A Swivel Mount; provides adjustable positioning of the C7027A or C7035A.

C7044A MINIPEEPER ULTRAVIOLET FLAME DETECTOR

DETECTION: Housing has two openings to permit either side or end viewing. Side viewing is 1/8 as sensitive as end viewing.

AMBIENT OPERATING TEMPERATURE RATINGS: 0° F to 215° F [-18° C to 102° C].

MOUNTING: Bracket (included in 4074 BVK Bag Assembly), secured by two 8-32 RHIS (European M-4) screws (not included).

WIRING CONNECTIONS: Two 6 ft. [1.83 m], color-coded, NEC Class 1 leadwires. Rear of detector has a clamp type connector for 1/2 inch flexible metallic conduit.

DIMENSIONS: See Fig. 3.

Fig. 3—Installation dimensions of C7044A, in in. [mm in brackets].

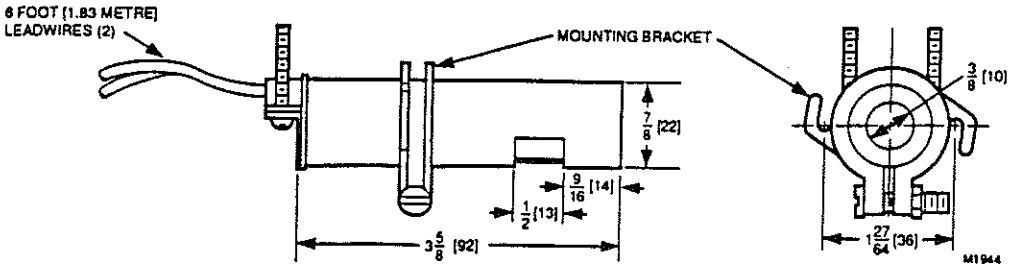

Ignition spark is a source of ultraviolet radiation. *When installing the C70217A, C7035A, or C7044A Flame Detector, make sure it does not respond to ignition spark (see Ultraviolet Response Test, page 9.)* If the installation is such that response to the ignition sparks cannot be avoided, the Q624A solid-state ignition transformer may eliminate the ignition spark response. The Q624A, when properly installed, prevents C7027A, C7035A, and C7044A ignition spark response by alternately activating the spark generator and the UV sensing tube.

MOUNTING A C7027A OR C7035A

LOCATE THE SIGHT PIPE

The location of the sight pipe is the most critical part of the installation. A black iron pipe is recommended. Do *not* use a stainless steel or galvanized pipe because its internal surface blackens with use as deposits from the combustion chamber settle on it. Initially, its shiny internal surface reflects ultraviolet radiation, which could result in a satisfactory flame signal, even though the pipe may be improperly located. As it blackens, less ultraviolet radiation is reflected and the flame signal may become marginal.

Under optimum sighting conditions, the C7027A and C7035A Flame Detectors can detect most common gas and oil combustion flames at a distance of six feet. The critical factors in determining the flame–detector distance separation are the optimized flame signal (current or voltage) and the flame detector temperature. Other factors may be influential and are associated with the specific installation. For minimum flame signals, see Table 1 and for ambient operating temperatures, refer to Specifications, page 2.

Use 1/2 in. pipe for a C7027 and 1 in. pipe for a C7035. Since no two situations are likely to be the same, length and sighting angle of the pipe must be determined at the time and place of installation. Generally, it is desirable to have the sight pipe tilting downward to prevent soot or dirt buildup.

If a C7027A is to be used for a blast tube installation, its location should be determined by the burner manufacturer; contact the manufacturer before making any modifications to the installation.

In locations where water is usually sprayed on the body of the detector, use a C7035A. Internal threads in its base permit the use of waterproof flexible conduit for this type of application.

PREPARE HOLE IN WALL OF COMBUSTION CHAMBER

Cut a hole of the proper diameter for the sight pipe in the wall of the combustion chamber at the selected location. Flare the hole to leave room for small adjustments of the sighting angle. The taper of the hole should be about 1 in. for every 3 in. [25 mm for every 76 mm] of wall thickness.

MOUNTING THE SIGHT PIPE (FIG. 4)

Thread one end of the pipe to fit the mounting collar on the detector. Cut the pipe to the desired length (as short as practicable), and at an angle so it fits flush with the wall of the combustion chamber. Tack weld the pipe to the wall in a trial position. *Do not permanently weld the sight pipe in place until after completing the Adjustments and Checkout beginning on page 7.*

NOTE: If you use a swivel mount (part no. 118367A) and you are *positive* about the location and sighting angle, you can permanently weld the pipe.

Fig. 4—Mounting sight pipe.

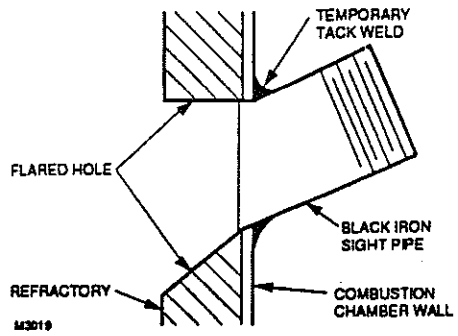

SIGHT PIPE VENTILATION

It may be necessary to ventilate the sight pipe to cool the flame detector or to clear the sight pipe of UV radiation absorbing substances such as smoke, excessive moisture or, in some instances, unburned fuel.

For a negative pressure combustion chamber, drilling a few holes in the section of the sight pipe outside of the combustion chamber will allow air at atmospheric pressure to flow through the sight pipe into the chamber. A perforated pipe nipple between the sight pipe and the detector can also be used (see Fig. 5).

Fig. 5—Mounting a C7027A on a combustion chamber (viewed from above). C7035A mounting is similar.

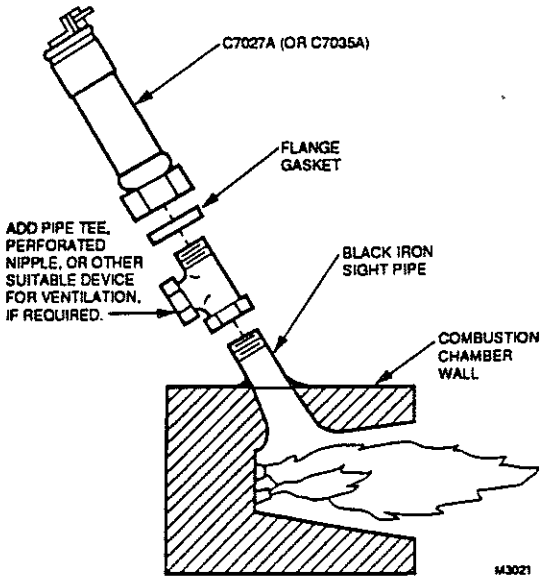

Fig. 6–Mounting dimensions of 136733 heat block, in in. [mm in brackets].

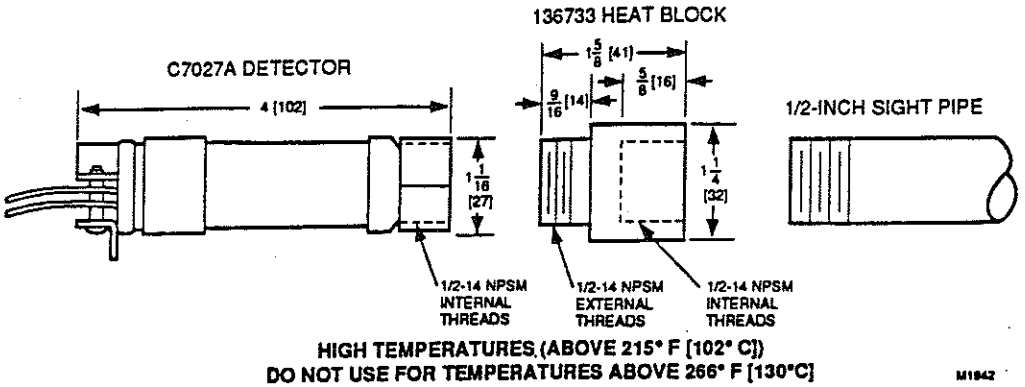

For a positive pressure combustion chamber, connect a supply of pressurized air from the burner blower through the sight pipe into the chamber. The supply air pressure must be greater than the chamber pressure.

SWIVEL MOUNT

To facilitate proper sighting of the flame, a swivel mount (part no. 118367A) is available. The swivel mount will require a 3/4 to 1/2 in. reducer and a 1/2 in. close nipple to mount a C7027A, or a 1 in. pipe at least 2-1/2 in. [63.5 mm] long to mount a C7035A. For mounting details, refer to form 60-0361 for the 118367A Swivel Mount.

USING A HEAT BLOCK WITH A C7027 (Fig. 6)

If the temperature of the sight pipe will become high enough to cause the C7027A to overheat (above 215° F [102° C] up to 266° F [130° C], screw a 136733 Heat clock (order separately) onto the sight pipe before mounting the detector.

MOUNT THE DETECTOR (Fig. 5)

Mount the detector onto the sight pipe, pipe tee, nipple, or other fitting. Make sure the flange gasket is in place inside the mounting collar on the detector, and then screw the collar onto the sight pipe or fitting.

NOTE: If a window is installed between the UV detector and the flame, it must be fabricated from quartz or fused silica. Ordinary glass filters out ultraviolet radiation.

MOUNTING A C7044A ON A BLAST TUBE (Fig. 7)

The C7044 is designed to be mounted on the blast tube of a burner. The exact location should be determined by the burner manufacturer. Contact the manufacturer before making any modifications to the installation.

⚠ CAUTION

The C7044 will allow air leakage through its housing. It should not be located in an atmosphere of fuel vapors under positive pressure. The C7027 or C7035 should be used if internal pressure sealoff is required.

Fig. 7—Mounting C7044A on blast tube.

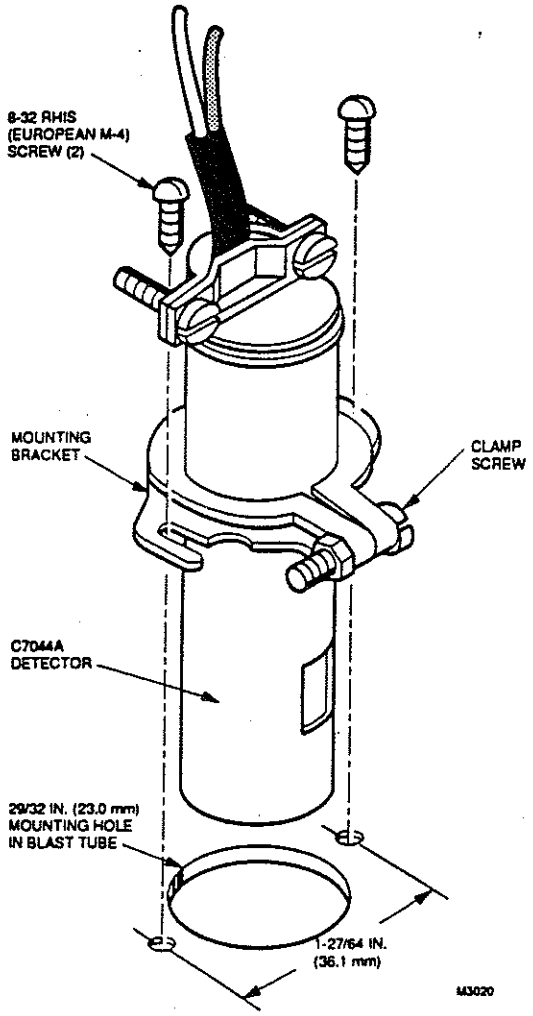

The C7044 is mounted in a 29/32 in. [23.0 mm] hole in the blast tube. The mounting bracket is fastened to the blast tube with 2 screws on 1-27/64 in. [36.1 mm] centers.

The mounting bracket is designed so that the detector can be removed from the blast tube for cleaning and then replaced without disturbing the sighting angle. Loosen the 2 screws holding the bracket to the blast tube, but do not loosen the clamp screw on the bracket. Twist both the bracket and detector to remove them.

WIRING (All Models—Fig. 8)

CAUTION

The *blue* (tan with blue tracer with C7035A1080) leadwire must be connected to the F terminal of the flame safeguard control subbase or terminal strip and the *white* (tan leadwire without blue tracer with C7035A1080) to the G terminal (see Fig. 8). Failure to observe the circuit polarity by reversing the leadwires (even momentarily) may cause the flame detector to improperly supervise the combustion flame.

1. Disconnect power supply before beginning installation to prevent electrical shock and equipment damage. All wiring must comply with applicable electrical codes, ordinances, and regulations. Use NEC Class 1 wiring.
2. If the leadwires are not long enough to reach the terminal strip or wiring subbase, make the required splices in a junction box.
3. If splicing is necessary, use moisture-resistant wire suitable for at least 167° F [75° C] if the detector is used with a flame safeguard *primary* control, or at least 194° F [90° C] if used with a flame safeguard *programming* control.
4. *For high temperature installations*, use Honeywell Specification no. R1298020 or equivalent for the F leadwire. (This wire is rated up to 400° F [204° C] for continuous duty. It is tested for operation up to 600V and breakdown up to 7500V.) For the other leadwires, use moisture-resistant wire selected for a temperature rating above the maximum operating temperature.

IMPORTANT: *Do not run the flame detector wiring in the same conduit with high voltage ignition transformer wires.*

CONNECTING DETECTORS IN PARALLEL

For a flame that is difficult to sight, using two flame detectors connected in parallel will reduce the occurrence of nuisance shutdowns. If only one of the parallel detectors loses the flame signal, the other will continue to indicate the presence of the flame and keep the burner in operation.

When the flame detectors are connected in parallel, the low level background signals are additive. *Therefore, no more than two C7027A, C7035A, or C7044A flame detectors should be paralled.* Furthermore, the background signal *increases* as temperature *decreases*. Because of this, the minimum ambient operating temperature must be increased when the C7027A, C7035A or C7044A flame detectors are paralled.

When using detectors rated for a minimum of 0° F [-18° C], limit the minimum ambient temperature at the detectors to 32° F [0° C]. When using detectors rated for a minimum of -40° F [-40° C], limit the minimum ambient temperature at the detectors to -10° F [-23° C].

Connect the *blue* leadwires of both detectors to the F terminal of the wiring subbase or terminal strip, and the *white* leadwires of both detectors to the G terminal, as shown in Fig. 8.

Fig. 8—Wiring C7027A, C7035A, and C7044A flame detectors in parallel.

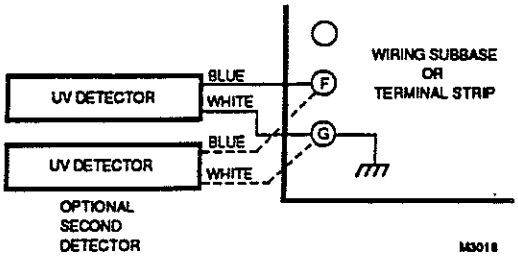

EARTH GROUND

The detector and the flame safeguard control must be connected to earth ground. A convenient method of accomplishing this is to connect the detector to the flame safeguard control with a flexible conduit, or ensure a good ground connection at the mounting bracket.

Adjustments and Checkout

Before welding the C7027A or C7035A sight pipe in its final location, or before tightening the C7044A clamp screw, complete both the adjustments and checkout tests that follow and any required by the burner manufacturer.

UV SENSOR TUBE TEST

NOTE: For initial burner lightoff, consult the burner manufacturer instructions or the instructions for the flame safeguard control.

During the initial burner lightoff, make sure the flame safeguard control starts (i.e., the load relay, usually 1K, pulls in). If it does not start, visually check the sensing tube in the C7027A, C7035A, or C7044A flame detector. If the tube continues to glow when no flame is present, replace the sensing tube (C7035A), or replace the detector (C7027A or C7044A).

ADJUST DETECTOR SIGHTING POSITION

With the flame detector installed and burners running, adjust the position of the flame detector for optimum flame signal. The flame signal will be read in microamps or voltage (Vdc) depending on the Honeywell flame safeguard combustion control used.

Most existing Honeywell flame safeguard controls incorporate a flame current jack on the flame amplifier or on the control itself. The flame signal can be measured with a volt-ohmmeter such as the Honeywell W136A. To measure the flame current (signal), use a cable connector (part number 196146, included with the W136A) must be used in conjunction with the meter. With the W136A (or equivalent) positioned at the zero to 25 microampere scale, make connections from the meter probes to the two ends of the cable connector plug (red to red, black to black). Make these connections before inserting the plug end of the connector plug into the flame jack of the control or control amplifier (see Fig. 9a). Read the flame signal in microamperes directly from the W136A meter. Refer to Table 1 for the minimum acceptable flame currents.

The R7749B and R7849A,B amplifiers used with the Honeywell, BCS 7700 and 7800 SERIES controls, respectively, have a dc voltage flame signal output.

For the R7749B amplifier, a volt-ohmmeter with a zero to 5 or 10 Vdc scale and a minimum sensitivity of 20,000 volts/ohm is suggested.

For the R7849A,B amplifiers used with the 7800 SERIES controls, a volt-ohmmeter with a zero to 5 or 10 Vdc scale and a minimum sensitivity of one megohm/volt is recommended, (see Fig. 9c).

Make the flame signal voltage measurements as illustrated in Figs. 9b and 9c. Care is to be taken in that the positive meter lead is to be connected to the positive (+) amplifier jack and the negative meter lead connected to the negative (-) amplifier jack (BCS 7700) or the (-Com) jack in the case of a 7800 SERIES control. If the BCS 7700 and SERIES 7800 controls have the optional Keyboard Display Module, a zero to five Vdc reading will be displayed on the module.

Fig. 9a—Measuring microamp flame signal.

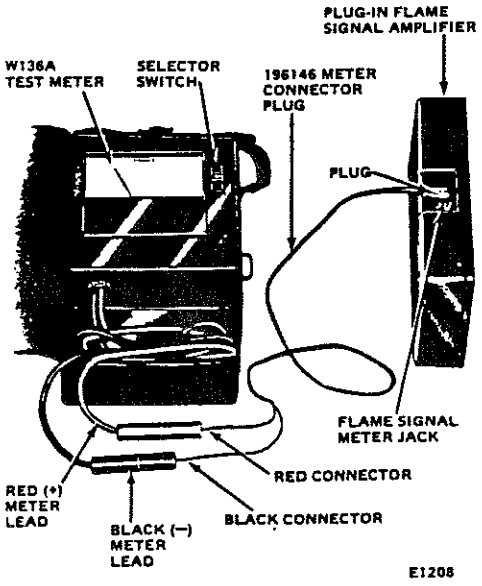

Fig. 9b—Measuring the BCS 7700 flame signal voltage.

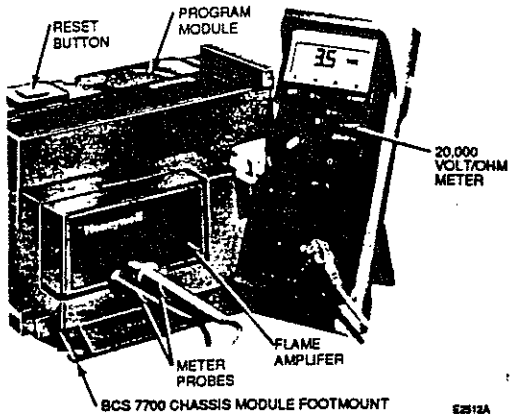

Fig. 9c—Measuring flame signal voltage of 7800 SERIES controls.

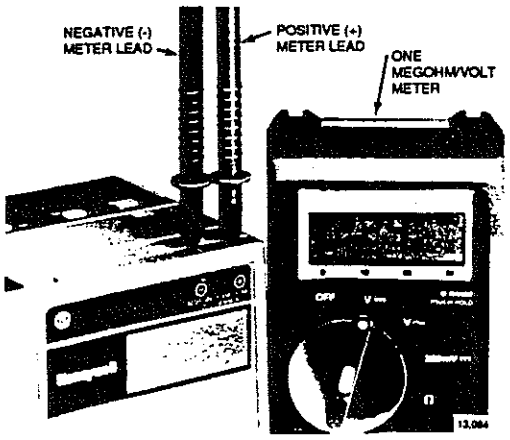

Move the flame detector and sight pipe (if not permanently attached to the burner/boiler) to view the flame from various positions. Allow a few seconds for the meter reading to stabilize. A maximum steady microamp or voltage reading is desirable. The flame signal must be above the minimum acceptable level for the flame safeguard control and associated amplifier as indicated in Table 1.

Measure the flame signal for the pilot alone, the main burner flame along, and both together (unless monitoring pilot only when using an intermittent pilot or supervising the main flame only when using direct spark ignition). Also, measure the flame signal at low and high firing rates and while modulating (if applicable).

With the flame detector in its final position, all flame signals must be steady with a current/voltage value as indicated in Table 1. If the minimum signal cannot be obtained or is unstable, refer to Troubleshooting, page 10

PILOT TURNDOWN TEST

If the detector is used to prove a pilot flame before the main fuel valve can be opened, perform a Pilot Turndown Test. Follow both the procedures in the Instructions for the appropriate flame safeguard control, and in the burner manufacturer's instructions.

TABLE 1—FLAME SIGNAL.

Flame Detector	Plug-in Amplifier	Honeywell Flame Safeguard Control	Minimum Acceptable Steady Current (microamps)	Maximum Current Expected (microamps)	Minimum Acceptable Voltage (Vdc)	Maximum Voltage (Vdc)
	R7249A	BC7000 + PM720	3.5	7.5		
	R7749B (AMPLI-CHECK™)	BCS7700A			2.2	4.98
	R7249A	R4075C,D,E	3.5	7.5		
		R4138C,D	3.5	7.5		
		R4140G,L,M	3.5	7.5		
	R7290A	R4795A,D	1.5	2.25		
	None	R7023C,	1.5	2.25		
		R7795A,C,E,G	1.5	2.25		
	R7849A or R7849B (AMPLI-CHECK™)	RM7800E,G,L,M			1.25	5.0
		RM7823A			1.25	5.0
		RM7838A,B			1.25	5.0
		RM7840E,G,L,M			1.25	5.0
		RM7885A			1.25	5.0
		RM7890A,B			1.25	5.0
		RM7895A,B,C,D			1.25	5.0
	None	RA890G	1.5	2.25		

ULTRAVIOLET RESPONSE TESTS

IGNITION SPARK RESPONSE TEST

Test to be sure that ignition spark is not actuating the flame relay (usually 2K) in the flame safeguard control.

1. Close the pilot and main burner manual fuel shutoff valves.
2. Connect the appropriate meter to the flame safeguard control amplifier. Start the burner and run through the ignition period. Ignition spark should occur, but the flame relay must not pull in. The flame signal should not be more than 0.25 microamp.
3. If the flame relay does pull in, reposition the flame detector to increase the distance between the flame detector and the ignition spark. If the flame detector is not in the line of sight of the ignition spark but appears to respond to the spark, it may be responding to reflected spark generated UV radiation. If so, relocate the flame detector so it does not receive the reflected UV radiation. It may be necessary to construct a barrier to block the UV radiation generated by the spark from the flame detector view.
4. Continue making the adjustments until the flame signal due to ignition spark is less than 0.25 microamp or 1.25 Vdc.
5. The use of the Q624A solid-state ignition transformer may also provide a method to eliminate the C7027A, C7035A, or C7044A flame detector response to UV radiation generated by ignition spark. The Q624A prevents flame detector response to ignition spark by providing alternating periods of spark generation and UV sensor activation.

RESPONSE TO OTHER ULTRAVIOLET SOURCES

Some sources of artificial light produce small amounts of ultraviolet radiation. Under certain conditions, an ultraviolet detector will respond to them as if it is sensing a flame. *DO NOT USE AN ARTIFICIAL LIGHT SOURCE TO CHECK THE RESPONSE OF AN ULTRAVIOLET DETECTOR.* To check for proper flame detector operation, test for flame failure response under all operating conditions.

WELD THE SIGHT PIPE (or Tighten the C7044A Clamp Screw)

When the flame signal is acceptable after all adjustments are made, remove the flame detector and weld the sight pipe in its final position. If you are using a swivel mount, the pipe may already be welded. Then reinstall the flame detector.

NOTE: If using a C7044A detector with no sight pipe, do not remove the detector; tighten the clamp screw securely.

FINAL CHECKOUT

Before putting the burner into service, check out the installation using the procedures in the Checkout section of the Instructions for the appropriate flame safeguard control. After completing the checkout, run the burner through at least one complete cycle to verify correct operation.

Troubleshooting

CAUTION

1. Be extremely careful while troubleshooting the detector; line voltage is present on some of the terminals when power is on.
2. Open the master switch to disconnect power before removing or installing the detector.

INADEQUATE FLAME SIGNAL

If a satisfactory flame signal cannot be obtained while adjusting the sighting position of the detector, perform the procedures indicated in steps 1 through 7. If other difficulties are encountered in the system, *refer to Troubleshooting in the Instructions for the appropriate Honeywell flame safeguard control.*

1. Check for proper line voltage. Make sure the master switch is closed, connections are correct, and power supply is the correct voltage and frequency.
2. Check the detector wiring for defects, including:
   - incorrect connections.
   - wiring type or size of wire.
   - deteriorated wire.
   - open circuits.
   - short circuits.
   - leakage paths caused by moisture, soot, or dirt.
3. With the burner running, check the temperature at the detector, when it exceeds 215° F [102° C] for a C7027 or C7044, or 250° F [121° C] for a C7035:
   - use a heat block (part no. 136733) if using a C7027A Flame Detector.
   - add the additional insulation between the wall of the combustion chamber and the detector.
   - add a shield or screen to reflect radiated heat away from the detector, or
   - add cooling (refer to SIGHT PIPE VENTILATION, page 5).
4. Remove the detector and clean the viewing window with a soft, clean cloth.
5. Clean the inside of the sight pipe (if one is used) before reinstalling the detector.
6. If the flame signal continues to be too low, replace the plug-in amplifier (if the control has one).
7. If you still cannot obtain a proper flame signal, replace flame detector (C7027A, C7044A) or UV radiation sensing tube (C7035A).

IMPORTANT: *At the completion of troubleshooting, be sure to perform the Adjustments and Checkout beginning on page 7.*

Maintenance

PERIODIC MAINTENANCE

1. Clean the viewing window and sight pipe (if used) when necessary. Remove the detector and use a soft, clean cloth to remove accumulated contaminants from the UV radiation sensor tube glass envelope.

3. Ultraviolet sensing tubes have a life expectancy of 40,000 hours of continuous use within the ambient temperature and voltage ratings. Replace the sensing tube in the C7035, or replace the C7027 or C7044 Detector, at appropriate intervals.

3. Keep the flame detection system adjusted for the smoothest, most reliable operation as recommended by the burner manufacturer.

CLEANING THE C7044A DETECTOR

When necessary, clean the C7044 flame detector by using the following procedure.

1. Loosen the two screws holding the C7044 mounting bracket to the blast tube. To remove, twist the bracket and detector. *Do not* loosen the clamp screw that holds the mounting bracket to the detector.
2. Clean the viewing window with a soft, clean cloth.
3. Insert the detector into the mounting hole, and to realign it, twist against the mounting screws.
4. Tighten the two mounting screws.

Honeywell

Helping You Control Your World

Residential and
Building Controls Division
Honeywell Inc.
1985 Douglas Drive North
Golden Valley, MN 55422

Residential and
Building Controls Division
Honeywell Limited—Honeywell Limitée
740 Ellesmere Road
Scarborough, Ontario
M1P 2V9

QUALITY IS KEY

Temperature Controller

FUJI ELECTRIC

PYZ SERIES

OPERATION MANUAL

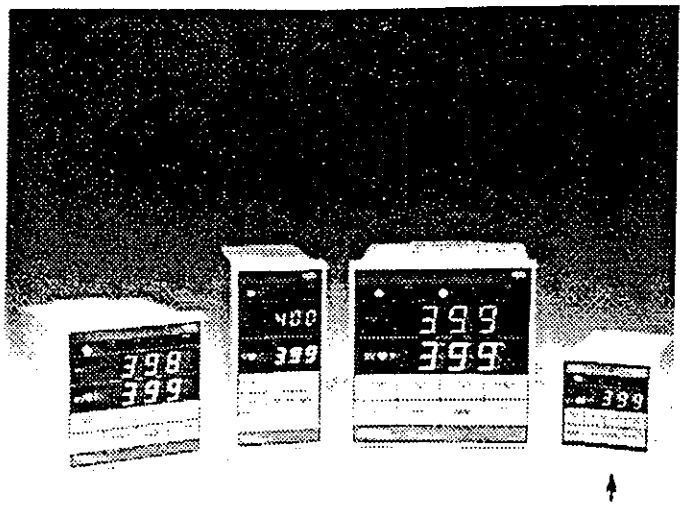

TABLE OF CONTENTS

Introduction
- Models 4
- Features 5
- Specifications 6
- Model Configurator 10

Installation
- First Things 12
- Mounting
  - PYZ4 12
  - PYZ5, PYZ7, and PYZ9 15
- Wiring
  - Wiring Diagrams 19
  - Wiring Power to Controllers 24
  - Wiring Inputs
    - Thermocouple 24
    - RTD 25
    - Current / Voltage 26
  - Wiring Output #1
    - Relay 27
    - Solid State Relay 28
    - DC Voltage Pulse 30
    - 4-20mA dc 31
  - Wiring Output #2 32
  - Wiring Alarms 32

Operation
- Front Panel Layout 34
- Front Panel Operation
  - Scrolling 37
  - Viewing Parameters 38
  - Changing Parameters 38
  - Autotuning 40
  - Changing Menus 41
- Programming
  - Primary Menu Settings
    - Setpoint Variable 42
    - Proportional Band 42
    - Integral Time 42
    - Derivative Time 43
    - Low Alarm 44
    - High Alarm 44

- Cycle Time (Output #1) 45
- Hysteresis 46
- Heater Break Alarm 47
- Setpoint Ramp Rate 48
- Autotuning 50
- Cycle Time (Output #2) 52
- Cooling Coefficient 52
- Deadband / Overlap 53
- Lock 55
- Secondary Menu Settings
  - Control Action 56
  - Sensor Break Condition 56
  - Input Type 58
  - Digital Filter 60
  - Setpoint Low Limit 61
  - Setpoint High Limit 62
  - Alarm Type 64
  - Alarm Hysteresis 67
  - Decimal Point Position 68
  - Cold Junction Compensation 70
  - Heater Voltage 71
  - Ramp-to-Setpoint 71
  - Process Variable Offset 72
  - Setpoint Variable Offset 73
  - Scale (°F / °C) 75

Error Messages 76

Maintenance
- Cleaning 77
- Refurbishing 77
- Repairing 77

Calibration 78

Appendix A (Autotuning) 79
Appendix B (Manual Tuning) 82
Appendix C (Heater Break Option) 92
Appendix D (Heat/Cool Option) 95

Quick Reference Programming 100
Your PYZ Settings 104

INTRODUCTION

Your PYZ is a high quality, fully programmable temperature/process controller incorporating many user-friendly features. The following easy-to-use instructions are intended to help you understand, set-up, effectively operate, and achieve optimal performance from your PYZ. When programmed and operated within the guidelines set forth in this manual, your PYZ controller will give you years of precise, reliable control. We thank you for the purchase of this PYZ, and if needed, offer you further technical help from our trained factory staff.

MODELS

PYZ4 1/16 DIN

Dimensions:
48(H) X 48(W) X 87(D)
millimeters
1.88(H) X 1.88(W) X 3.41(D)
inches
(measurements without socket)

Weight:
150 grams
5.3 ounces

PYZ7 72mm. square

Dimensions:
72(H) X 72(W) X 100(D)
millimeters
2.83(H) X 2.83(W) X 3.94(D)
inches

Weight:
300 grams
10.6 ounces

PYZ5 1/8 DIN

Dimensions:
96(H) X 48(W) X 100(D)
millimeters
3.78(H) X 1.88(W) X 3.94(D)
inches

Weight:
300 grams
10.6 ounces

PYZ9 1/4 DIN

Dimensions:
96(H) X 96(W) X 100(D)
millimeters
3.78(H) X 3.78(W) X 3.94(D)
inches

Weight:
400 grams
14.1 ounces

FEATURES

- PID Autotune with Manual Override
  Heating or Cooling
- Programmable Control Action
  Reverse or Direct
- Programmable Cycle Time
- 4-Digit, LED Indication
- Output Status Indication
- Fault Indication
- Programmable Decimal Point
- Digital Filtering
  (to Suppress Factory Noise)
- Setting - Touch Keys on Front Panel
- Menu Driven Format
- Programmable Input Type
- Sensor Break Protection
- Range Limiter
- Selectable °F/°C
- Offset Adjustments
- Programmable Lock-Up Feature
- Non-Volitile Memory
- Outputs: Relay, Solid State Relay
  DC Voltage Pulse, and 4-20mA dc
- 1/16, 1/8, 1/4, and 72mm Panel Mount Package
- Termination - Screw-Down Type (PYZ5, PYZ7, PYZ9)
  Socket with Screw-Down Terminals (PYZ4)
- ABS Plastic Housing
- Metal Mounting Bracket
- Optional - High/Low Alarm Outputs
- Optional - Secondary Output (Cooling)
- Optional - Ramp-to-Setpoint (Adjustable)
- Optional - Heater Break Alarm
- 85 to 265V ac Free Voltage Power Supply
- UL Recognized, CSA Approved
- 3 Year Warranty

SPECIFICATIONS

Indicating Accurcy	+/- 0.5% Full Scale + 1 digit
Setting Accuracy	+/- 0.5% Full Scale + 1 digit
Temperature Stability	5uV / °C
Repeatability	.83°C
Sampling Time	0.5 secs.
Indication:	
(PYZ4)	Process/Setting Variable: Changeable (PV/SV) Red, 4-digit, 7 segment LEDs
(PYZ5, PYZ7, PYZ9)	Process/Setting Variable: Independent (PV): Red, 4-digit, 7 segment LEDs (SV): Green, 4-digit, 7 segment LEDs
Status Indicators	Control Outputs, Alarm Outputs, Heater Break Alarm
Span of Display	DC: -1999 to 3276 max. (Programmable) Thermocouple: Temp. Range (Program.) RTD: Temperature Range (Program.) (Display Over-range: 30% of Range) (Display Under-range: 30% of Range)
Setting:	Touch Keys on Front Panel
Control Mode: (Output #1)	
Proportional Band	0 to 999.9% (Autotunable)
Integral Time	0 to 9999 secs. (Autotunable)
Derivative Time	0 to 3600 secs. (Autotunable)
Cycle Time	1 to 150 secs. (Relay, Solid State Relay, DC Voltage Pulse)
Anti-Reset	Standard (Fixed)
Hysteresis	0.0 to 20.0% (for On/Off Control)

Control Mode : (Output #2)	(Not Available on PYZ4)
Proportional Band	0.1 to 99.9 (Programmable)
Coefficient for Cooling	
Integral Time	Same as for Control Mode (Output #1)
Derivative Time	Same as for Control Mode (Output #1)
Cycle Time	1 to 150 secs. (Relay, Solid State Relay, DC Voltage Pulse)
Dead Band/Overlap	-50.0 to +50.0% (% of Heating Prop. Band)
Input:	(Programmable)
Thermocouple	J,K,R,B,S,T,E Cold junction Compensation Thermocouple Break Protection (Upscale: Downscale) Lead Wire Effect: 0.015% / ohm
RTD	(PT 100) IEC RTD Break Protection (Upscale: Downscale) Lead Wire Effect: 0.015% / ohm
Current	4-20mA dc Impedance: 250 ohm
Voltage	1-5V dc Impedance: 400K ohm

Input Range: (Thermocouple)

J	0 ..... 1000°C	32	..... 1832°F
K	0 ..... 1200°C	32	..... 2192°F
R	0 ..... 1600°C	32	..... 2912°F
B	0 ..... 1800°C	32	..... 3272°F
S	0 ..... 1600°C	32	..... 2912°F
T	-200 ..... 400°C	-328	..... 752°F
E	0 ..... 800°C	32	..... 1472°F

(RTD)	-150 ..... 400°C	-238 ..... 752°F
(4-20mA dc)	-1999 ..... 3276 Engineering Units	
(1-5V dc)	-1999 ..... 3276 Engineering Units	
Output #1: Relay	3A, 220V ac; SPDT (Resistive Load) Electrical Life: 10^5 Operations Mechanical Life: 10^7 Operations	
Solid State Relay	0.3A, 240V ac Current Leakage: 1.5mA ac max.	
DC Voltage (Pulsed)	24V dc (DC drive for SSR) ON: 24V dc typical, 60V dc max. OFF: 0.3V dc max.	
Current	4-20mA dc (Resistive Load) Impedance: 600 ohms or less Ripple Effect: 1.5% FS / 2 Hz.	
Output #2:	(Optional) Same Choices as for Output #1	
Sub-Control (Alarms) Setting Type	(Optional) Deviation, Absolute, and Combination	
Alarm Type	High Low Low with Hold on Start-up High/Low High/Low with Hold on Start-up	
Output	Relay: 1A, 220V ac; SPST (Resistive Load) (1) Contact: PYZ4 (2) Contacts: PYZ5, PYZ7, PYZ9	

Heater Break Alarm	(Optional and not available on the PYZ4 or with the Ramp-to-Setpoint Option) Input: 1 to 50A 50/60 Hz. (Current Sensing Transformer) Output: Relay: 1A, 220V ac; SPST (Resistive Load)
Memory	Non-Volitile
Diagnostics	Monitored by Watchdog Timer
Mounting	Flush, Panel Mount
Enclosure	ABS Plastic (Color: off-white)
Termination	Screw-Down Type Terminals (PYZ5, PYZ7, PYZ9) 8 or 11-Pin Socket with Screw-Down or Solder Terminals (PYZ4)
Front Panel	Lexan Drip and Dust Proof (IEC IP55 Standard)
Power Supply	85 to 265V ac
Power Consumption	10 watts
Dielectric Strength	Input: 500V ac Power Supply: 1500V ac
Insulation Resistance	50M ohm or more
Noise Rejection	Common Mode: 110 db typical Normal Mode: 50 db typical
Ambient Temperature	-10 to 50°C
Storage Temperature	-20 to 60°C
Ambient Humidity	90% RH or less

MODEL CONFIGURATOR

PYZ [ ][ ][ ][ ][1] -- [ ][V]

Panel Size

(4) 1/16 DIN [48(H) X 48(W) X 87(D)mm.]
(5) 1/8 DIN [96(H) X 48(W) X 100(D)mm.]
(7) 72mm. [72(H) X 72(W) X 100(D)mm.]
(9) 1/4 DIN [96(H) X 96(W) X 100(D)mm.]

Input Signal

(T) Thermocouple (°C) [J,K,R,B,S,T,E]
(R) Thermocouple (°F) [J,K,R,B,S,T,E]
(N) RTD (PT 100) (°C)
(S) RTD (PT 100) (°F)
(A) 1-5V dc
(B) 4-20mA dc

Control Output 1

(A) Relay (Reverse Action) [3A @ 220V ac]
(B) Relay (Direct Action) [3A @ 220V ac]
(C) Voltage Pulse (Reverse Action) [24V dc]
(D) Voltage Pulse (Direct Action) [24V dc]
(E) 4-20mA dc (Reverse Action)
(F) 4-20mA dc (Direct Action)
(G) SSR (Rev. Action) [0.3A @ 240V ac] N/A on PYZ4
(H) SSR (Direct Action) [0.3A @ 240V ac] N/A on PYZ4

Control Outpt 2 (Optional; N/A on PYZ4)

(Y) None
(A) Relay (Reverse Action) [3A @ 220V ac]
(B) Relay (Direct Action) [3A @ 220V ac]
(C) Voltage Pulse (Reverse Action) [24V dc]
(D) Voltage Pulse (Direct Action) [24V dc]
(E) 4-20mA dc (Reverse Action)
(F) 4-20mA dc (Direct Action)
(G) SSR (Reverse Action) [0.3A @ 240V ac]
(H) SSR (Direct Action) [0.3A @ 240V ac]

Options

(0) None
(1) High/Low Alarm
(2) Heater Break Alarm
(Not Avail. on PYZ4 or Ramp-to-Setpoint Models)
(3) High/Low & Heater Break Alarm
(Not Avail. on PYZ4 or Ramp-to-Setpoint Models)
(4) Ramp-to-Setpoint Feature
(Not Available on Heater Break Alarm Model)
(5) High/Low Alarm & Ramp-to-Setpoint Features
(Not Available on Heater Break Alarm Model)

Accessories

8-Pin Sockets (for PYZ4 without H/L Alarm)

Part Number	Description
ATX1NS	Solder Type Socket
ATX2PSB	Screw-Down Type Socket (terminals on back)
TP28X	Screw-Down Type Socket (terminals on front)

11-Pin Sockets (for PYZ4 with H/L alarm)

Part Number	Description
11GB	Solder Type Socket
TP311SB	Screw-Down Type Socket (terminals on back)
TP311S	Screw-Down Type Socket (terminals on front)

Heater Break Current Sensing Transformer

(Not Available on PYZ4 and Sold Separately)

Part Number	Description
CTL-6-SF	For Heater Current (1 to 30 amps)
CTL-12-S36-8F	For Heater Current (20 to 50 amps)

INSTALLATION

FIRST THINGS

Upon receiving your order of PYZ controllers, check to verify that all part numbers and quantities agree with the enclosed packing slip. Make certain that the part number on the side of the controller and on the controller's storage box both match. If any discrepencies exist, be sure to contact your supplier immediately.

Inspect all controllers for damage. Check for damaged storage boxes, scratches on the controller's enclosures and face plates, or any other irregularities that may exist due to improper handling. If such a case exists save the shipping boxes and shipping material, and contact your shipping agent immediately.

MOUNTING

PYZ4 Mounting

The PYZ4 can be either flush panel mounted or DIN rail mounted.

To flush panel mount your PYZ4(s), first verify that the depth of your cabinet will accommodate the length of the instrument(s) plus socket. Also, verify that where the controller(s) are to be mounted there is no corrosive gases (sulfric gas, ammonia, etc.) present and no vibration, impact, water, or extreme temperature exposure. Once verified, follow the diagrams below and cut appropriately sized hole(s) from the cabinet's panel; the panel should be between 1 and 3.2 millimeters thick. Insert each PYZ4 through the front of the panel. The controller's bezel should catch and not feed through the cut-out. If the fit seems too tight, insert the outer case alone, mount, then insert the rest of the controller inside the mounted case. Slide the enclosed metal, spring mounting clamp, one is shipped with every PYZ4, up the back of the controller until it makes contact with the back of the panel. With an instrument screwdriver, push the (4) mounting clamp tabs until they seat themselves in the molded tab notches located on the front end of the controller's outer case. Your controller should now be firmly set. If the controller is still loose, however, push the tabs forward a little more for added spring pressure against the panel;

do not use excessive force. Do this to each controller you want mounted. Your controllers are now ready to be wired.

To DIN rail mount your PYZ4(s), first verify that where the controller(s) are to be mounted there is no corrosive gases (sulfric gas, ammonia, etc.) present and no vibration, impact, water, or extreme temperature exposure. Once verified, mount the appropriate 8-pin or 11-pin socket(s) to your DIN rail. The 8-pin socket is for the PYZ4 without the alarm option. The 11-pin socket is for the PYZ4 with the alarm option. To complete the mounting procedure, wire each socket and plug in your controllers.

PYZ4 Dimensions

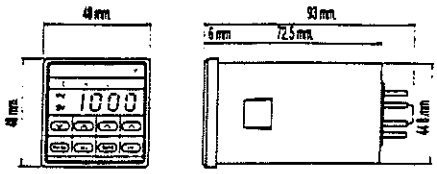

PYZ4 Bracket for Flush Panel Mounting

When Mounting Multiple Units Vertically

When Mounting Multiple Units Horizontally

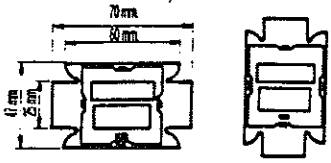

PYZ4 Cut-Out in Millimeters When Mounting One Unit

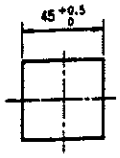

PYZ4 Cut-Out in Millimeters When Mounting Multiple Units

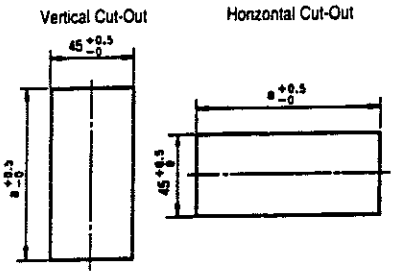

No. of units	2	3	4	5	6
a	93	141	189	237	285

PYZ4 Bracket for DIN Rail Mounting (11-Pin Example)

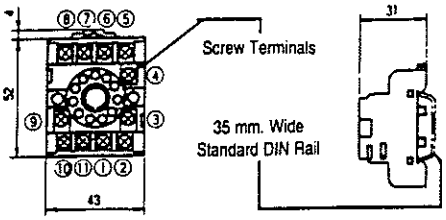

PYZ5, PYZ7, and PYZ9 Mounting

The PYZ5, PYZ7, and PYZ9 are flush panel mounted instruments.

To flush panel mount your controller(s), first verify that the depth of your cabinet will accommodate the length of your instruments(s). Also, verify that where the controller(s) are to be mounted there is no corrosive gases (sulfiric gas, ammonia, etc.) present and no vibration, impact, water, or extreme temperature exposure. Once verified, follow the diagrams below and cut appropriately sized hole(s) from the cabinet's panel; the panel should be between 1 and 8 millimeters thick. Insert each unit through the front of the panel. The controller's bezel should catch and not feed through the cut-out. If the fit seems too tight, insert the outer case alone, mount, then insert the rest of the controller inside the mounted case. Clip each of two metal, screw-type mounting brackets, two are shipped with every PYZ5, PYZ7, and PYZ9 unit, to the top and bottom of your controller. The mounting bracket's tabs fit into the two holes on both the top and bottom of the controller's outer case. With an instrument screwdriver, turn the screw in the mounting bracket until the end of it touches the back of the panel; do this to both brackets. Making sure the face of the controller is flush and straight, tighten both mounting bracket screws. Your controller should now be firmly set. If the controller is still loose, however, tighten the mounting bracket screws a little more; do not use excessive force. Do this to each controller you want mounted. Your controllers are now ready to be wired.

PYZ5 Dimensions

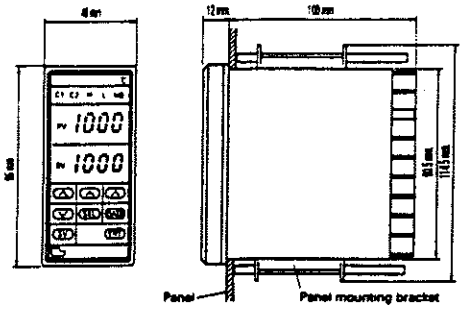

PYZ5 Cut-Out in Millimeters When Mounting One Unit

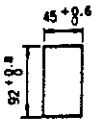

PYZ5 Cut-Out in Millimeters When Mounting Multiple Units

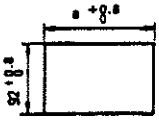

No. of unit	2	3	4	5	6
a	93	141	189	237	285

PYZ7 Dimensions

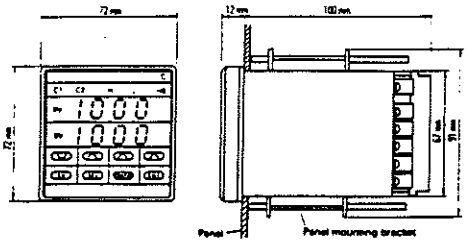

PYZ7 Cut-Out in Millimeters When Mounting One or Multiple Units

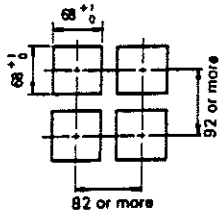

PYZ9 Dimensions

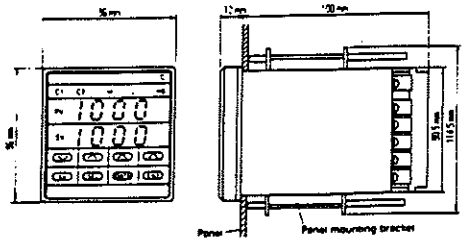

PYZ9 Cut-Out in Millimeters When Mounting One or Multiple Units

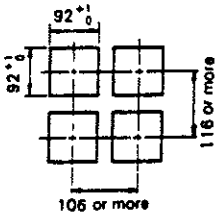

WIRING

Wiring Diagrams

PYZ4 Without Alarm (8-Pin Socket Needed)

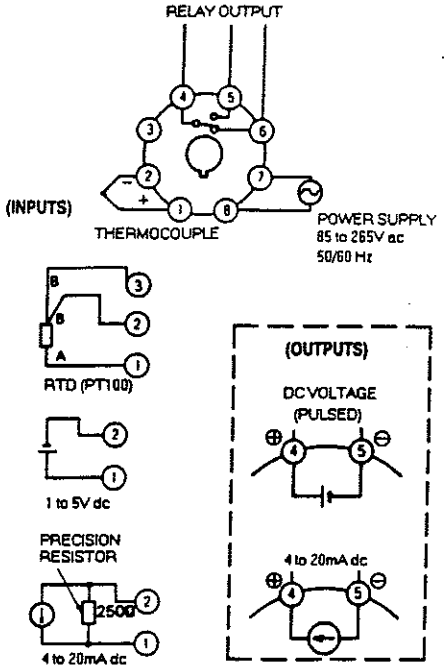

PYZ4 With Alarm (11-Pin Socket Needed)

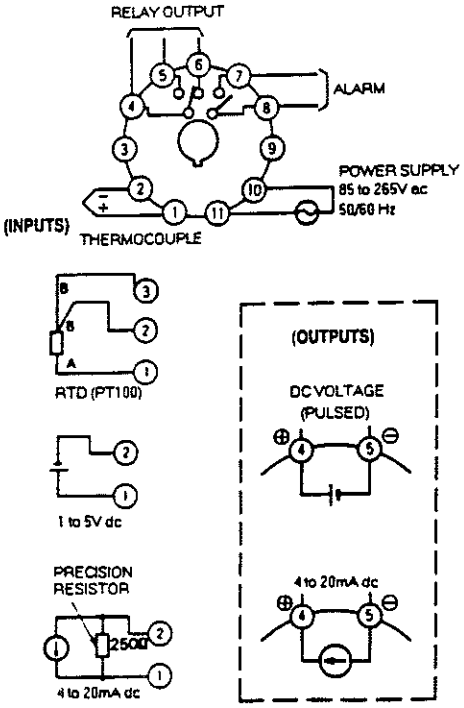

PYZ5

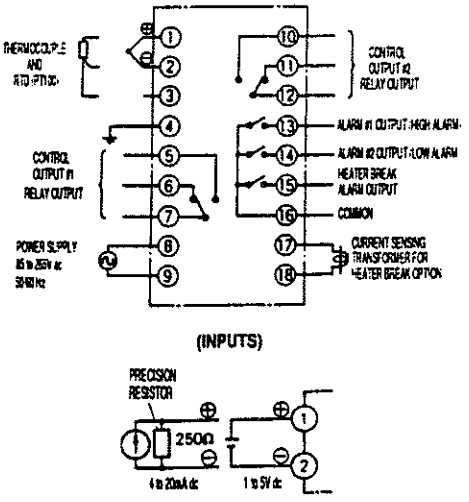

PYZ7

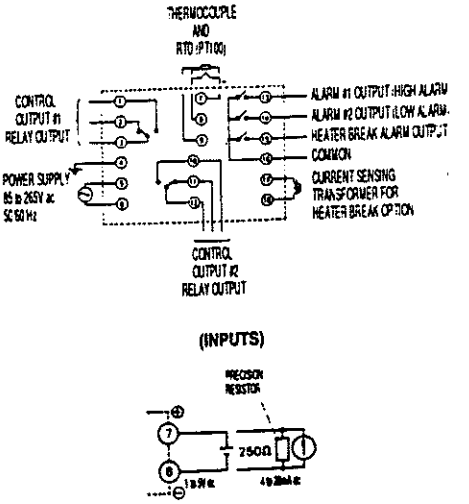

PYZ9

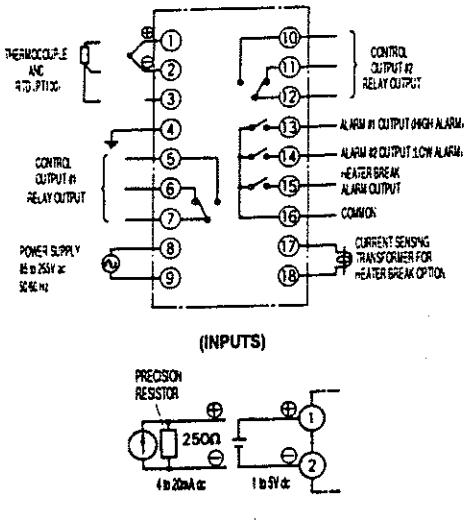

Wiring Power to Controllers

AC power is to be connected to the power supply input terminals located on the back of your PYZ5, PYZ7, or PYZ9 controller or on the socket of your PYZ4 controller; consult the appropriate wiring diagram above for the correct terminals. Your power connections should be made with 18 gauge or larger insulated wire. A 1 amp fuse should be connected in series with power and your controller to help eliminated any problems which could occur due to an over-current situation. Spade connectors may be used to facilitate the connection of the power supply wires to the power supply input terminals. The PYZ's unique power supply curcuit, incorporating a free voltage transformer, accepts line voltages between 85 and 265V ac; no need to change your wiring to accommodate voltage differences within the rated voltage range. Screw down your terminals securely. Tape or otherwise insulate your connections making sure that there is no exposed wire which could cause a dangerous short across your controller. Do not apply power to your controller until all other wiring connections have been made.

In order to minimize the risk of high frequency noise induced by coils and windings in relays, solenoids, and transformers, twist the power supply wires and keep them separated from the input and output wires also connected to your controller. A line filter or power conditioner connected to the input power will aid in protecting your controller from the effects of spikes and power transients.

Wiring Inputs

Thermocouple

When wiring your controller to operate with a thermocouple, connect your thermocouple to the thermocouple input terminals located on the back of your PYZ5, PYZ7, or PYZ9 controller or on the socket of your PYZ4 controller; consult the appropriate wiring diagram above for the correct terminals. The thermocouple must be a non-grounded type. Connect your thermocouple directly to the thermocouple input terminals whenever possible. Make sure your polarity is correct. If using lead wire between your thermocouple

and the thermocouple input terminals, make sure that the lead wire is of the same thermocouple material and grade, any dissimilar metal junctions made between the hot junction of your thermocouple and the thermocouple input terminals will lead to erroneous readings. Tape or otherwise insulate your connections making sure that there is no exposed wire which could short or be susceptible to high frequency noise both a cause for erroneous readings.

In order to minimize the risk of high frequency noise induced by coils and windings in relays, solenoids, and transformers, connect thermocouples which have a braided sheath and ground one end of the sheath. The sheath will absorb the high frequency noise and send it to ground allowing the millivolt signal carried through your thermocouple to arrive at your controller unaffected. Keep your thermocouple wires separate from the power and output wires also connected to your controller. If you plan on carrying your thermocouple signal a long distance, a signal transmitter might be needed to maintain an accurate reading; in this case, a PYZ controller accepting a current/voltage input would be necessary.

RTD (PT100)

When wiring your controller to operate with a 2-Wire or 3-Wire 100ohm Platinum RTD, connect your RTD (PT100) to the RTD (PT100) input terminals located on the back of your PYZ5, PYZ7, or PYZ9 controller or on the socket of your PYZ4 controller; consult the appropriate wiring diagram above for the correct terminals. Whenever possible, use a 3-Wire RTD (PT100). All 3 wires must have the same resistance and each be less then 10 ohms. If using a 2-Wire RTD (PT100), jumper the two B legs with a wire of equal resistance. Make sure your polarity is correct. Tape or otherwise insulate your connections making sure that there is no exposed wire which could short or be susceptible to high frequency noise both a cause for erroneous readings.

In order to minimize the risk of high frequency noise induced by coils and windings in relays, solenoids, and transformers, connect RTDs which have a braided sheath and ground one end of the sheath. The sheath will absorb the high freqency noise and send it to ground allowing the signal carried though your RTD (PT100) to arrive at your controller unaffected. Keep your RTD

(PT100) wires seperate from the power and output wires also connected to your controller. If you plan on carrying your RTD (PT100) signal a long distance, a signal transmitter might be needed to maintain an accurate reading; in this case, a PYZ controller accepting a current/voltage input would be necessary.

Current/Voltage

When wiring your controller to operate with a current/voltage signal, connect your current/voltage signal wires to the current/voltage input terminals located on the back of your PYZ5, PYZ7, or PYZ9 controller or on the socket of your PYZ4 controller: consult the appropriate wiring diagram above for the correct terminals. The PYZ controller accepts both 1-5V dc and 4-20mA dc signals. If wiring for a 1-5V dc input signal, wire normally as stated above. If wiring for 4-20mA dc input signal, wire as stated above but also connect the 250 ohm precision resistor, one is shipped with every PYZ controller with current/voltage input, across the input terminals. This is needed if the PYZ controller is to read a 4-20mA dc signal. Make sure your polarity is correct. Tape or otherwise insulate your connections making sure that there is no exposed wire which could short or be susceptible to high frequency noise both a cause for erroneous readings.

In order to minimize the risk of high frequency noise induced by coils and windings in relays, solenoids, and transformers, connect current/voltage input wires which have a braided sheath and ground one end of the sheath. The sheath will absorb the high frequency noise and send it to ground allowing your electrical signal carried through your current/voltage wires to arrive at your controller uneffected. Keep your wires separate from the power and output wires also connected to your controller. If you plan on carrying your current/voltage signal a long distance, one or more signal repeaters might be needed to maintain an accurate reading.

Wiring Output #1
RELAY

To wire a PYZ controller with relay output, connect the wires of your load to the relay output terminals located on the back of your PYZ5, PYZ7, or PYZ9 controller or on the socket of your PYZ4 controller: consult the appropriate wiring diagram above for the correct terminals. The single-pole, double-throw (SPDT) relay output on the PYZ controller can handle up to 3 amps @ 220V ac, resistive load. The electrical life of the relay is 10^5 operations; the mechanical life is 10^7 operations. If a higher current rating is required, the PYZ relay can activate an external relay with a higher current rating. This external relay would then be used as your load handling device. Using an external relay is also a means of protecting your controller; if something were to happen with your load, the less expensive relay would fail and not your controller. Your output connections should be made with 18 gauge or larger insulated wire. Spade connectors may be used to facilitate the connection of the wires to your load and to the relay output terminals. Your output connections should be made using the normally open side of the relay. Reverse and direct control action can be programmed in the controller and does not require a change in the output wiring. When wired on the normally open side of the relay, if power is cut to the controller, the output circuit would open de-energizing the load; this would protect your load from running out of control. Tape or otherwise insulate your connections making sure that there is no exposed wire which could cause a dangerous short across your controller. It takes around 5 secs. for the relay to activate after start-up

If using your PYZ as a proportional controller, make sure that the cycle time programmed in your controller is not shorter than 10 secs. A short cycle time will increase your control accuracy but shorten the life of your relay. If using your PYZ as an On/Off controller, make sure that the hysteresis setting programmed in your controller is larger than 0%. The hysteresis will prevent the relay from chattering at setpoint.

To power your load from the controller:

1: Jumper between the hot power supply terminal and the common relay terminal
2: Wire between the normally opened relay terminal and your load
3: Wire between the common power supply terminal and your load

The relay now switches the power to your load. The power circuit to your load is the same as the power circuit to your controller.

To power your load from another power source:

1: Wire between the hot leg of your external power supply and the common relay terminal
2: Wire between the normally opened relay terminal and your load
3: Wire between the common leg of your external power supply and your load

The relay now switches the power to your load. The power circuit to your load is separate from the power circuit to your controller.

In order to minimize the risk of electrical noise induced by coils and windings in relays, solenoids, and transformers, twist the load wires and keep them separated from the power and input wires also connected to your controller. A snubber connected across the relay output terminals will also aid in protecting your controller from the effects of electrical noise.

Solid State Relay

To wire a PYZ controller with a solid state relay output, connect the wires of your load or triac to the solid state relay output terminals located on the back of your PYZ5, PYZ7, or PYZ9 controller or: consult the appropriate wiring diagram above for the correct terminals. You would use the same terminals as for a relay; use the normally open side of the relay. The solid state relay output on the PYZ controller can handle 0.3 amps @ 240V ac, resistive load. If a higher current rating is required, the PYZ solid state relay can activate a AC driven triac with a higher current rating. This external triac would then be used as your load handling device.

Using an external triac is also a means of protecting your controller; if something were to happen with your load, the less expensive triac would fail and not your controller. Your output connections should be made with 18 gauge or larger insulated wire. Spade connectors may be used to facilitate the connection of wires to your load and to the solid state relay output terminals. Reverse and direct control action can be programmed in the controller and does not require a change in the output wiring. If power is cut to the controller the output circuit would open de-energizing the load; this would protect your load from running out of control. Tape or otherwise insulate your connections making sure that there is no exposed wire which could cause a dangerous short across your controller. It takes around 5 secs. for the solid state relay to activate after start-up.

If using your PYZ as a proportional controller, the cycle time can be programmed to as low as 1 sec. A short cycle time will increase your control accuracy but may shorten the life of your load. If using your PYZ as an On/Off controller, make sure that the hysteresis setting programmed in your controller is larger then 0%.

To power your load from the controller:

1: Jumper between the hot power supply terminal and one solid state relay terminal
2: Wire between the other solid state relay terminal and your load
3: Wire between the common power supply terminal and your load

The solid state relay now switches the power to your load. The power circuit to your load is the same as the power circuit to your controller.

To power your load from another power source:

1: Wire between the hot leg of your external power supply and one solid state relay terminal
2: Wire between the other solid state relay terminal and your load
3: Wire between the common leg of your external power supply and your load

The solid state relay now switches the power to your load. The power circuit to your load is separate from the power circuit to your controller.

In order to minimize the risk of electrical noise induced by coils and windings in relays, solenoids, and transformers, twist the load wires and keep them separated from the power and input wires also connected to your controller. A snubber connected across the solid state relay output terminals will also aid in protecting your controller from the effects of electrical noise.

DC Voltage (Pulsed)

To wire a PYZ controller with a DC voltage (pulsed) output, connect the wires of your solid state relay to the DC voltage (pulsed) output terminals located on the back of your PYZ5, PYZ7, or PYZ9 controller or on the socket of your PYZ4 controller; consult the appropriate wiring diagram above for the correct terminals. Make sure that your polarity is correct. The non-isolated DC voltage (pulsed) signal is a 24V dc output when on and 0.3V dc max. output when off. The output signal from the PYZ is used to trigger a DC input solid state relay with a current rating appropriate for the application. This external solid state relay would be used as your load handling device. Using an external solid state relay protects your controller; if something were to happen with your load, the less expensive solid state relay would fail and not your controller. Your output connections should be made with 18 gauge or larger insulated wire. Spade connectors may be used to facilitate the connection of wires to your solid state relay and to the DC voltage (pulsed) output terminals. Reverse and direct control action can be programmed in the controller and does not require a change in the output wiring. If power is cut to the controller the output circuit would open de-energizing the load; this would protect your load from running out of control. Tape or otherwise insulate your connections making sure that there is no exposed wire which could cause a dangerous short across your controller. It takes around 5 secs. for the DC voltage (pulsed) to activate after start-up.

If using your PYZ as a proportional controller, the cycle time can be programmed to as low as 1 sec. A short cycle time will increase your control accuracy. If using your PYZ as an On/Off controller, the hysteresis setting may be programmed between 0 and 100% full scale, always being programmed more than 0% full scale.

To power your load from the controller:

1: Wire between the negative DC voltage (pulsed) output terminal and the negative terminal on the input side of your solid state relay
2: Wire between the positive DC voltage (pulsed) output terminal and the positive terminal on the input side of your solid state relay
3: Wire the output side of your solid state relay in series with the hot power supply lead going to your load (make sure that your solid state relay has a correctly sized heat sink to dissipate heat)

The solid state relay now switches the power to your load.

In order to minimize the risk of electrical noise induced by coils and windings in relays, solenoids, and transformers, twist the DC voltage (pulsed) wires and keep them separated from the power and input wires also connected to your controller. A snubber connected across the DC voltage (pulsed) output terminals will also aid in protecting your controller from the effects of electrical noise.

4 to 20mA dc

To wire a PYZ controller with a 4 to 20mA dc output, connect the wires of your load to the 4 to 20mA dc output terminals located on the back of your PYZ5, PYZ7, or PYZ9 controller or on the socket of your PYZ4 controller; consult the appropriate wiring diagram above for the correct terminals. Make sure that your polarity is correct. The output is actually a 0 to 23mA dc non-linear and non-isolated analog signal. The output signal from the PYZ is used to trigger a variety of output devices such as SCRs and valve actuators. Your load must be less than 600 ohms. Your output connections should be made with 18 gauge or larger insulated wire. Spade connectors may be used to facilitate the connection of wires to your output device and to the 4 to 20mA dc output terminals. Reverse and direct control action can be programmed in the controller and does not require a change in the output wiring. If power is cut to the controller the output would go to 0mA dc de-energizing the load; this would protect your load from running out

of control. Tape or otherwise insulate your connections making sure that there is no exposed wire which could cause a dangerous short across your controller. It takes around 5 secs. for the 4 to 20mA dc signal to activate after start-up.

When using your PYZ with 4 to 20mA dc output as a proportional controller, the cycle time is not indicated on the primary menu or it is set to zero. The output is true proportional, as opposed to time proportional, updating at the controller's sampling rate of 500msecs.

To power your load from the controller:

1: Wire between the negative 4 to 20mA dc output terminal and the negative terminal on the input side of your output device
2: Wire between the positive 4 to 20mA dc output terminal and the positive terminal on the input side of your output device

The 4 to 20mA dc analog signal now controls your output device.

In order to minimize the risk of electrical noise induced by coils and windings in relays, solenoids, and transformers, twist the 4 to 20mA dc wires and keep them separated from the power and input wires also connected to your controller.

Wiring Output #2

Wiring Output #2 is accomplished the same as with output #1. Refer to the output #1 section to find the type of output you will be using in output #2 and follow the same directions.

Wiring Alarms

To wire a PYZ controller with an alarm output, connect the wires of your alarm to the alarm output terminals located on the back of your PYZ5, PYZ7, or PYZ9 controller or on the socket of your PYZ4 controller; consult the appropriate wiring diagram above for the correct terminals. The PYZ5, PYZ7, and PYZ9 have 2

individual normally open, single pole, single throw (SPST) relays each rated at 1 amp @ 220V ac, the PYZ4 has one. Your output connections should be made with 18 gauge or larger insulated wire. Spade connectors may be used to facilitate the connection of wires to your alarm and to the alarm output terminals. Alarm type can be programmed in the controller and does not require a change in the output wiring. Tape or otherwise insulate your connections making sure that there is no exposed wire which could cause a dangerous short across your controller. It takes around 5 secs. for the alarm relay to activate after start-up.

Your PYZ alarm is On/Off and the hysterisis setting should be programmed larger then 0% full scale to prevent relay chatter.

To power your alarm from the controller:

1: Jumper between the hot power supply terminal and the common alarm relay terminal
2: Wire between the normally opened alarm relay terminal and your alarm
3: Wire between the common power supply terminal and your alarm

The alarm relay now switches the power to your alarm. The power circuit to your alarm is the same as the power circuit to your controller.

To power your alarm from another power source:

1: Wire between the hot leg of your external power supply and the common alarm relay terminal
2: Wire between the normally opened alarm relay terminal and your alarm
3: Wire between the common leg of your external power supply and your alarm

The alarm relay now switches the power to your alarm. The power circuit to your alarm is separate from the power circuit to your controller.

In order to minimize the risk of electrical noise induced by coils and windings in relays, solenoids, and transformers, twist the alarm wires and keep them separated from the power, input, and main output wires also connected to your controller. A snubber connected across the alarm output terminals will also aid in protecting your controller from the effects of electrical noise.

OPERATION

FRONT PANEL LAYOUT

PYZ4

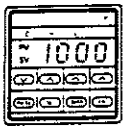

PYZ7

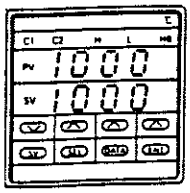

PYZ5

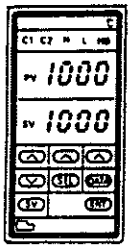

PYZ9

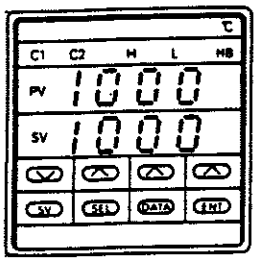

PV Display:	Process Variable display (red, 4-digit, 7-segment LEDs) (a PV status LED indicates when the PYZ4 is displaying the process variable on the PYZ4's PV/SV display)
SV Display:	Setpoint Variable display (green, 4-digit, 7-segment LEDs) (a SV status LED indicates when the PYZ4 is displaying the setpoint variable on the PYZ4's PV/SV display)
C indicator:	Control Output indicator on the PYZ4 controller (output is energized when the indicator is lit, de-energized when the indicator is not lit)
C1 Indicator:	Control Output #1 indicator on the PYZ5, PYZ7, and PYZ9 controllers (output is energized when the indicator is lit, de-energized when the indicator is not lit)
C2 Indicator:	Control Output #2 indicator on the PYZ5, PYZ7, and PYZ9 controllers (output is energized when the indicator is lit, de-energized when the indicator is not lit)
H indicator:	High Alarm indicator (High Alarm output is energized when the indicator is lit, de-energized when the indicator is not lit)
L Indicator:	Low Alarm indicator (Low Alarm output is energized when the indicator is lit, de-energized when the indicator is not lit)
HB Indicator:	Heater Break Alarm indicator (Heater Break Alarm output is energized when the indicator is lit, de-energized when the indicator is not lit)

▽	**key:**	Decrement key (data value decreases one unit every time the key is pressed)
△	**key:**	1-digit key (data value increases one 1-digit value every time the key is pressed: initialize a 1-digit change by pressing this increment key once, ready to change once the value starts flashing)
△	**key:**	10-digit key (data value increases one 10-digit value every time the key is pressed: initialize a 10-digit change by pressing this increment key once, ready to change once the value starts flashing)
△	**key:**	100-digit key (data value increases one 100-digit value every time the key is pressed: initialize a 100-digit change by pressing this increment key once, ready to change once the value starts flashing)
PV/SV	**key:**	Process Variable, Setpoint Variable switchover key on the PYZ4 (the displayed value on a PYZ4 with one 4-digit display can be switched between process variable and setpoint variable using this key: resets the menu)
SV	**key:**	Setpoint Variable display key on the PYZ5, PYZ7, and PYZ9 controllers (the setpoint variable is displayed on the lower 4-digit display when pressed: resets the menu)
SEL	**key:**	Select key (used to select parameters in the controller's menus, each time the key is pressed the next parameter is selected)
DATA	**key:**	Data key (the data key displays the value programmed for each parameter selected)
ENT	**key:**	Enter key (the enter key is used to save parameter data in the controller's non-volitile memory, EEPROM)

FRONT PANEL OPERATION

Scrolling

Scrolling down the primary and secondary menus of your PYZ controller is very easy to do. By pressing the SEL key located on the front panel, the controller's parameters are brought up, one at a time, on the SV or PV/SV display; each SEL key stroke scrolls down each menu one parameter. See the meaning of each parameter in the programming section of this manual. Depending on the particular PYZ you have, all parameters listed in this manual may not necessarily be displayed in your menus.

Scrolling on the PYZ is one way only. If you need to review a parameter already passed, you must either continue pressing the SEL key until the desired parameter comes back around or press the SV key on the PYZ5, PYZ7, and PYZ9 controllers or the PV/SV key on the PYZ4 controller and to then scroll down to the desired parameter. A SV and PV/SV key stroke displays your control setpoint and resets the menu. Once having scrolled to the parameter(s) you want, setpoints and system settings may be reviewed and, or changed. See the illustration below.

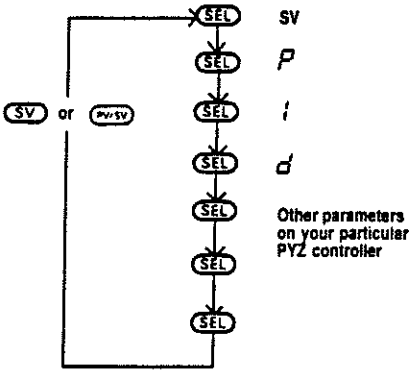

Viewing Parameters

Once you have selected a parameter, you can review the data for that parameter simply by pressing the DATA key. Once pressed, the value for the selected parameter is brought up on the SV or PV/SV display ready to be changed if need be. See the illustration below.

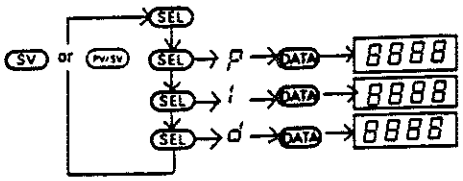

Changing Parameters

Once the data of your selected parameter is brought up on the SV or PV/SV display, by pressing the DATA key, and the lock feature is disabled, changes can be made to the indicated value. There are three increment keys and one decrement key on the PYZ controller which are used to make such changes. The three increment keys (1-digit, 10-digit, 100-digit) are first used to initiate the value changing process. The increment keys and decrement key are then used to make the actual changes. When the desired value is displayed, the ENT key is then pressed to save the entry and to proceed to the next parameter.

If your 1-digit value needed to be changed, then the 1-digit increment key would need to be pressed once to initiate the change. Once pressed, the 1-digit value would start flashing indicating that change is acceptable. If the value did not flash, then the lock feature in your controller is enabled; the lock feature would need to be disabled in order to continue with the change. The 1-digit increment key together with the decrement key would then be used to change the value up and down. Once the desired

value for the 1-digit LED display was correct, you would then proceed to the 10-digit and then the 100-digit LED displays and go through the same process. After all the digits were entered correctly, the ENT key would then be pressed to save the new value. See the illustrative example below.

EXAMPLE: Change a parameter's value from 750 to 1275

1: Press the 1-digit increment key to initiate change (note the digit flashing, if not then the value is locked)

Use the 1-digit increment key and decrement key to scroll the (0) to a (5)

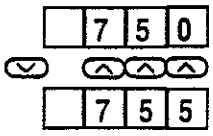

2: Press the 10-digit increment key to initiate change (note the digit flashing, if not then the value is locked)

Use the 10-digit increment key and decrement key to scroll the (5) to a (7)

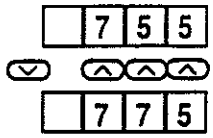

3: Press the 100-digit increment key to initiate change (note the digit flashing, if not then the value is locked)

Use the 100-digit increment key and decrement key to scroll the (7) to a (12)

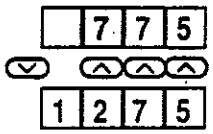

4: Press the ENT key to save the new 1275 value or the value will default back to 750.

Autotuning

Autotuning is a quick and effective way of tuning the PYZ's PID parameters to your particular application. The autotuning function works well on most applications, but not all. If your process is very dynamic, can't tolerate overshoot, or if forces external to your system effect your process, the autotuning function will either establish poor PID parameters or never complete the autotuning procedure. If you can not autotune your PYZ controller, go to Appendix B of this manual for information on how to manually tune your control parameters. For a more indepth understanding of the autotuning procedure, refer to Appendix A.

Before initiating the autotune function, first decide if you would like to autotune at setpoint or 10% below setpoint. By deciding to autotune your application 10% below setpoint, the PID parameters may not be as refined as if autotuned at setpoint but the process overshoot encountered during the procedure would not be as great. Once you have decided on which type of autotuning to perform, bring your process near setpoint before starting the autotune procedure. Once your process variable and setpoint variable are relatively close, scroll down the primary menu using the SEL key until you come to the autotuning parameter. At the autotuning parameter, press the DATA key to display a "0". At that point, press the 1-digit increment key to initiate a value change. If you enter a "1", the process will autotune at setpoint. If you enter a "2", the process will autotune at 10% below setpoint. After changing the value, press the ENT key. Once the ENT key is pressed, the controller will start autotuning. A flashing decimal point on the lower right corner of the SV or PV/SV display indicates autotuning is in progress. Duration of the autotuning process varies with every application. The autotuning process will, however, generally take between 1 and 30 minutes to complete. Once the decimal point stops flashing, the controller is finished autotuning. The Data value for the autotune parameter is reset back to "0". The PID parameters choosen by the autotuning process will be automatically saved in non-volitile memory, EEPROM. The controller will now operate with the new PID parameters. Even after a power down and restart, the new PID parameters will be effective until the parameters are manually changed or another autotuning is initiated. If, during autotuning, power is lost, the PYZ controller defaults to the initial PID parameters and the data value

for the autotuning function is reset back to "0". Setting the autotune function back to "0" is also a means of aborting the autotune procedure. See the illustrated example below.

EXAMPLE: Autotuning a PYZ controller

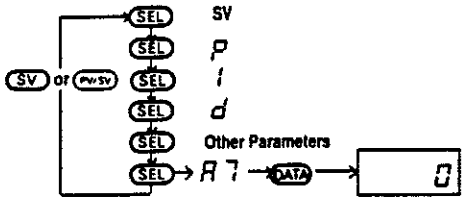

1: Press the 1-digit increment key to initiate change (note the digit flashing; if not, the value is locked)

Use the 1-digit increment key and decrement key to scroll the (0) to a (1) or (2)

Note: (1) autotunes at setpoint
(2) autotunes 10% below setpoint

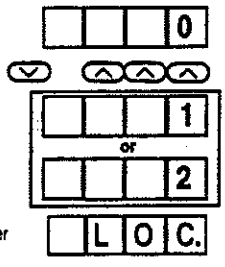

2: Press the ENT key to start the autotuning function (note the decimal point in the lower right of the SV or PV/SV display)

Changing Menus

The PYZ controller has two programmable menus in which to access, the primary (setpoint) menu and the secondary (system) menu. All that needs to be done to change menus is press and hold the SEL key for 10 secs. If you are in the primary menu and hold the SEL key, you will toggle over to the secondary menu; the reverse is also true. Powered up, the PYZ is in the primary menu.

PROGRAMMING

PRIMARY MENU SETTINGS

Parameter	Meaning	Description
SV	Main Setpoint Variable	The main setpoint variable is the control point you wish to maintain The main setpoint variable is settable within the input range or between the (P-SL) and the (P-SU) settings
P	Proportional Band	The Proportional Band is that area around main setpoint where the control output is neither full on nor full off but rather a percentage of. Setting range: 0.0 to 999.9% of full scale For On/Off control set to "0"
I	Integral Time (Reset)	The Integral Time is the speed at which a corrective increase or decrease in output is made to compensate for offset which usually accompanies proportional only processes. The more Integral Time entered the slower the action. The less Integral Time entered the faster the action. Enter as much Integral Time as necessary to eliminate offset without over-compensating resulting in process oscillation. Setting Range: 0 to 9999 secs. Integral Action is turned off when set to "0"

d	Derivative Time (Rate)	The Derivative Time is that time used in calculating rate of change and thermal lag in helping eliminate overshoot which results in response to process upsets. This overshoot usually accompanies proportional only and proportional-integral processes. The derivative action dampens proportional and integral action as it anticipates where the process should be. The more Derivative Time entered the more damping action. The less Derivative Time entered the less damping action. Enter as much Derivative Time as necessary to eliminate overshoot without over-damping the process resulting in process oscillation. Setting Range: 0 to 3600 secs. Derivative Action is disabled when set to "0"

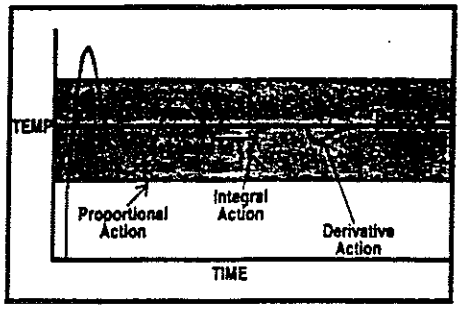

AL	Low Alarm Setpoint	The Low Alarm Setpoint is that point where if the process falls below, the low alarm output relay is energized. If the alarm type, programmed in the secondary menu, includes an absolute value for the Low Alarm Setpoint, enter the actual value you want the alarm to be activated at regardless of what the main setpoint is set for. If the alarm type includes a deviation value for the Low Alarm Setpoint, enter the number of units below main setpoint in which you want the alarm to be activated at; the deviation alarm tracks main setpoint. Settable within the Input Range Not indicated without the Alarm Output Option
AH	High Alarm Setpoint	The High Alarm Setpoint is that point where if the process rises above, the high alarm output relay is energized. If the alarm type, programmed in the secondary menu, includes an absolute value for the High Alarm Setpoint, enter the actual value you want the alarm to be activated at regardless of what the main setpoint is set for. If the alarm type includes a deviation value for the High Alarm Setpoint, enter the number of units above main setpoint in which you want the alarm to be activated at; the deviation alarm tracks main setpoint. Settable within the Input Range Not indicated without the Alarm Output Option

TC	Cycle Time (Output #1)	The Cycle Time for output #1 is that time where the output is on for a percentage of that time and off for a percentage of that time creating a proportioning effect. The Cycle Time is only used when the PYZ is used as a P,PI, PD, or PID controller and when the output is time proportional as with the relay, SSR, and DC voltage (pulsed), outputs. Shorter the Cycle Time, higher the proportioning resolution is and better the control becomes but with increase strain on the output device. Enter a value that is based on the limitations of your controller's output type. Setting Range: 0 to 150 secs. Not indicated with current output For On/Off control set to "0" "0" = 0.5 secs.

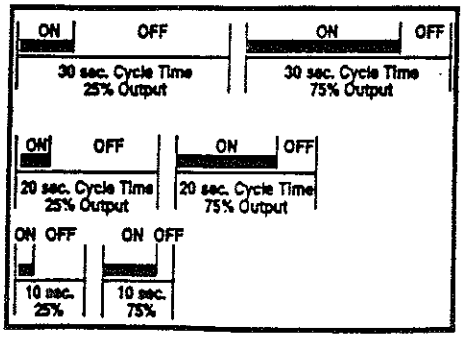

HYS	**Hysteresis (Output #1)**	The Hysteresis for output #1 is that area around the main setpoint where the output does not change condition. That area or deadband is intended to eliminate relay chatter at setpoint for On/Off control applications. The wider the Hysteresis, the longer time the controller takes to change output condition. The narrower the Hysteresis, the shorter time the controller takes to change output condition. When the Hysteresis is narrow, the On/Off control is more accurate but the wear on the output relay is increased. Enter a value which is small enough to meet the control tolerance of the application but large enough to eliminate relay chatter. Setting Range: 0.0 to 20.0% of full scale

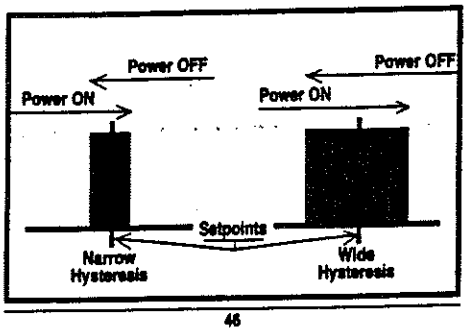

Hb	**Heater Break Alarm**	The Heater Break Alarm setpoint is that point where if the heater's operating current falls below, the heater break alarm output relay is energized. This option is used in cases where the PYZ is controlling a bank of heaters wired in parallel. A current transformer around the hot lead wire going to the heater bank and connected to the controller is timed with the controller's output and senses the current used by the heater bank. If one or more of the zones burnout, resulting in cold spots, the current used by the defected heater bank is reduced. By determining what the optimal current and the optimal current minus one zone for the heater bank is, the Heater Break Alarm setpoint can be calculated and entered to inform the operator of heater problems. Setting Range: 0 to 50.0 amps Not indicated without the Heater Break Alarm output option Not available with the Ramp-to-Setpoint option Alarm is turned off when set to "0"

$$\frac{\text{Optimal Current of Heater Bank minus Optimal Current of Heater Bank less One Zone}}{2} + \text{Optimal Current of Heater Bank less One Zone} = \text{Heater Break Alarm Setpoint}$$

Hb

Srr	**Setpoint Ramp Rate**	The Setpoint Ramp Rate is the speed at which a process approaches main setpoint on start-up or after a main setpoint change. The Setpoint Ramp Rate ramps a process, up or down, at a constant rate helping eliminate thermal lag thus eliminating initial overshoot problems. The function is most usefull on fast reacting systems. Using the PID control parameters, the PYZ controls the process at incremental setpoints for one minute each leading to main setpoint. Once main setpoint is reached, the ramping function ends. Entering a small Setpoint Ramp Rate value significantly reduces the initial overshoot but requires a lot of time to reach main setpoint. Enterng a large Setpoint Ramp Rate value somewhat reduces the initial overshoot but requires much less time to reach main setpoint. Enter a value which is small enough to eliminate the initial overshoot but large enough to reach main setpoint as quickly as possible. Setting Range: 1 to 999 or 0.1 to 99.9 Units/Minute Not indicated without the Ramp-to-Setpoint option Not available with the Heater Break Alarm option Function is off when set to "0"

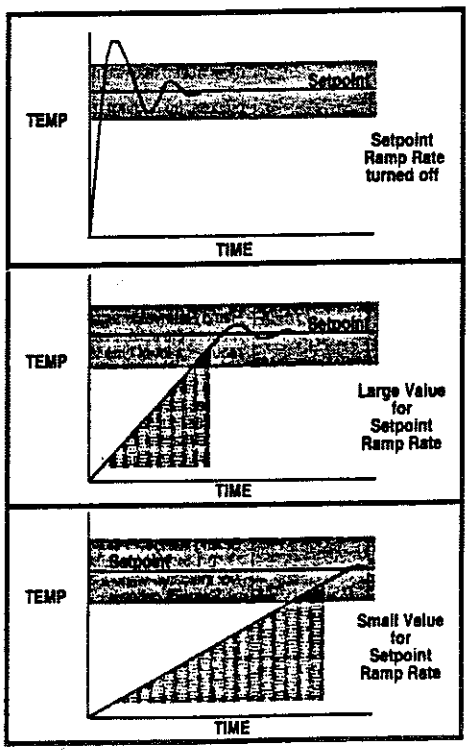

A7	**Autotuning**	Autotuning is the automatic calculation and entering of the control parameters (Proportional Band, Integral Time, and Derivative Time) into EEPROM memory. The PYZ will autotune both reverse and direct acting control applications. The Autotuning function is a simple way of tuning your PYZ to a particular process. There are two types of Autotuning that can be performed by the controller, Autotuning at main setpoint or Autotuning at 10% of full scale below main setpoint. Autotuning at 10% of full scale below main setpoint may yield slightly different values, not as precise, but the process overshoot encountered during the Autotuning procedure would not be as great. Enter the value for the type of autotuning you would like to run on your particular application based on overshoot tolerances and the precision of the PID parameters needed. For more detailed information on how to Autotune, refer to the Operation section of this manual. For more information on the principles of Autotuning, refer to Appendix A. 0 - Autotuning off 1 - Autotuning performed at setpoint 2 - Autotuning performed at 10% of full scale below setpoint

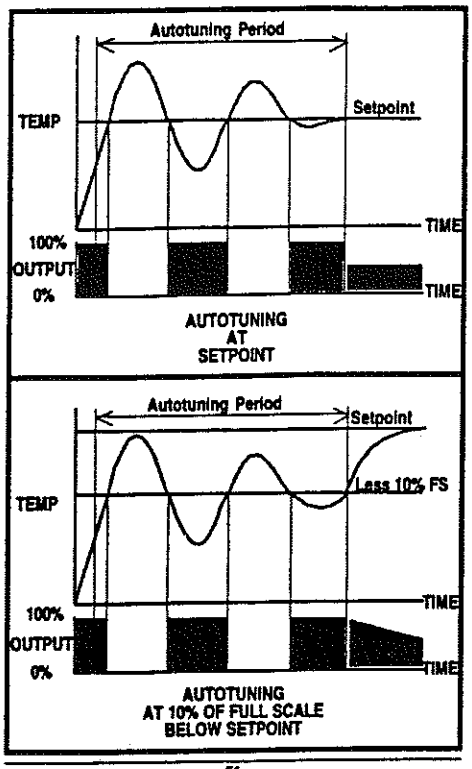

tC2	**Cycle Time (Output #2)**	The Cycle Time for output #2 is that time where the output is on for a percentage of that time and off for a percentage of that time creating a proportioning effect. Output #2 is the cooling side of a heat/cool PYZ controller. Shorter the Cycle Time, higher the proportioning resolution is and better the control becomes but with increase strain on the output device. Enter a value that is based on the limitations of your controller's output type. Setting Range: 0 to 150 secs. Not indicated without the control output #2 option Not indicated with current output "0" = 0.5 secs.
CooL	**Proportional Band Coefficient for Cooling**	The Proportional Band Coefficient for Cooling is a multiplier for the proportional band of the cooling side of a heat/cool PYZ controller. The Proportional Band Coefficient for Cooling varies the width of the proportional band on the cooling side. A large value would establish a larger proportional band for more powerful cooling loads. A small value would establish a smaller proportional band for less powerful cooling loads. Enter a value based on the power of your cooling load. Setting Range: 0.1 to 100.0 Not indicated without control output #2 option For On/Off control set to "0"

db	**Dead Band/ Overlap**	The Deadband/Overlap is that percentage of the heating side of the proportional band where the heating (output #1) and the cooling (output #2) outputs are separated by a Deadband or where they Overlap on a heat/cool PYZ controller. A value greater than zero establishes a Dead band or area where neither the heating nor cooling outputs are energized for more powerful heating and cooling loads. A value less than zero establishes an Overlap or area where both the heating and cooling outputs are energized at the same time for less powerful heating and cooling loads. Enter a value based on the power of your heating and cooling loads as well as the application's effeciency in maintaining tight heat/cool control. Setting Range: -50.0 to 50.0% of the heating proportional band Not indicated without control output #2 option

Proportional Band for Heating = $\frac{P}{2}$

Proportional Band for Cooling = $\frac{P}{2} \times$ CooL

Dead Band / Overlap = $\frac{P}{200\%} \times$ db

Prop. Band for Heating X Input Range / 100% =	#of units in the ProportionalBand for Heating
Prop. Band for Cooling X Input Range / 100% =	# of units in the ProportionalBand for Cooling
Deadband/Overlap X Input Range / 100% =	# of units in the Dead Band/Overlap

Input Range = (P-SU minus P-SL)

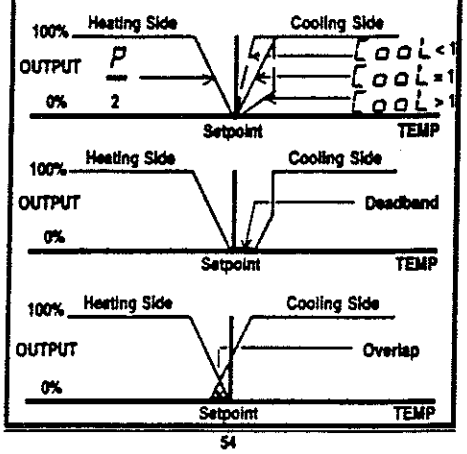

LoC		The Lock-Out is a parameter setting lock feature which inhibits parameter setting changes. The PYZ has two Lock-Out types. One type locks all parameter settings and one type locks all parameter settings except for the main setpoint. When one of the parameter setting lock types is chosen and the appropriate code entered, both primary and secondary menus may be scrolled through and parameter settings viewed but no changes can be made to the parameter settings; the increment and decrement keys on the controller's faceplate are inactive. To unlock, the code value allowing parameter setting changes must be entered. Enter a value dependent on the amount of protection wanted for the parameter settings programmed in your PYZ controller. Program Data Lock-Out: (Code) 0 - All parameter settings are changable 1 - All parameter settings are locked and can not be changed 2 - All parameter settings except the main setpoint are locked and can not be changed

SECONDARY MENU SETTINGS

Parameter	Meaning	Description
P-n1	Control Action and Sensor Break Protection	The Control Action is the direction of the output relative to the process variable. The PYZ can be programmed as either a reverse or direct acting controller. As a reverse acting controller, the PYZ's output decreases as the process variable increases. A heating application would require reverse acting control. As a direct acting controller, the PYZ's output increases as the process variable increases. A cooling application would require direct acting control. Enter the code which establishes the PYZ as either a reverse or direct acting controller. The Sensor Break Protection is the intended direction of the output in the event of a thermocouple or RTD sensor break. The PYZ can be programmed with either upscale or downscale Sensor Break Protection. With Upscale Sensor Break Protection, the process variable goes upscale in the event of a sensor break. The output would go to 0% in a reverse acting application, 100% in a direct acting application. With Downscale Sensor Break Protection, the process variable goes downscale in the event of a sensor break. The output would go to 100% in a reverse acting application, 0% in a direct acting application. Enter the code which establishes the PYZ with either upscale or downscale Sensor Break Protection.

SINGLE OUTPUT TYPE		
Code	Sensor Break Protection	Control Action (Output #1)
0	Upscale	Reverse Acting
1	Downscale	Reverse Acting
16	Upscale	Direct Acting
17	Downscale	Direct Acting

DUAL OUTPUT TYPE			
Code	Sensor Break Protection	Control Action (Output #1)	Control Action (Output #2)
2	Upscale	Reverse Acting	Direct Acting
3	Downscale	Reverse Acting	Direct Acting
18	Upscale	Direct Acting	Direct Acting
19	Downscale	Direct Acting	Direct Acting
34	Upscale	Reverse Acting	Reverse Acting
35	Downscale	Reverse Acting	Reverse Acting
50	Upscale	Direct Acting	Reverse Acting
51	Downscale	Direct Acting	Reverse Acting

P - n2	Input Type	The Input Type is the type of sensor to be used with the PYZ controller in sensing the process variable. The Input Type must be correctly programmed into the controller in order for the controller to perform with the selected sensor type. Depending on the type of sensor to be used, the PYZ comes in two models. One model accepts J,K,R,B,S,T,E thermocouples, and RTDs (PT100). The other model accepts 1-5V dc and 4-20mA dc signals. The thermocouple, RTD (PT100) model has a jumper plug on the controller's main circuit board. Connected to the thermocouple pins, the controller is configured for all the thermocouple types listed. Connected to the RTD pins, the controller is configured for a RTD(PT100). The current/voltage model comes with a 250 ohm precision resistor. Wired directly to the controller, a 1-5V dc signal is read by the PYZ controller. Wired with the 250 ohm resistor across the input terminals, a 4-20mA dc signal can be converted to a 1-5V dc signal which is read by the PYZ controller. After the appropriate physical changes have been made, the controller still needs the correct code for the Input Type to be used. Enter the appropriate code.

INPUT TYPE CODE TABLE		
Code	Input Type	Range
1	RTD (PT 100) (IEC)	-150 .....400 C -238 .....752 F
2	J Thermocouple	0 .....1000 C 32 .....1832 F
3	K Thermocouple	0 .....1200 C 32 .....2192 F
4	R Thermocouple	0 .....1600 C 32.....2912 F
5	B Thermocouple	0 .....1800 C 32.....3272 F
6	S Thermocouple	0 .....1600 C 32 .....2912 F
7	T Thermocouple	-200.....400 C -328.....752 F
8	E Thermocouple	0 .....800 C 32.....1472 F
31	1-5Vdc 4-20mA dc	-1999.....3276 Engineering Units

P - dF	Digital Filter	The Digital Filter is used to filter out the quick changes that occur to the process variable in a dynamic or quick responding application which makes the PYZ control erratically. By slowing down the response time, the PYZ controller averages out the peaks and valleys of a dynamic system which, in turn, stablizes the control. The Digital Filter also aids the PYZ in controlling processes where electrical noise is affecting the input signal. The PYZ responds to 63% of one half of the time value entered. The larger the value entered, the more filter added and the slower the controller reacts to process variable changes. The smaller the value entered, the less filter added and the quicker the controller reacts to process variable changes. Enter as small a value as possible where the PYZ controls as accurately and as stable as possible.

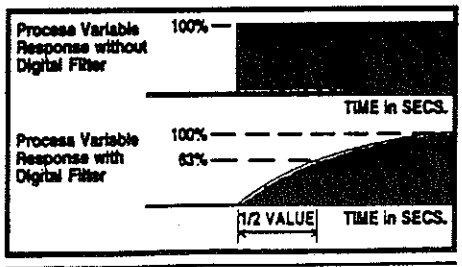

P - SL	Lower Limit Of Input Range	The Lower Limit of Input Range is that value which establishes the desired low limit for the type of input used. The value must be greater than or equal to the input type's lowest limit. See pages 7 & 8. Setpoint settings are restricted to values greater than the low limit. Parameters which are calculated as a pecentage of full scale are affected by this setting. An under-scale error message is indicated on the process variable display when the process variable goes below the Lower Limit of Input Range setting by 30% of full scale. The primary purpose of the Lower Limit of Input Range when used with a thermocouple or RTD sensor input is to limit setpoint settings. Referring to the specification section of this manual, make sure that the lowest limit for your particular sensor type is maintained. Making the input range smaller does not increase the accuracy of the PYZ. The primary purpose of the Lower Limit of Input Range when used with 1-5V dc or 4-20mA dc signal input is to scale the range so that 1V dc on a 1-5V dc signal and 4mA dc on a 4-20mA dc signal equals the low limit of the engineering unit range used. The engineering unit range could be percentage, PSI, GPM, PH, or any range which can be scaled between -1999 and 3276 units. Enter a value which sets the Lower Limit of Input range based on the type of input used.

P-48	**Cold Junction Compensation**	The Cold Junction Compensation is that part of the controller's circuit which reads the temperature near the input terminals and makes adjustments to the incoming thermocouple signal, through an algorithm, based on the reading. The controller uses this input terminal temperature reading in determining the absolute temperature at the hot junction of the thermocouple. The Cold Junction Compensation should only be activated on the thermocouple/RTD(PT100) input models and not on the 1-5V dc/4-20mA dc input models. This parameter should not need to be changed. If, however, you need to verify the setting, make sure the setting code matches the size and input type of your PYZ.

Cold Junction Compensation Codes

Size	Thermocouple / RTD(PT100) Input Models With Cold Junction Compensation	1-5v dc / 4-20ma dc Input Models Without Cold Junction Compensation
PYZ4	3	1
PYZ5 PYZ7 PYZ9	2	0

P-C7	**Load (Heater) Voltage**	The Load (Heater) Voltage is that voltage which is used in powering a bank of heaters when used with the heater break alarm option. Enter a value which equals the Load (Heater) Voltage. Setting: Voltage used for Load (Heater) For the Heater Break Alarm Option Only Not Available with the Ramp-to-Setpoint Option

rS	**Ramp-to-Setpoint**	The Ramp-to-Setpoint is that code which initiates or cancels the Ramp-to-Setpoint function. If the Ramp-to-Setpoint funtion is desired on start-up or after a setpoint change for faster, more dynamic processes, enter the code for Ramp-to-Setpoint regardless of what is programmed for the setpoint ramp rate; the setpoint ramp rate is the speed at which the process approaches main setpoint. If the Ramp-to-Setpoint function is not desired for slower, less dynamic processes, enter the code for Non-Ramping. Enter the code for Ramp-to-Setpoint or Non-Ramping based on the dynamics of the application. Setting: (Code) 0 - Non-Ramping 1 - Ramp-to-Setpoint Not available with the Heater Break Alarm Output Option

PUOF	**Process Variable Offset**	The Process Variable Offset is that amount of offset which shifts the indicated process variable in a posistive or negative direction. The indicated process variable is changed but the measured process variable remains unchanged. This parameter can be used to correct for differences in sensors, sensor placement, and standardization problems. Enter a value which is the difference between the measured process variable and the intended process variable, calculated by some other means. Be careful when using this variable because what you see as the process variable may be very different from the actual process variable.* Setting Range: -1999 to 2000 Indicated Process Variable is Changed Measured Process Variable is Unchanged

EXAMPLE: #1

IF: PV = 100, SV = 100 ADD: PUOF = 2 THEN: PV = 102, SV = 100

EXAMPLE: #2

IF: PV = 100, SV = 100 ADD: PUOF = -10 THEN: PV = 90, SV = 100

* Remember: Indicated PV is Changed, Measured PV is Unchanged

SUOF	**Setpoint Variable Offset**	The Setpoint Variable Offset is that amount of offset which shifts the measured setpoint variable in a posistive or negative direction. The measured setpoint variable is changed but the indicated setpoint variable remains unchanged. This parameter can be used to correct for differences in sensors, sensor placement, and standardization problems. Enter a value which is the difference between the indicated setpoint variable and the intended setpoint variable, calculated by some other means. Be careful when using this variable because what you see as the setpoint variable may be very different from the actual setpoint variable.* Setting Range: -1999 to 2000 Indicated Setpoint Variable is Unchanged Measured Setpoint Variable is Changed

EXAMPLE: #1

IF: PV = 100, SV = 100 ADD: SUOF = 2 THEN: PV = 102, SV = 100

EXAMPLE: #2

IF: PV = 100, SV = 100 ADD: SUOF = -10 THEN: PV = 90, SV = 100

* Remember: Indicated SV is Unchanged, Measured SV is Changed

INPUT SHIFT: To Shift the input properly both the PVOF and SVOF parameters must be adjusted in equal but opposite directions.

EXAMPLE: *Shift the input 5 units in the positive direction*

IF: PV = 100
SV = 100

ADD: PVOF = 5

Indicated	PV=105	Measured	PV = 100
Indicated	SV = 100	Measured	SV = 100

ADD: SVOF = -5
(Change the main setpoint to 105)

Indicated	PV = 105	Measured	PV = 100
Indicated	PV = 105	Measured	PV = 100

.....The input is now shifted 5 units in the positive direction

EXAMPLE: *Shift the input 7 units in the negative direction*

IF: PV = 100
SV = 100

ADD: PVOF = -7

Indicated	PV = 93	Measured	PV = 100
Indicated	SV = 100	Measured	SV = 100

ADD: SVOF = 7
(Change the main setpoint to 93)

Indicated	PV = 93	Measured	PV = 100
Indicated	SV = 93	Measured	SV = 100

.....The input is now shifted 7 units in the negative direction

P - F	**C/F Selection**	The C/F Selection is that function which scales the process variable and other setting variables to either the Celsius or Fahrenheit scale. If using the controller to control a process other than temperature using the 1-5V dc/4-20mA dc input model, the C/F Selection is not important because the scaling is done using the lower limit of input range and upper limit of input range parameters. If using the thermocouple/RTD (PT100) input model, however, the C/F Selection is important in scaling the controller's parameters. No matter what scale the PYZ controller is scaled at, make sure the appropriate symbol is shown in the upper right hand corner of the controller's face plate. This will notify the operater as to which scale the controller is operating at. Enter the code which will scale the PYZ to your scale of choice. Setting: (Code) 0 - degrees Celsius 1 - degrees Fahrenheit

ERROR MESSAGES

Error Indication	Cause	Control Output
UUUU	1: Thermocouple Break with Upscale Break Protection 2: RTD (PT100) Break with Upscale Break Protection	Reverse Acting: Off or less than 4mA dc Direct Acting: On or greater than 20mA dc
LLLL	1: Thermocouple Break with Downscale Break Protection 2: RTD (PT100) Break with Downscale Break Protection 3: Short across a RTD (PT100)	Reverse Acting: On or greater than 20mA dc Direct Acting: Off or less than 4mA dc
UUUU	1: Process Variable (PV) is greater than 130% of Full Scale	Normal Control Output for both Reverse and Direct Acting Applications
LLLL	1: Process Variable (PV) is less than -130% of Full Scale	Normal Control Output for both Reverse and Direct Acting Applications
Heater Break LED (ON)	1: Heater Break Condition	Normal Control Output for Heating Applications

MAINTENANCE

Cleaning:

Clean the face of the PYZ controller with a soft cloth and soapy water. Do not use benzine, thinner, or the like when cleaning as those cleaners will damage the lexan face plate. Do not hose down the controller or use hot caustic solutions. The PYZ is dust and drip proof and meets IEC IP55 standards but is not intended to be hosed down. Also, clean any dust that may be present around the controller as this dust may find it's way inside the PYZ enclosure and potentially short controller circuits.

Periodically check all connections made to the PYZ. Make sure that all connections are secure and that all wires are in good condition. Make sure the terminals are clean and free from any particles which could potentially short terminals. Check for wire fraying at the terminals which could also cause shorting. Verify regularly that the controller is electrically sound and meets all local electrical codes.

Refurbishing:

The PYZ can be refurbished to like new condition. Enclosures and faceplates can be changed by authorized repair persons at authorized repair centers. Take care of the controller and it should last a very long time. Do not bang or scratch the case. Take particularly good care of the faceplate. Do not scratch it or operate the front panel keys with sharp objects such as pencils and instrument screwdrivers which can puncture. If, however, the controller does become damaged, aesthetically, it can be refurbished.

Repairing:

All repairs must be made by authorized repair persons at authorized repair centers. If the controller is opened and tampered with in any manner, other then changing the thermocouple/RTD (PT100) jumper, the warranty is void. All warranty repair determinations are to be made by the authorized repair person after inspection of the controller. All repair work and cost for both warranty and non-warranty repairs will be explained and given before work can begin. For repairs which will cost, a purchase order must be given to begin work. All work will be done in a timely fashion and shipped by normal means unless otherwise arranged.

CALIBRATION

Calibration of the PYZ is needed periodically to insure the precision of the controller. The calibration procedure must be done by an authorized repair person at an authorized repair center. A certificate of conformance and controller label is issued for every controller calibrated showing the test data and verifying conformance to NIST standards. Each unit is calibrated and quality control tested using standards which are tracable to the National Institute for Standards and Technology and which complies with the instrument manufacturer's calibration procedure. A purchase order must be given before instruments can be calibrated.

APPENDIX A

AUTOTUNING

By autotuning, the controller selects what it calculates to be the optimal PID control parameters for a particular process and then stores them in EEPROM memory for future use. The PID parameters are stored so that when the controller is powered up after being down the controller does not need to be autotuned again. The PYZ uses the same autotuned PID parameters until the autotune function is again initiated. The autotune parameters are only good for the process the autotune function was used on. If the setpoint is significantly changed, the input sensor changed, the load or output device changed or relocated, or any other disturbances which might change the dynamics of the system, the autotune function should be performed again. The autotuned control parameters are not always perfect for every application but almost always give the operater a good starting point in which further refinement of the control parameters can be performed manually.

The PYZ's autotuning algorithm is particularly suited for temperature control applications and may not always autotune effectively for other processes. Here are cases where the autotune function does not perform well or doesn't perform at all:

1: The system is effected by process disturbances external to the control loop. Adjacent heater zones, changing material levels, exothermic reactions are examples of process disturbances which are external to the control loop. The PYZ would never be able to autotune such an unstable process.

2: The system is very dynamic. The process variable changes very quickly. Certain pressure and flow applications would be characterized as very dynamic. Because of how the autotune function is performed, a very dynamic system, when autotuning, would create very large overshoots which could damage the process.

3: The system is very insulated and can not cool down in a timely manner. The system retains heat. With such heating systems the autotuning function would take a very long time to complete with questionable results.

In autotune, the PYZ sends test signals to the process. The test signals are 100% power and 0% power at the autotune point. The autotune point can either be at setpoint or 10% of full scale below setpoint. The controller performs as an On/Off controller. See diagram below.

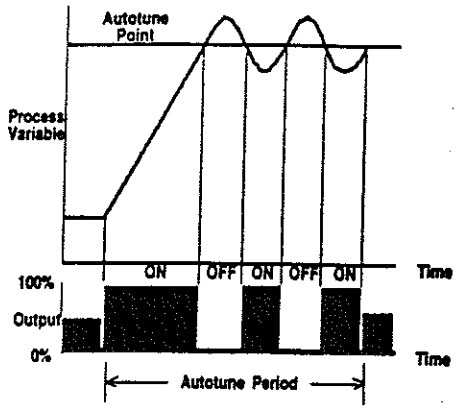

The PYZ then reads the reaction of these test signals on the process. Keep in mind that every process is different and therefore every reaction to the test signals is different. This is why PID parameters are not the same for different processes. The amplitude or lag time which is the overshoot and undershoot of the system when autotuning and the time constant which is the time the process takes to go through one On/Off cycle is measured. See diagram below.

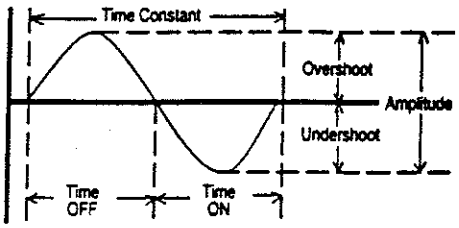

The measurements are then used with the autotune algorithm for calculation of the proper PID parameters for the system. See the PYZ autotune algorithm below.

$$\frac{K}{(1+TS)} e^{-LS}$$

APPENDIX B

MANUAL TUNING

Tune the PYZ controller if any of the following occurs:

- PYZ is installed in a new system
- PYZ is used as a replacement in an existing system
- The input sensor is relocated or changed
- The output device is relocated or changed
- The setpoint is significantly changed
- Any other condition that will alter the dynamics of the system

Proportional Band

The proportional band is a band around the setpoint of the PYZ where the output is between 0% and 100%. The percentage of output is proportional to the amount of error between the setpoint variable (SV) and the process variable (PV). The larger the error the larger the percentage of output. Outside of the proportional band the output is either 0% or 100%.

The proportional band on the PYZ is equidistant from the main setpoint as illustrated below.

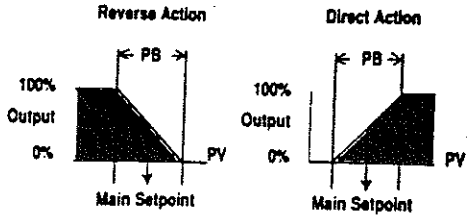

Note: PB = Proportional Band

An example of proportioning would be a vehicle approaching a stop sign at an intersection. If the driver were traveling at 50 MPH and only applied his brakes once at the intersection, his car would skid through the intersection before coming to a full stop. This illustrates how On/Off control acts. If, however, the driver started slowing down some distance before the stop sign and continued slowing down at some rate, he could conceivably come to a full stop at the stop sign. This illustrates how proportional control acts. The distance where the speed of the car goes from 50 to 0 MPH illustrates the proportional band. As you can see, as the car travels closer to the stop sign, the speed is reduced accordingly. In other words, as the error or distance between the car and stop sign becomes smaller, the output or speed of the car is proportionally diminished. Figuring out when the vehicle should start slowing down depends on many variables such as speed, weight, tire tread, and braking power of the car, road conditions, and weather much like figuring out the proportional band of a control process with it's many variables.

The width of the proportional band depends on the dynamics of the system. The first question to ask is, how strong must my output be to eliminate the error between the setpoint variable and process variable? The larger the proportional band, low gain, the less reactive the output becomes. A proportional band too large, however, can lead to process wandering or sluggishness. The smaller the proportional band, high gain, the more reactive the output becomes. A proportional band too small, however, can lead to over responsiveness leading to process oscillation. See the diagrams below.

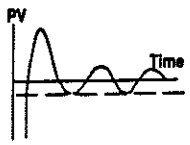

Proportional Band Too Small

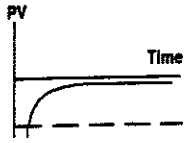

Proportional Band Too Large

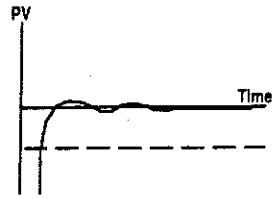

Proportional Band with Correct Width

A proportional band which is correct in width approaches main setpoint as fast as possible while maintaining minimum overshoot. If a faster approach to setpoint is desired and process overshoot is not a problem, a smaller or narrower proportional band may be used. This would establish an over-damped system or one where the output would change greatly, proportional to the error. If process overshoot can not be tolerated and the approach to setpoint does not have to be quick, a larger or wider proportional band may be used. This would establish an under-damped system or one where the output would change little, proportional to the error.

To Calculate Proportional Band:

$$\text{Proportional Band (as a percentage)} = \frac{\text{Proportional Band Range}}{\text{Input Range}} \times 100\%$$

Example:

$$3\% = \frac{30\ C}{1000\ C} \times 100\%$$

$$\text{Proportional Band Range} = \frac{\text{Proportional Band (as a percentage)}}{100\%} \times \text{Input Range}$$

Example:

$$30\ C = \frac{3\%}{100\%} \times 1000\ C$$

To Calculate Gain:

$$\text{Gain} = \frac{\text{Output (Units)}}{\text{Input Error (units)}}$$

Example:

$$33.33 = \frac{100\%}{3\%}$$

Integral Time

With the proportional band alone, the process tends to reach equilibrium at some point away from the main setpoint. This offset is due to the difference between the output needed to maintain setpoint and the output of the proportional band at setpoint. In the case of the PYZ controller where the proportional band is equidistant from the main setpoint, the output is around 50%. If anything more or less then 50% output is required to maintain

setpoint, an offset error will occur. Integral action eliminates this offset. See the diagrams below.

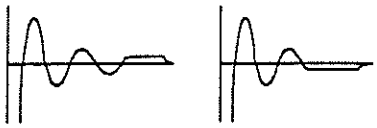

Integral action eliminates offset by adding to or subtracting from the output of the proportional action alone. This increase or decrease in output corrects for offset error within the proportional band in establishing steady-state performance at setpoint. It is not intended to correct for process disturbances. See the following diagram.

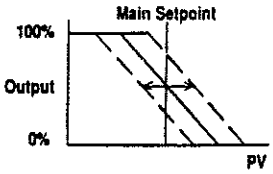

Integral Time is the speed at which the controller corrects for offset. A short Integral Time means the controller corrects for offset quickly. If the Integral Time is too short, the controller would react before the effects of previous output shifts, due to dead time or lag, could be sensed causing oscillation. A long Integral Time means the controller corrects for offset over a long time. If the Integral Time is too long, the offset will remain for some time causing slow responding or sluggish control. See the diagram below.

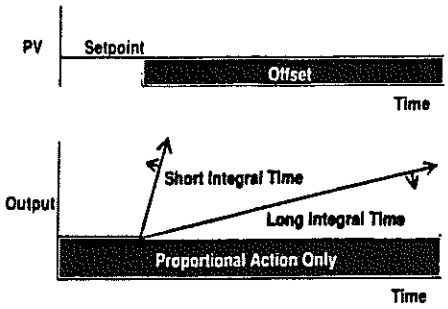

Derivative Time

In the case of a process upset, proportional only or proportional-integral action can not react fast enough in returning a process back to setpoint without overshoot. The derivative action corrects for disturbances providing sudden shifts in output which oppose the divergence of the process from setpoint. See the diagram below.

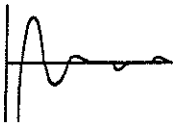

The derivative action changes the rate of reset or integration proportional to the rate of change and lag time of the system. By calculating the rate of change of the process and multiplying it by the lag time which is the time it takes the controller to sense an output change, the controller can anticipate where the process should be and change the output accordingly. This anticipatory action speeds up and slows down the effects of proportional only and proportional-integral actions to return a process to setpoint as quickly as possible with minimum overshoot. See the diagram below.

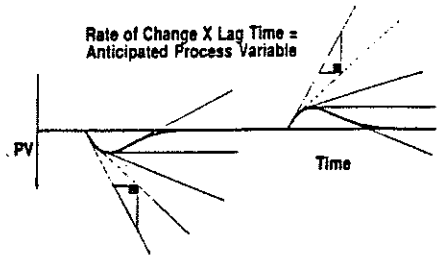

Derivative Time is the amount of anticipatory action needed to return a process back to setpoint. A short Derivative Time means little derivative action. If the Derivative Time is too short, the controller would not react quickly to process distubances. A long Derivative Time means more derivative action. If the Derivative Time is too large, the controller would react too dramatically to process disturbances creating rapid process oscillation. A process which is very dynamic such as pressure and flow applications is more efficiently controlled if the derivative action is turned off because of the oscillation problem which would result. See the diagram below.

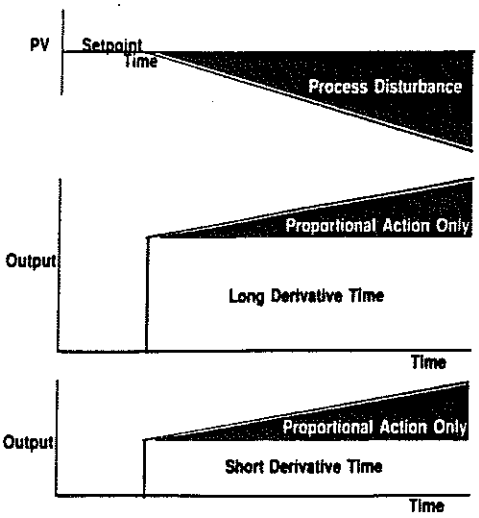

Tuning

Tuning the PYZ, as with any PID loop, requires tuning each parameter separately and in sequence. To achieve good PID control manually, you can use the trial and error method explained below.

1 - **Tune the Proportional Band**
Set Integral Time = 0 (off)
Set Derivative Time = 0 (off)

Start with a large Proportional Band value which gives very sluggish control with noticeable offset and tighten by decreasing the value in half. Analyze the process variable. If the control is still sluggish, tighten by decreasing the value in half again. Continue with the same procedure until the process starts to oscillate at a constant rate. Widen the Proportional Band by 50%, or multiply the setting 1.5 times. From a cold start, test and verify that the Proportional Band allows maximum rise to setpoint while maintaining minimum overshoot and offset. If not completely satisfied, fine tune the value, up or down, as needed and test until correct. The Proportional Band is now tuned.

2 - **Add Integral Time**
Start with a large Integral Time value which gives very sluggish response to process offset and tighten by decreasing the value in half. Analyze the process variable. If the response to process offset is still sliggish, tighten by decreasing the value in half again. Continue with the same procedure until the process starts to oscillate at a constant rate. Increase the Integral Time value by 50%, or multiply the setting 1.5 times. From a cold start, test and verify that the Integral Time allows maximum elimination of offset with minimum overshooting. If not completely satisfied, fine tune the value, up or down, as needed and test until correct. The Integral Time is now tuned.

3 - **Add Derivative Time**
Do not add Derivative Time if the system is too dynamic. Start with a small Derivative Time value which gives sluggish response to process upsets and double the value. Analyze the process variable. If the response to process upsets is still sluggish, double the value again. Continue with the same procedure until the process starts to oscillate at a quick constant rate. Decrease the Derivative Time value by 25%, or multiply the setting .75 times. From a cold start, test and verify that the Derivative Time value allows maximum response to process disturbances with minimum overshoot ing. If not completely satisfied, fine tune the value, up or down, as needed and test until correct. Note that the Derivative Time value is usually somewhere around 25% of the Integral Time value. The Derivative Time is now tuned.

Another tuning method is the closed-loop cycling or Zeigler-Nichols method. According to J.G. Zeigler and N.B. Nichols, optimal tuning is achieved when the controller responds to a difference between setpoint and the process variable with a 1/4 wave decay ratio. That is to say that the amplitude of each successive overshoot is reduced by 3/4 until stabilizing at setpoint. the procedure is explained below.

1 - Integral Time = 0
Derivative Time = 0

2 - Decrease the Proportional Band to the point where a constant rate of oscillation is obtained. This is the response frequency of the system. The Frequency is different for each process.

3 - Measure the Time Constant which is the time to complete one cycle of the response frequency. The Time Constant will be defined as "T" when calculating Integral and Derivative Times.

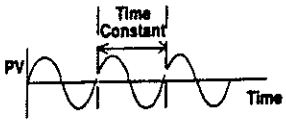

4 - Widen the Proportional Band until only slightly unstable. This is the Proportional Band's Ultimate Sensitivity. The Proportional Band's Ultimate Sensitivity width will be defined as "P" when calculating the actual Proportional Band.

5 - Use the following coefficients in determining the correct PID settings for your particular application.

Control Action	P Setting	I Setting	D Setting
P Only	2P	•	•
PI	2.2P	.83T	•
PID	1.67P	.5T	.125T

APPENDIX C

HEATER BREAK OPTION

The Heater Break Option is used to detect heater break conditions and to energize an alarm relay when such conditions exist. In most cases the option is used to detect the failure of one or more zones in a multi-zoned heater where all individual resistive heater zones are wired in parallel. Failed heater zones would create cold spots in a system which could hamper the process and even ruin product. If cold spots in a system are a problem, the Heater Break Option is an effective way of alerting the operator of a heater break condition, a cause of cold spots.

The PYZ controller is able to detect a heater problem by analyzing the current used by the heater. The actual sensing is done by a current sensing transformer, sold separately, which is placed around the hot lead going to the heater and connected to the controller. The signal sent by the current sensing transformer is timed with the output of the PYZ. When the output is energized the signal sent from the current sensing transformer is analyzed. When the output is de-energized the signal sent from the current sensing transformer is not analyzed. This eliminates the alarm condition turning on and off due to the output condition of the controller. If the signal sent when the output is energized indicates that the current level is below what the Heater Break Alarm is set for, the alarm is energized. The alarm is non-latching. Below is the set-up procedure for the Heater Break Option.

Notes:

1. The Heater Break Option is available on the PYZ5, PYZ7, and PYZ9 controllers only.

2. The Heater Break Option can not be used on the PYZ controller with 4-20mA dc output. The current sensing transformer would pick-up current changes due to fluctuating power output, between 0% and 100%, which would result in a heater break alarm condition even though no such condition existed.

3. The Cycle Time must be set at 6 secs. or higher in order for the controller to correctly analyze the signal sent by the current sensing transformer.

4. The power supply used should be the same for the PYZ and heater to eliminate current fluctuations due to power differences between different power supplies.

Wiring and Setting:

1. Choose the correct current sensing transformer based on. the maximum current usage of the heater.
0 - 30 Amps (Current Sensing Transformer)(CTL-6-SF)
20 - 50 Amps (Current Sensing Transformer)(CTL-12-S36-8F)

2. Thread the hot lead going to the heater through the donut of the current sensing transformer. Connect the wires of the current sensing transformer to the current sensing transformer input terminals on the back of the controller.

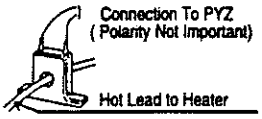

3. Set Heater Break Voltage " P-CT " parameter to line voltage.

4. Set Heater Break Alarm " Hb " parameter
With the current sensing transformer connected and the heater in operation, output energized, change the Heater Break Alarm setting from the maximum current setting for the particular current sensing transformer being used to a lower value. Allow 3 secs. or more between setting changes. Continue lowering the setting until the relay is energized and the "Hb" status indicator is lit. This is the maximum current usage of the heater. Using the same procedure, find the maximum current usage of the heater minus one zone. Set the setpoint in between the two current readings. In this way, the operator knows if one or more zones fail because the current sensed will only be below the Heater Break Alarm setting if one of more zones fail.

Heater Break Set-Up Example for the PYZ5, and PYZ9

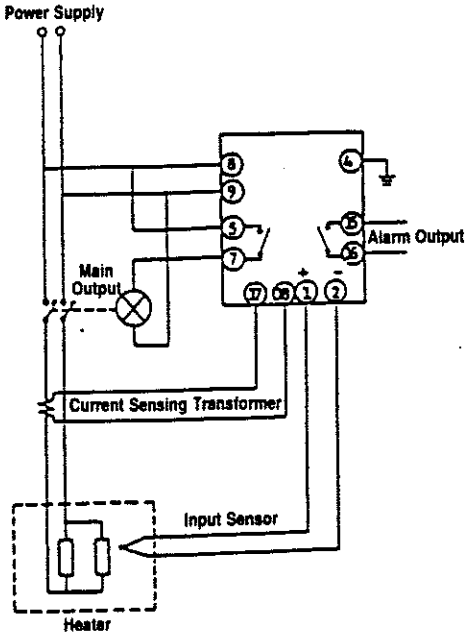

APPENDIX D

HEAT / COOL OPTION

With the Heat/Cool Option, the PYZ can control a temperature application with one input at one main setpoint using two outputs, a heating output and a cooling output. By using a heating and cooling output, a process is able to quickly bring the temperature to setpoint in both directions and to limit the amount of overshoot. The larger the deviation from setpoint, the more output applied to the system on both the heating and cooling sides. Heat/Cool control is a very effective way of controlling exothermic processes, processes that generate their own heat, or processes where ambient temperature is not adequate or fast enough in returning a process that is over temperature back to setpoint.

The two outputs on the PYZ are independent and sent to two different output devices. The PYZ can be equipped with two of the same or two different output types. Output #2 can be relay, solid-state relay, DC voltage (pulsed), or 4-20mA dc, regardless of what Output #1 is. Output #2 type must be specified when ordering.

The PYZ controls the cooling side with three additional parameters, TC2, COOL, and DB. Each is explained below:

TC2 Because Output #2 is not necessarily the same as Output #1, the cycle time may be different. TC2 is the cycle time for output #2.

Cool Because the cooling power may not necessarily be the same as the heating power, the cooling proportional band may need to be different from that of the heating proportional band. COOL is the proportional band coefficient for cooling.

db Where you want the heating action to stop and the cooling action to begin is the function of the deadband/overlap parameter. Deadband is that area where neither outputs are energized. Overlap is that area where both outputs are energized. DB is the amount of deadband/overlap.

Notes:

1. The Heat/Cool Option is available on the PYZ5, PYZ7, and PYZ9 controllers only.
2. Output #2 type can be the same or different than Output #1type (Relay, Solid-State Relay, DC Voltage (Pulsed), or 4-20mA dc).
3. Integral and Derivative Times are the same for both the heating and cooling sides of a process with PID control because the response frequency, time constant, of the system does not change at main setpoint when cooling is added.
4. The Proportional Band for heating and cooling are almost always different. Rarely does the same amount, percentage, of cooling output remove the same percentage of process error as the heating output does. The Cooling Proportional Band must be manually and separately tuned.
5. If the heating side is set for On/Off control, the cooling side will be set for On/Off control also. Regardless of what the COOL parameter is set for, if the Proportional Band is set for zero, the Heating Proportional Band and the Cooling Proportional Band will always be zero or On/Off.
6. If the cycle times of one or both outputs are long and the process dynamic, there is a good chance that both outputs will be cycling on and off at the same time around main setpoint. This is evident if one or both outputs are relay.
7. The Deadband/Overlap is not intended to create a second setpoint some distance away from main setpoint for Output #2 to control. Deadband/Overlap is used to separate or converge the Heating Proportional Band and the Cooling Proportional Band as they work together to control at a single setpoint.
8. Autotune is not effective on the cooling side of Heat/Cool control. Autotune for heat only and then manually tune the cooling parameters.

Wiring and Setting:

1. Make sure that your PYZ has the correct output type installed for Output #2. Verify that the TC2, COOL, and DB parameters are indicated in the primary (setpoint) menu.
2. Wire your cooling load to the Output #2 terminals located on the back of your PYZ controller. Follow the instructions located under the "WIRING: Wiring Output #2" section of this manual. Wiring procedures differ depending on the output type for Output #2.
3. In the secondary (system) menu, program the correct code for Heat/Cool action. See Page 57 for the complete code tables. In most cases, the correct code will be "2". (Reverse Action on Output #1, Direct Action on Output #2, Upscale Sensor Break Protection).
4. In the primary (setpoint) menu, program TC2, the cycle time for Output #2. Remember that longer cycle times, for more dynamic systems, mean on/off cycling of both heating and cooling actions around setpoint. Also keep in mind that TC2 will differ depending on the type of output for Output #2. The table below is a general guide to TC2 settings. Also see page 52

Output #2 Type	Setting (Secs.)
Relay	30
Solid-State Relay	1
DC Voltage (Pulsed)	1
4-20mA dc	Not Indicated or 0

5. Autotune or manually tune the PID parameters of your PYZ controller. Autotune will work for the heating PID parameters but not on the cooling parameters. You must manually tune the cooling parameters. See how the PID parameters are used on a Heat/Cool application below.

Heating Side	Cooling Side
Heating Proportional Band [P/2]	Cooling Proportional Band [P/2 X COOL]
I	I (Same as for Heating)
D	D (Same as for Heating)

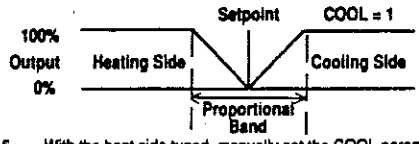

6. With the heat side tuned, manually set the COOL parameter or Proportional Band Coefficient for Cooling. If the cooling output is less powerful than the heating output, the Cooling Proportional Band must be narrower than the Heating Proportional Band; the COOL parameter would be less than "1". If the cooling output is more powerful than the heating output, the Cooling Proportional Band must be wider than the Heating Proportional Band; the COOL parameter would be more than "1".

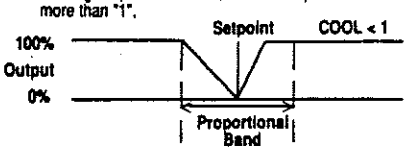

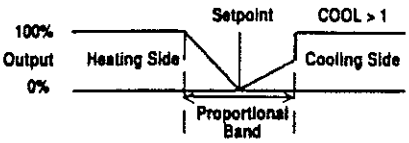

7. Finally, you can add a Deadband/Overlap. A Deadband is the area between where the Heating Proportional Band ends and the Cooling Proportional Band begins. Neither output is energized within a Deadband. An Overlap is the area where the Heating Proportional Band and the Cooling Proportional Band overlap each other. Both outputs are energized within an Overlap area. The programmed Deadband/Overlap parameter can be within -50% to +50% of the Heating Proportional Band. To establish a Deadband, the Deadband/Overlap parameter would need to be programmed somewhere between 0% and 50% of the Heating Proportional Band. To establish an Overlap, the Deadband/Overlap parameter would need to be programmed somewhere between -50% and 0% of the Heating Proportional Band.

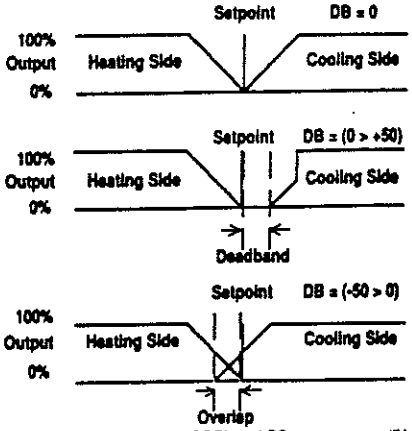

8. Manually fine tune the COOL and DB parameters until just the right amount of cooling, to maintain setpoint, is achieved. Refer to pages 52-54 for more information on the cooling parameters in setting up the PYZ for Heat/Cool operation.

QUICK REFERENCE

PRIMARY (SETPOINT) MENU

Parameter	Item	Meaning	Description
SV	SV	Main Setpoint	Settable within the Input Range
P	P	Proportional Band	Setting Range: 0 to 999.9% For On/Off Control set to "0"
I	I	Integral Time (Reset)	Setting Range: 0 to 9999 secs. Integral Action is turned off when set to "0"
d	D	Derivative Time (Rate)	Setting Range: 0 to 3600 secs. Derivative Action is turned off when set to "0"
AL	AL	Low Alarm Setpoint	Settable within the Input Range Not Indicated without the Alarm Output Option
AH	AH	High Alarm Setpoint	Settable within the Input Range Not Indicated without the Alarm Output Option
TC	TC	Cycle Time (Output #1)	Setting Range: 0 to 150 secs. Not Indicated with Current Output For On/Off Control set to "0" "0" = 0.5 secs.
HYS	HYS	Hysteresis (Output #1)	Setting Range: 0.0 to 20.0% Full Scale
Hb	Hb	Heater Break Alarm	Setting Range: 0.0 to 50.0 amps Not Indicated without the Heater Break Alarm Output Option Not Available with the Ramp-to-Setpoint Option Alarm is turned off when set to "0"

PROGRAMMING

Srr	Srr	Setpoint Ramp Rate	Setting Range: .1 to 999 Units /min. Not Indicated without the Ramp-to-Setpoint Option Not Available with the Heater Break Alarm Output Option Function is turned off when set to "0"
AT	AT	Autotuning	Sets PID Parameters Automatically (Reverse or Direct) 0 - No Autotuning 1 - Standard Autotuning 2 - Below Setpoint Autotuning (10% Full Scale Below Setpoint)
TC2	TC2	Cycle Time (Output #2)	Setting Range: 0 to 150 secs. Not Indicated without Control Output #2 Option Not Indicated with Current Output "0" = 0.5 secs.
CoOL	CooL	Proportional Band Coefficient for Cooling	Setting Range: 0.1 to 100.0 Not Indicated without Control Output #2 Option For On/Off Control set to "0"
db	db	Dead Band/ Overlap	Setting Range: -50.0 to 50.0 of Proportional Band Not Indicated without Control Output #2 Option
LoC	LoC	Lock	Program Data Lock: (Code) 0 - All Data is Selectable 1 - All Data is Locked 2 - All Data except for Main Setpoint is Locked

SECONDARY (SYSTEM) MENU

Parameter	Item	Meaning	Description
P-n1	P-n1	Control Action	Setting Control Action: (Code) Reverse or Direct Setting Sensor Break Protect.: (Code) Upscale or Downscale See Control Action Table for Codes
P-n2	P-n2	Input Type	Setting Input Type: (Code) Thermocouple or RTD Model Current or Voltage Model See Input Table for Codes
P-dF	P-dF	Digital Filter	Setting Range: (Formula) 0 to 201 1/2 of Setting = 63% Response Time
P-SL	P-SL	Lower Limit of Input Range	Setting Range: -1999 to 3278 Units
P-SU	P-SU	Upper Limit of Input Range	Setting Range: -1999 to 3278 Units
P-Ab	P-Ab	Alarm Type	Setting: (Code) Choices of Deviation, Absolute, and Combination Type Alarm Configurations See Alarm Type Table for Codes
P-An	P-An	Alarm Hysteresis	Setting Range: 0 - 255 Units
P-dP	P-dP	Decimal Point Position (Resolution)	Setting: (Code) 0 - Integers 2 - Tenths of a Unit 4 - Hundredths of a Unit 8 - Thousandths of a Unit

P-48	P-48	Cold Junction Compensation	Setting: (Code) 0 - Without CJC (PYZ5, PYZ7, PYZ9) 1 - Without CJC (PYZ4) 2 - With CJC (PYZ5, PYZ7, PYZ9) 3 - With CJC (PYZ4) Not to be Changed
P-C7	P-CT	Load (Heater) Voltage	Setting: Voltage used for Heater For the Heater Break Alarm Option Only Not Available with the Ramp-to-Setpoint Option
rS	rS	Ramp-to-Setpoint	Setting: (Code) 0 - Non-Ramping 1 - Ramp-to-Setpoint Not Available with the Heater Break Alarm Output Option
PUOF	PVOF	Process Variable Offset	Setting Range: -1999 to 2000 Units Indicated Process Variable is Changed Measured Process Variable is Unchanged
SUOF	SVOF	Setpoint Variable Offset	Setting Range: -1999 to 2000 Units Indicated Setpoint Variable is Unchanged Measured Setpoint Variable is Changed
P-F	P-F	C/F Selection	Setting: (Code) 0 - C (degrees Celsius) 1 - F (degrees Fahrenheit)

YOUR PYZ SETTINGS

PRIMARY MENU

Parameter	Setting
SV	200
P	0
I	0
d	0
AL	0
AH	250
TC	0
HYS	1
Hb	0
Srr	0
A1	0
TC2	0
CooL	0
db	
LoC	0

SECONDARY MENU

Parameter	Setting
P-n1	17
P-n2	3
P-dF	4
P-SL	32
P-SU	2100
P-Ab	2
P-An	02
P-dP	0
P-48	3
P-C7	
rS	0
PUOF	0
SUOF	0
P-F	1

NOTES:

OMRON

Model H3CA SOLID-STATE TIMER

INSTRUCTION MANUAL

Model H3CA SOLID-STATE TIMER

This manual primarily describes precautions required in installing and wiring the timer. When using the timer, please refer to the pertinent catalog for detailed information.

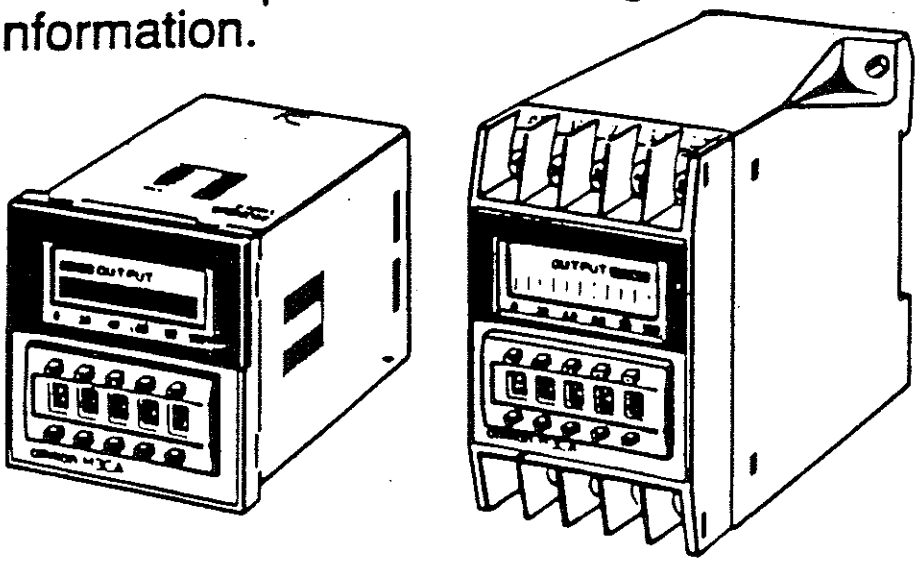

OMRON MANUFACTURING OF AMERICA, INC.
PRINTED IN U.S.A. 0648456-0A

AVAILABLE TYPES

Operation/resetting system		Time-limit operation/self-resetting/ external resetting*		Time-limit operation/self-resetting	Time-limit operation/self-resetting
Operation mode		8 operation modes (selectable)**		ON-delay operation	ON-delay operation
Terminal form		11-pin round socket	Front screw	8-pin round socket	8-pin round socket
Time-limit contact		SPDT		DPDT	SPDT
Instantaneous contact		–		–	SPDT
Equipped with control output ON/OFF and remaining time indicators	Surface mounting	H3CA-A (with P2CF-11 socket)	H3CA-FA	H3CA-8 (with P2CF-08 socket)	H3CA-8H (with P2CF-08 socket)
	Track mounting				
	Flush mounting	H3CA-A (with Y92F-30 adapter)	–	H3CA-8 (with Y92F-30 adapter)	H3CA-8H (with Y92F-30 adapter)

DIMENSIONS

● H3CA-A/H3CA-8(-8H)

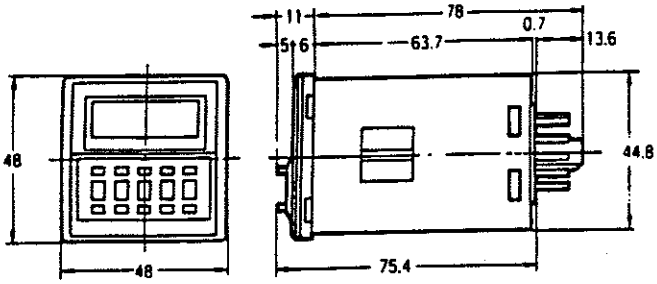

NOTES:
1. *The operation/resetting system depends on the selected operation mode. For details, see "TIMING CHARTS (OPERATION MODES)."
2. **The 8 operation modes are as
   A: ON-delay operation
   B: Flicker operation
   C: Signal ON-/OFF-delay operation (I)
   D: Signal OFF-delay operation (I)
   E: Interval operation
   F: One-shot and flicker operation
   G: Signal ON-/OFF-delay operation (II)
   H: Signal OFF-delay operation (II)

● H3CA-FA

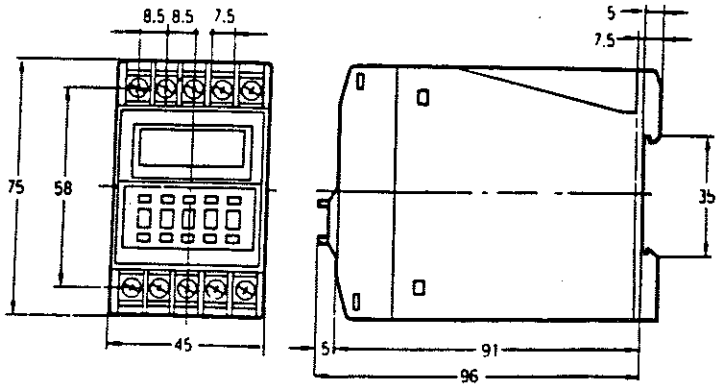

● Mounting holes

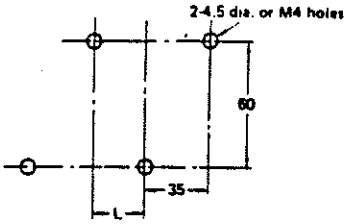

NOTE: When mounting two or more timers in line, dimension L between the two juxtaposed timers should be 10mm min.

HINTS ON CORRECT USE

• HOW TO CHANGE OPERATION MODE

Operate the pushbuttons of the thumbwheel switch, located at the leftmost position on the front panel, to set the operation mode. Eight operation modes (A, B, C, D, E, F, G, and H) are selectable and the selected operation mode is displayed in the operation mode display window.

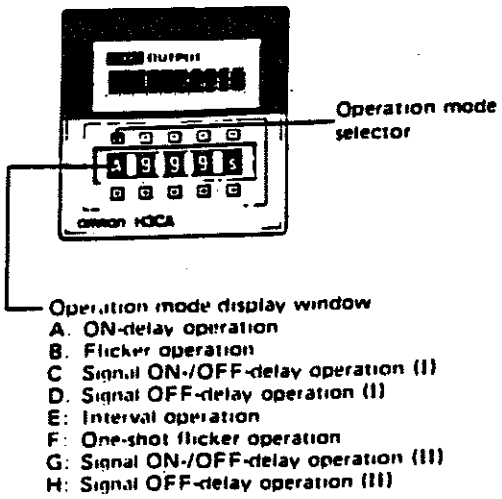

NOTE The operation mode is fixed to "A" in type H3CA-8, H3CA-8H.

• HOW TO CHANGE TIME UNIT AND RATED TIME

Operate the pushbuttons of the rightmost thumbwheel switch to select the desired time unit. Seven time units (0.1s, s, 0.1m, m, 0.1h, h, or 10h) are selectable and the selected time unit is displayed in the time unit display window.
The desired rated time is specified by operating the 3 thumbwheel switches in the middle of the front panel. The range of a rated time is 001 to 999 for each time unit.

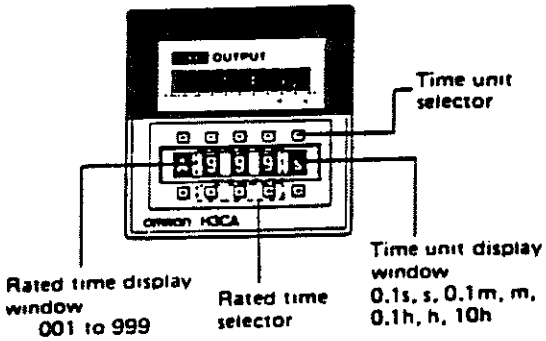

CONNECTIONS

• H3CA-A

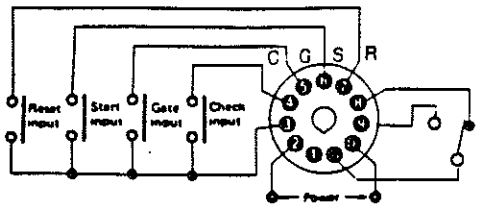

• H3CA-FA

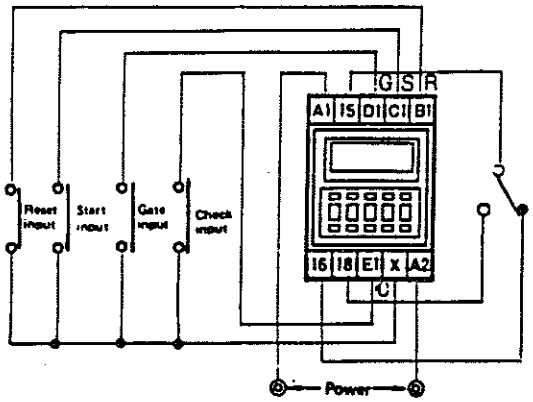

• H3CA-8

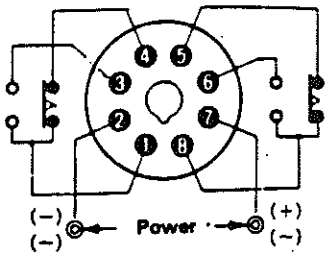

• Connection of contact signal inputs
Connect the start input contact between terminals ⑤ and ⑥, the reset input contact between terminals ⑤ and ⑦, the gate input contact between terminals ③ and ⑤, and the check input contact between terminals ③ and ④, respectively.

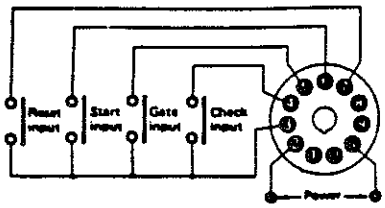

For each signal input contact, use a gold-plated contact of high contact reliability. Be sure that these input signals satisfy the following requirements: a resistance of 1kΩ max. and a residual voltage of 1V max. when the contact makes.

• Connection of solid-state signal inputs
Connect the start input transistor between terminals ③ and ⑥, the reset input transistor between terminals ③ and ⑦, the gate input transistor between terminals ③ and ⑤, and the check input transistor between terminals ③ and ④, respectively.

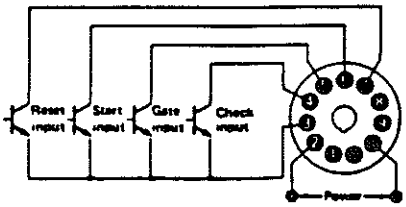

For signal input, use a transistor of open collector type with characteristics: V_{CEO} =20V min., $V_{CE(S)}$ =1V max., I_C=50mA min. and I_{CEO} =0.5μA max. In addition, be sure that these input signals satisfy the following requirements: a resistance of 1KΩ max. when the transister is ON, residual voltage of 1V max. when the transistor is ON, and a resistance of 200kΩ min. when the transistor is OFF.

From a solid-state circuit (proximity switch, photoelectric switch, or the like) with the rated power supply voltage ranging from 6 to 30 VDC, input signals can also be applied by other than the open collector type transistor as shown in the following diagram.

The input signal from the solid-state circuit is applied when output transistor Tr turns ON. In terms of signal voltage, the signal is input when it goes from high level to low level. Again, the residual voltage should be 1V max. when the transistor is ON. As the current output from the timer to Tr is approximately 0.1mA, this connection is possible provided the residual voltage is kept to the 1V maximum.

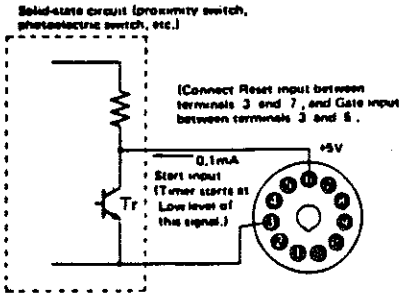

NOTE:
Excepting the wirings for power supply circuit, avoid the laying of input signal wires in parallel or in the same conduit with high-tension or power lines. It is recommended to use shielded wires or wiring with independent metal conduits for the shortest possible distance.

• H3CA-8H

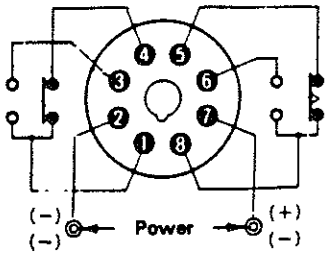

DIN MARKING

(DIN 461995)

• H3CA-A

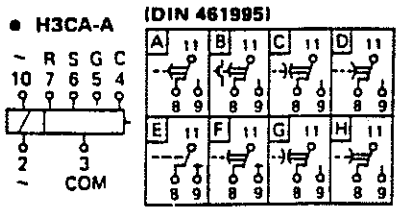

• H3CA-FA

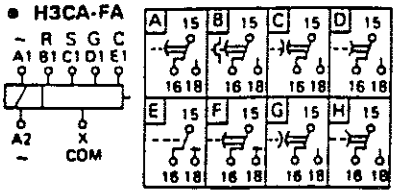

• H3CA-8

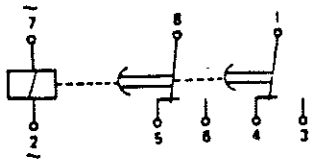

• H3CA-8H

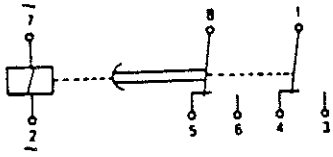

■ TIMING CHARTS (OPERATION MODES)

● H3CA-A(FA)

NOTES : 1. The minimum signal input time is 0.05 sec.
2. The minimum resetting time is 0.5 sec in type H3CA-A, H3CA-FA.
3. The minimum resetting time is 0.1 sec in type H3CA-8, H3CA-8H.

A mode ON-delay operation

● **Signal start**

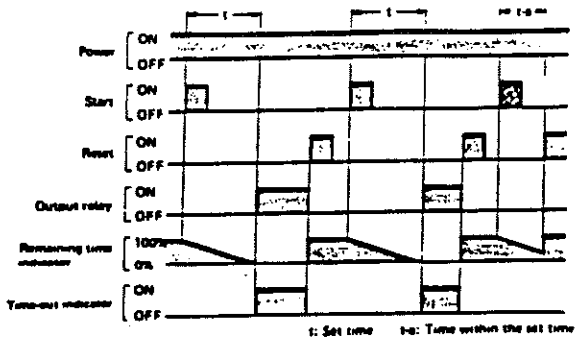

● **Power-ON start/Power-OFF reset**

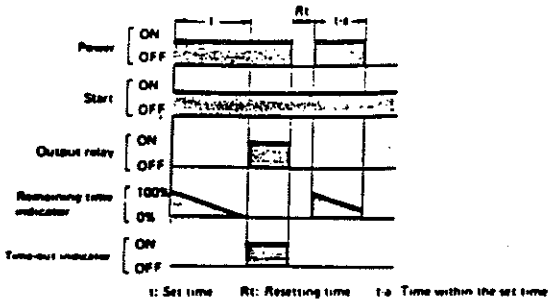

B mode Flicker operation

● **Signal start**

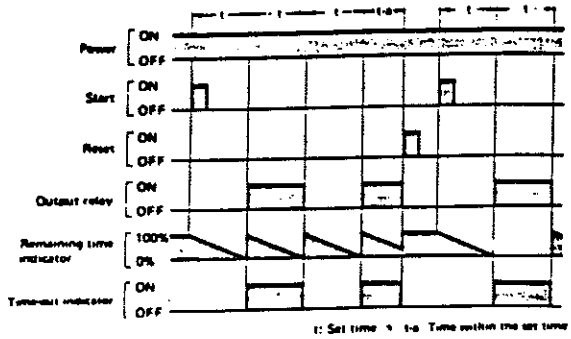

● **Power-ON start/Power-OFF reset**

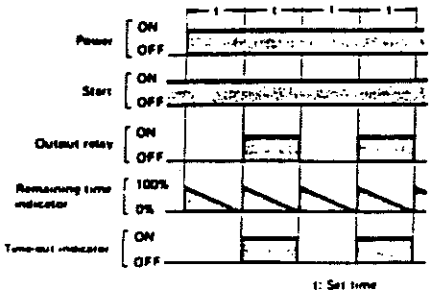

C mode Signal ON-/OFF-delay operation (Type I)

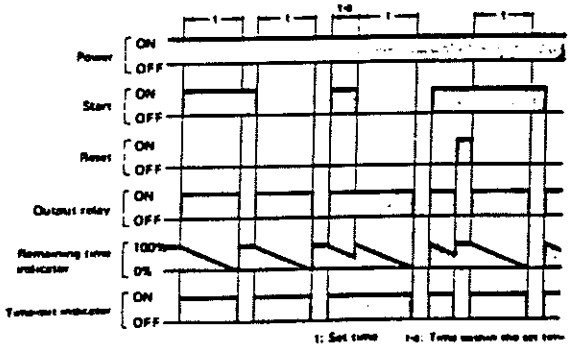

NOTE Type I refers to the version in which the output relay operates when Start signal is ON.

D mode Signal OFF-delay operation (Type I)

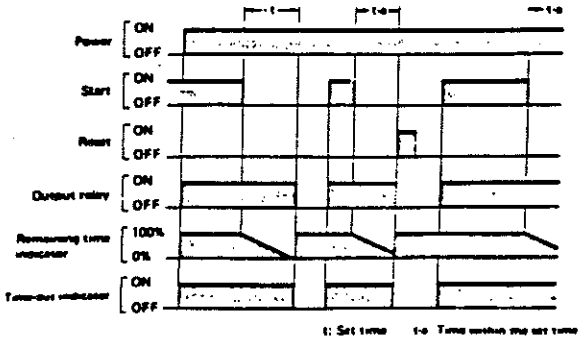

NOTE Type I refers to the version in which the output relay operates when Start signal is ON.

E mode Interval operation

- **Signal start**

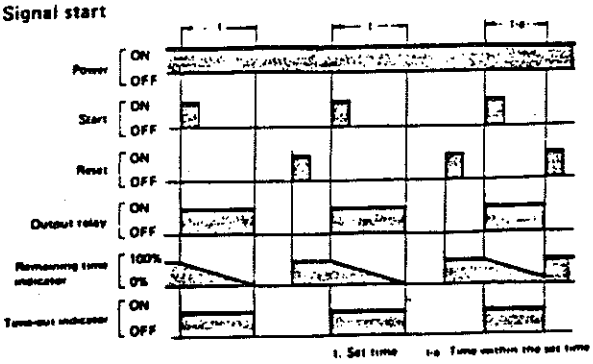

- **Power-ON start/Power-OFF reset**

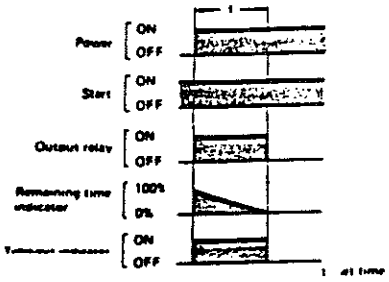

F mode One-shot and flicker operation

- **Signal start**

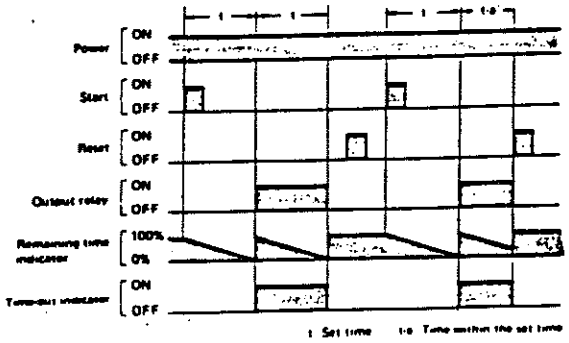

- **Power-ON start/Power-OFF reset**

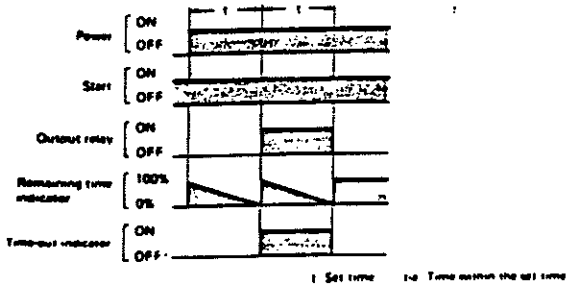

G mode Signal ON-/OFF-delay operation (Type II)

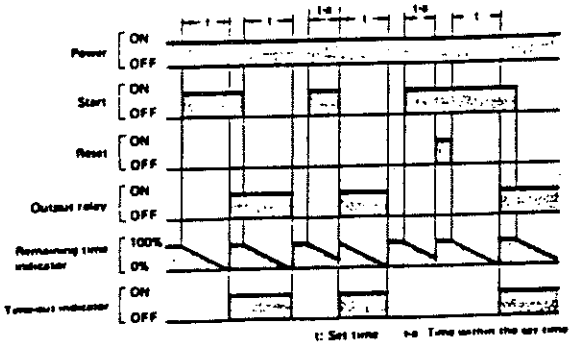

NOTE Type II refers to the version in which the output relay does not operate when Start signal is ON

H mode Signal OFF-delay operation

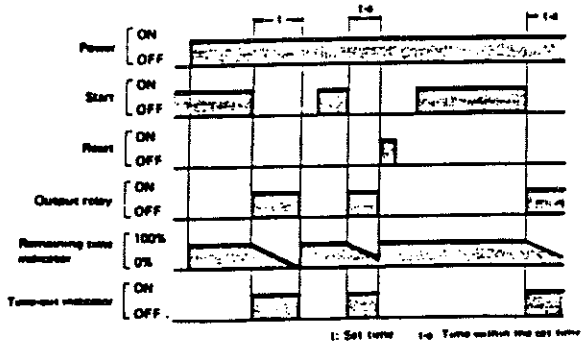

NOTE Type II refers to the version in which the output relay does not operate when Start signal is ON.

CR104P Heavy-Duty Indicating Lights

600 Volts Maximum AC/DC
10 Amperes Continuous
Suitable for Use in NEMA Type 1, 3, 3R, 4, 4X, 12 and 13 Applications①

Units are supplied factory assembled when ordered with lenses.

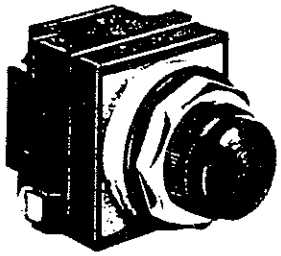

Standard indicating light

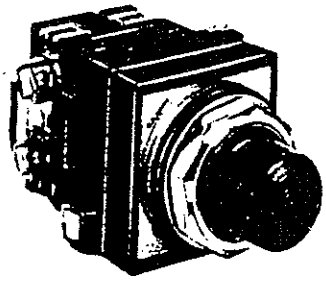

Push-to-test indicating light

7

Standard and Push-to-test Indicating Light Units, Transformer Type

Operating Voltage	Color of Lens	Standard Unit Catalog Number② CR104	List Price, GO-10G	Push-to-test Unit Catalog Number② CR104	List Price, GO-10G
Transformer Type with 6-Volt Secondary, No. 755 Lamp					
120 Volts (60-50 Hz)	Red	PLG32R	$64.20	PLT32R	$82.20
	Green	PLG32G	64.20	PLT32G	82.20
	Amber	PLG32M	64.20	PLT32M	82.20
	Blue	PLG32L	64.20	PLT32L	82.20
	White	PLG32W	64.20	PLT32W	82.20
	Yellow	PLG32E	64.20	PLT32E	82.20
	Clear	PLG32C	64.20	PLT32C	82.20
	Less Lens③	PLG32	60.00	PLT32	78.00
240 Volts (60-50 Hz)	Red	PLG33R	64.20	PLT33R	82.20
	Green	PLG33G	64.20	PLT33G	82.20
	Amber	PLG33M	64.20	PLT33M	82.20
	Blue	PLG33L	64.20	PLT33L	82.20
	White	PLG33W	64.20	PLT33W	82.20
	Yellow	PLG33E	64.20	PLT33E	82.20
	Clear	PLG33C	64.20	PLT33C	82.20
	Less Lens③	PLG33	60.00	PLT33	78.00
480 Volts (60-50 Hz)	Red	PLG34R	64.20	PLT34R	82.20
	Green	PLG34G	64.20	PLT34G	82.20
	Amber	PLG34M	64.20	PLT34M	82.20
	Blue	PLG34L	64.20	PLT34L	82.20
	White	PLG34W	64.20	PLT34W	82.20
	Yellow	PLG34E	64.20	PLT34E	82.20
	Clear	PLG34C	64.20	PLT34C	82.20
	Less Lens③	PLG34	60.00	PLT34	78.00
600 Volts (60-50 Hz)	Red	PLG35R	64.20	PLT35R	82.20
	Green	PLG35G	64.20	PLT35G	82.20
	Amber	PLG35M	64.20	PLT35M	82.20
	Blue	PLG35L	64.20	PLT35L	82.20
	White	PLG35W	64.20	PLT35W	82.20
	Yellow	PLG35E	64.20	PLT35E	82.20
	Clear	PLG35C	64.20	PLT35C	82.20
	Less Lens③	PLG35	60.00	PLT35	78.00

Notes: Catalog Number and price do not include nameplate. All nameplates must be ordered as a separate item from pages 7-26 and 7-27.
Resistor forms of standard and push-to-test indicating lights are available. Contact nearest GE Electrical Distribution & Control sales office for proper selection and pricing.

Standard and Push-to-test Indicating Light Units, Full Voltage

Operating Voltage	Color of Lens	Standard Unit Catalog Number② CR104	List Price, GO-10G	Push-to-test Unit Catalog Number② CR104	List Price, GO-10G
Full Voltage Type					
6 Volt④ (#755 Lamp)	Red	PLG16R	$52.20	PLT16R	$70.20
	Green	PLG16G	52.20	PLT16G	70.20
	Amber	PLG16M	52.20	PLT16M	70.20
	Blue	PLG16L	52.20	PLT16L	70.20
	White	PLG16W	52.20	PLT16W	70.20
	Yellow	PLG16E	52.20	PLT16E	70.20
	Clear	PLG16C	52.20	PLT16C	70.20
	Less Lens③	PLG16	48.00	PLT16	66.00
12 Volts④ (#756 Lamp)	Red	PLG17R	52.20	PLT17R	70.20
	Green	PLG17G	52.20	PLT17G	70.20
	Amber	PLG17M	52.20	PLT17M	70.20
	Blue	PLG17L	52.20	PLT17L	70.20
	White	PLG17W	52.20	PLT17W	70.20
	Yellow	PLG17E	52.20	PLT17E	70.20
	Clear	PLG17C	52.20	PLT17C	70.20
	Less Lens③	PLG17	48.00	PLT17	66.00
24 Volts④ (#1819 Lamp)	Red	PLG18R	52.20	PLT18R	70.20
	Green	PLG18G	52.20	PLT18G	70.20
	Amber	PLG18M	52.20	PLT18M	70.20
	Blue	PLG18L	52.20	PLT18L	70.20
	White	PLG18W	52.20	PLT18W	70.20
	Yellow	PLG18E	52.20	PLT18E	70.20
	Clear	PLG18C	52.20	PLT18C	70.20
	Less Lens③	PLG18	48.00	PLT18	66.00
120 Volts④ (#120PSB Lamp)	Red	PLG22R	52.20	PLT22R	70.20
	Green	PLG22G	52.20	PLT22G	70.20
	Amber	PLG22M	52.20	PLT22M	70.20
	Blue	PLG22L	52.20	PLT22L	70.20
	White	PLG22W	52.20	PLT22W	70.20
	Yellow	PLG22E	52.20	PLT22E	70.20
	Clear	PLG22C	52.20	PLT22C	70.20
	Less Lens③	PLG22	48.00	PLT22	66.00

① When mounted in enclosures rated for those same applications. For some NEMA Type 4X applications, protective caps will improve corrosion resistance.
② "CR104PXG . . ." Catalog Number on light unit *label* identifies only the "power source" component of each complete unit listed above.
③ Select required lens from page 7-23 and order as a separate item.
④ 6-, 12-, and 24-Volt units have same lamp socket; lamps are therefore interchangeable for voltage change.

References:
Descriptive bulletin GEA-10877
Distributor mailer GED-7021

Nameplate Selection ..... **pages 7-26, 7-27**
Drilling Plan and Dimensions ..... **page 7-28**
Lamp Ordering Information ..... **page 7-2**

Prices and data subject to change without notice

CR104P Heavy-Duty Push Buttons

600 Volts Maximum AC/DC
10 Amperes Continuous

Features

- **Ease of assembly**—one screw contact block mounting. Octagonal ring provides ease in front panel mounting and enclosure applications.
- **Greater torque**—due to the eight-sided ring design, greater torque can be developed during assembly and installation to provide oiltightness.
- **Stocking inventories reduced**—forms may be furnished as complete units or as components, allowing building block construction from a minimum of stock.
- **Color Coded**—colored knobs and caps are available in kit forms for easy field conversion.

Ordering Directions

Order by complete Catalog Number. Example: CR104PBG91B1 at **$34.20, GO-10G**. To order complete devices, see information on pages 7-3 through 7-19. Catalog Number and price do not include nameplate. All nameplates must be ordered as a separate item from pages 7-26 and 7-27.

7

Description

Standard and illuminated push buttons and selector switches are available. Both push buttons and selector switches are available with key or for conventional operation. The CR104P push-button line also includes press-to-test and standard indicating lights, mushroom head, joy stick, push-pull and push-push operators.

Chrome-plated octagonal rings project an attractive, quality appearance. Positive feel selector switches give a quality touch in all illuminated, solid color, spring return, and maintained units.

Application

Especially adapted to machine-tool service or any application where oil or coolant is present. The convenient one-hole mounting makes this line suitable for general purpose use in equipment of all kinds where panel mounting is possible. This line is ideal for applications where oiltightness, watertightness and long life are essential.

All units are suitable for use in NEMA Type 1, 3, 3R, 4, 4X①, 12 and 13 applications when mounted in enclosures rated for those same applications.②

① Although not needed on all Type 4X applications, protective caps provide improved resistance to some corrosive materials. They are not required by UL.
② CR104PTP units are suitable for Type 1, 12, and 13 applications only.
③ Maximum make and break currents are 60 and 6 Amperes respectively for voltages of 120 and below.

Contact Ratings – Standard Contact Blocks

AC Ratings, NEMA A600 Heavy Pilot Duty

Maximum AC Voltage	Continuous Current Amperes	AC Voltamperes @ 60/50 Hertz③	
		Make	Break
600	10	7200	720

DC Ratings, NEMA P600

Maximum Make or Break Amperes		
125 Volts	250 Volts	600 Volts
1.1	0.55	0.2

Contact Ratings – Logic Reed Switch Contact Blocks

	AC Ratings	DC Ratings
Operating Voltage Continuous Current (Maximum) Resistive, Watts (Voltamperes)	2-120 Volts .001-.15 Ampere 8 Voltamperes Maximum	2-30 Volts .001-.15 Ampere 4.5 Voltamperes Maximum

References:
Descriptive bulletin GEA-10877
Distributor manual GED-7021

Nameplate Selection ..... **pages 7-26, 7-27**
Drilling Plan and Dimensions ..... **page 7-28**

Prices and data subject to change without notice

CR104P Heavy-Duty, Non-illuminated Push Buttons

600 Volts Maximum AC/DC
10 Amperes Continuous
Suitable for Use in NEMA Type 1, 3, 3R, 4, 4X, 12, and 13 Applications①

Push Button Units (Momentary Contacts)

Units are supplied factory assembled when ordered with contact blocks, except 2⅜-inch diameter mushroom head which is not attached.

Operator Only (Select contact blocks from pg 7-20)			Operator Assembled with 1NO-1NC Contacts		Operator Assembled with 2NO-2NC Contacts		Operator Assembled with 1NO Contact		Operator Assembled with 1NC Contact	
Button Color	Catalog Number CR104	List Price, GO-10G	Catalog Number CR104	List Price, GO-10G	Catalog Number CR104	List Price, GO-10G	Catalog Number CR104	List Price, GO-10G	Catalog Number CR104	List Price, GO-10G
Standard (Flush)										
Black	PBG00B1	$16.20	PBG91B1	$34.20	PBG92B1	$52.20	PBG10B1	$25.20	PBG01B1	$25.20
Red	PBG00R1	16.20	PBG91R1	34.20	PBG92R1	52.20	PBG10R1	25.20	PBG01R1	25.20
Green	PBG00G1	16.20	PBG91G1	34.20	PBG92G1	52.20	PBG10G1	25.20	PBG01G1	25.20
Clear②	PBG00C1	16.20	PBG91C1	34.20	PBG92C1	52.20	PBG10C1	25.20	PBG01C1	25.20
(Combination)③	PBG00U1	16.20	PBG91U1	34.20	PBG92U1	52.20	PBG10U1	25.20	PBG01U1	25.20
(Combination)④	PBG00V1	16.20	PBG91V1	34.20	PBG92V1	52.20	PBG10V1	25.20	PBG01V1	25.20
None⑤	PBG00A1⑥	15.90	PBG91A1⑥	33.90	PBG92A1⑥	51.90	PBG10A1⑥	24.90	PBG01A1⑥	24.90
Extended Button										
Black	PBG00B2	16.20	PBG91B2	34.20	PBG92B2	52.20	PBG10B2	25.20	PBG01B2	25.20
Red	PBG00R2	16.20	PBG91R2	34.20	PBG92R2	52.20	PBG10R2	25.20	PBG01R2	25.20
Green	PBG00G2	16.20	PBG91G2	34.20	PBG92G2	52.20	PBG10G2	25.20	PBG01G2	25.20
Clear②	PBG00C2	16.20	PBG91C2	34.20	PBG92C2	52.20	PBG10C2	25.20	PBG01C2	25.20
(Combination)③	PBG00U2	16.20	PBG91U2	34.20	PBG92U2	52.20	PBG10U2	25.20	PBG01U2	25.20
(Combination)④	PBG00V2	16.20	PBG91V2	34.20	PBG92V2	52.20	PBG10V2	25.20	PBG01V2	25.20
None⑤	PBG00A2⑥	15.90	PBG91A2⑥	33.90	PBG92A2⑥	51.90	PBG10A2⑥	24.90	PBG01A2⑥	24.90
Recessed Button										
Black	PBG00B3	16.20	PBG91B3	34.20	PBG92B3	52.20	PBG10B3	25.20	PBG01B3	25.20
Red	PBG00R3	16.20	PBG91R3	34.20	PBG92R3	52.20	PBG10R3	25.20	PBG01R3	25.20
Green	PBG00G3	16.20	PBG91G3	34.20	PBG92G3	52.20	PBG10G3	25.20	PBG01G3	25.20
Clear②	PBG00C3	16.20	PBG91C3	34.20	PBG92C3	52.20	PBG10C3	25.20	PBG01C3	25.20
(Combination)③	PBG00U3	16.20	PBG91U3	34.20	PBG92U3	52.20	PBG10U3	25.20	PBG01U3	25.20
(Combination)④	PBG00V3	16.20	PBG91V3	34.20	PBG92V3	52.20	PBG10V3	25.20	PBG01V3	25.20
None⑤	PBG00A3⑥	15.90	PBG91A3⑥	33.90	PBG92A3⑥	51.90	PBG10A3⑥	24.90	PBG01A3⑥	24.90
Mushroom Head (1⅜-inch diameter)										
Black	PBM00B5	34.20	PBM91B5	52.20	PBM92B5	70.20	PBM10B5	43.20	PBM01B5	43.20
Red	PBM00R5	34.20	PBM91R5	52.20	PBM92R5	70.20	PBM10R5	43.20	PBM01R5	43.20
Green	PBM00G5	34.20	PBM91G5	52.20	PBM92G5	70.20	PBM10G5	43.20	PBM01G5	43.20
Yellow	PBM00E5	34.20	PBM91E5	52.20	PBM92E5	70.20	PBM10E5	43.20	PBM01E5	43.20
None⑤	PBM00A6	28.20	PBM91A6	46.20	PBM92A6	64.20	PBM10A6	37.20	PBM01A6	37.20
(2⅜-inch diameter)										
Black	PBM00B6	34.20	PBM91B6	52.20	PBM92B6	70.20	PBM10B6	43.20	PBM01B6	43.20
Red	PBM00R6	34.20	PBM91R6	52.20	PBM92R6	70.20	PBM10R6	43.20	PBM01R6	43.20
Green	PBM00G6	34.20	PBM91G6	52.20	PBM92G6	70.20	PBM10G6	43.20	PBM01G6	43.20
Yellow	PBM00E6	34.20	PBM91E6	52.20	PBM92E6	70.20	PBM10E6	43.20	PBM01E6	43.20
None⑤	PBM00A6	28.20	PBM91A6	46.20	PBM92A6	64.20	PBM10A6	37.20	PBM01A6	37.20
Mushroom Head (push to latch, turn to release)										
Red (Only)	PTR20A0R	52.20	PTR20A0R91	70.20	PTR20A0R92	88.20	PTR20A0R1	61.20	PTR20A0R01	61.20

Note: Catalog Number and price do not include nameplate. All nameplates must be ordered as a separate item from pages 7-26, 7-27

① When mounted in enclosures rated for those same applications. For some NEMA Type 4X applications, protective caps will provide improved corrosion resistance.
② To order package of legend inserts, refer to page 7-22.
③ Includes package of one each of black, red, green and yellow color caps.
④ Includes package of one each of orange, blue, brown and white color caps.
⑤ Select required color cap or mushroom-head button from page 7-22. 1⅜ in. and 2⅜ in. dia. operators are interchangeable.
⑥ To order *assembled* units with buttons of unlisted colors, substitute the following letters in place of "A" in Catalog Number: E (Yellow), L (Blue), M (Orange), N (Brown) and W (White). Price is same as those units with buttons of listed colors.

CR104P Heavy-Duty, Non-illuminated Selector Switches

600 Volts Maximum AC/DC
10 Amperes Continuous
Suitable for Use in NEMA Type 1, 3, 3R, 4, 4X, 12 and 13 Applications①

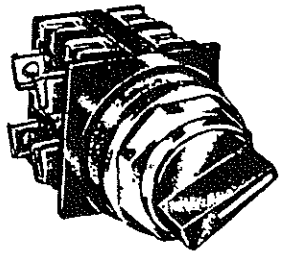

Knob-operated selector switch

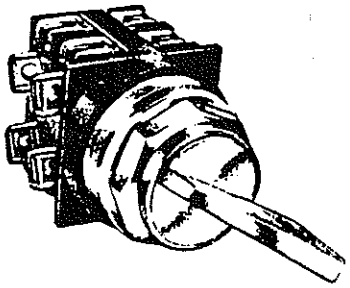

Lever-operated selector switch

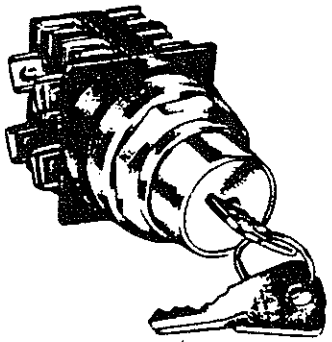

Cylinder lock selector switch

2-Position, Non-illuminated Knob-, Lever-, and Cylinder Lock-operated Selector Switches②

Units are supplied factory assembled when ordered with contact blocks.

Viewed from front of panel: Contacts (Left Right)	Operator Position (O = Open, X = Closed)	Contact Block	Catalog Numbers and Prices: Standard Knob Black③ CR104	List Price, GO-10G	Wing Lever, Chrome④ CR104	List Price, GO-10G	Cylinder Lock, Remove Key from: Left Only CR104	Right Only CR104	Left and Right CR104	Center Only CR104	List Price, GO-10G
Maintained											
Operator Only	↖ ↗	None	PSG21B	$22.20	PSM21	$22.20	PSK21A00L	PSK21A00R	PSK21A00M	-	$58.20
o NC o NO	NC X O NO O X	1NO-1NC 1NO-1NC	PSG21B91 -	40.20 -	PSM21A91 -	40.20 -	PSK21A91L PSK21A91L51⑤	PSK21A91R PSK21A91R51⑤	PSK21A91M PSK21A91M51⑤	- -	76.20 88.20
o NC o o o NO o o	L-NC X O L-NO O X R-NC X O R-NO O X	2NO-2NC	PSG21B92	58.20	PSM21A92	58.20	PSK21A92L	PSK21A92R	PSK21A92M	-	94.20
Spring Return Left To Center											
Operator Only	↖ ↑	None	PSG12B	34.20	PSM12	34.20	-	-	-	PSK12A00C	70.20
o NC o o NO	NC O X NO X O	1NO-1NC 1NO-1NC	PSG12B91 -	52.20 -	PSM12A91 -	52.20 -	- -	- -	- -	PSK12A91C PSK12A91C51⑤	88.20 100.20
o NC o o o NO o o	L-NC O X L-NO X O R-NC O X R-NO X O	2NO-2NC	PSG12B92	70.20	PSM12A92	70.20	-	-	-	PSK12A92C	106.20
Spring Return Right To Center											
Operator Only	↑ ↗	None	PSG63B	34.20	PSM63	34.20	-	-	-	PSK63A00C	70.20
o NC o o NO	NC X O NO O X	1NO-1NC 1NO-1NC	PSG63B91 -	52.20 -	PSM63A91 -	52.20 -	- -	- -	- -	PSK63A91C PSK63A91C51⑤	88.20 100.20
o NC o o o NO o o	L-NC X O L-NO O X R-NC X O R-NO O X	2NO-2NC	PSG63B92	70.20	PSM63A92	70.20	-	-	-	PSK63A92C	106.20

Note: Catalog Number and price do not include nameplate. All nameplates must be ordered as a separate item from pages 7-27 and 7-28. Two keys included with each cylinder lock.

① When mounted in enclosures rated for those same applications. For some NEMA Type 4X applications, protective caps will improve corrosion resistance.

② For additional cam operation information, refer to page 7-28.

③ To order knob in a color other than black, replace the "B" in listed Catalog Numbers with E (Yellow), G (Green), L (Blue), R (Red).

④ To order black lever, replace "A" in Catalog Number with "B", before 91 or 92 contact digits. Example: the Catalog Number for a maintained 1NO-1NC operator with black lever is CR104PSM21B91.

⑤ CH501 keyed cylinder lock. Other listed cylinder locks are alike and use identical keys. Dissimilar locks are also available: contact nearest GE Electrical Distribution & Control sales office.

...nces:

L... ...ptive bulletin GEA-10877
...istributor mailer GED-7021

Nameplate Selection ..... pages 7-26, 7-27
Drilling Plan and Dimensions ..... page 7-28
Extra Keys for Cylinder Lock Selector Switches ..... page 7-24

...rices and data subject to change without notice

MERCURY VAPOR SECURITY·LITE

OUTDOOR LIGHTING

SPECS FOR 175 WATT LAMP

PHOTOMETRIC DATA

PRISMATIC ACRYLIC REFRACTOR, OPEN BOTTOM, AND ALUMINUM UPPER REFLECTOR, ONE 175 WATT CLEAR MERCURY VAPOR LAMP

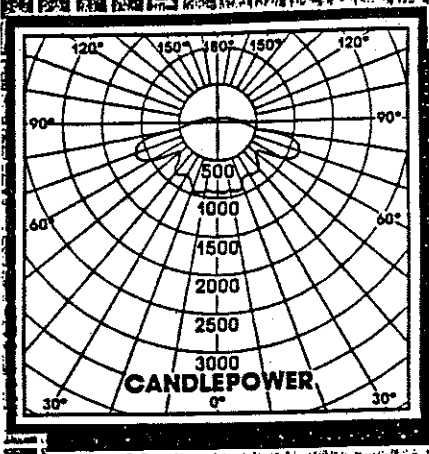

HEIGHT AND COVERAGE

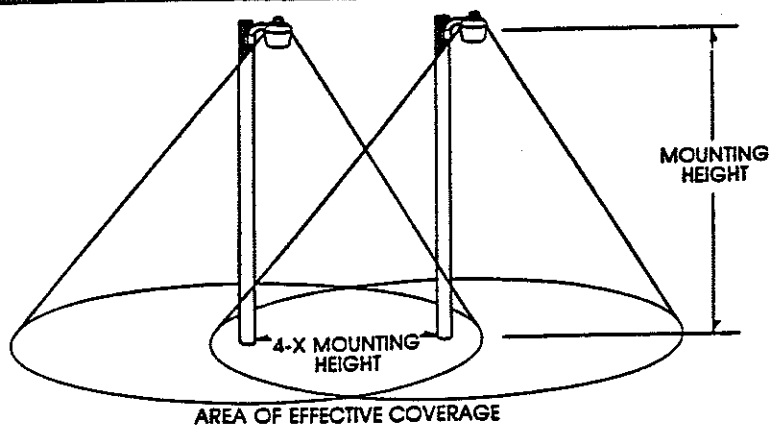

AREA OF EFFECTIVE COVERAGE CHANGES WHEN MOUNTING HEIGHT CHANGES. SEE CHART FOR SPECIFIC INFORMATION.

WATTAGE	MOUNTING HEIGHT IN FEET	AREA COVERED IN SQUARE FEET	DIAMETER OF COVERAGE IN FEET
175	15	11,300	120
	20	20,000	160
	25	31,400	200
	30	45,200	240

COMPARISON CHART

*ASSUMING 12 HOURS USAGE PER DAY AT A COST OF 10¢ PER KILOWATT HOUR

FIXTURE TYPE	LIGHT OUTPUT (LUMENS)	LAMP LIFE IN HOURS	ANNUAL OPERATING COST*
175 WATT MERCURY VAPOR	7,900	24,000	$89.79
500 WATT QUARTZ	10,500	2,000	$215.00
(TWO) 150 WATT PAR FLOOD	3,460	2,000	$131.40

PHOTO CONTROL INSTALLATION

Insert photo control in receptacle at top of fixture. Twist clockwise 1/4 of a turn to lock into place. Should the photo control rotate more than 1/4 of a turn, stop and remove the control, retighten the screw in the center of the receptacle, and repeat the installation process.

IMPORTANT: The photo control eye must be aimed away from any light source, reflected light source or any reflective surface that could cause the photo control to cycle the fixture on and off. The ideal direction is NORTH; however, this may not be possible in your particular installation.

NOTE: If your light cycles on and off because the photo control eye is detecting an undesired light or reflected light, the direction in which the eye is directed can be changed by loosening the screw in the center of the photo control receptacle.

CAUTION: Do not loosen screw more than 1-1/2 turns. After loosening screw, carefully turn receptacle in desired direction. Tighten screw and reinstall photo control. Do not rotate receptacle more than 360 degrees.

TURN ON POWER: The unit may turn on for several seconds and then turn off. This is normal and indicates that the photo control is operating properly. To further check the photo control operation, cover it to simulate darkness. The lack of daylight should cause the fixture to light within 2-5 minutes. Removal of this material should cause the fixture to extinguish.

CAUTION: Never use aluminum foil or any other conductive material to cover the photo control. All photo controls are not alike. Some will turn the fixture on and off instantly while others take 3-5 minutes. If your photo control takes 3-5 minutes, this does not mean that the photo control or the fixture is defective. You must allow 3-5 minutes for it to cycle.

TROUBLE-SHOOTING

Your fixture was tested prior to shipment and found to be operating properly. In the event that it does not operate after installation, please check to determine that:

1. The lamp is properly seated.
2. The fixture is properly connected to your power source.
3. The fixture is properly grounded.
4. The photo control is locked into place.
5. The POWER is turned on.
6. No light is being reflected into the photo control, causing the fixture to turn off.

REGENT LIGHTING CORPORATION
2611 La Vista Dr., Burlington, N.C. 27215 (919)226-2411

SECURITY·LITE™ SUPER·LITE™

INSTALLATION INSTRUCTION SHEET

READ THE ENTIRE INSTRUCTIONS CAREFULLY BEFORE PROCEEDING WITH INSTALLATION OF THIS FIXTURE.

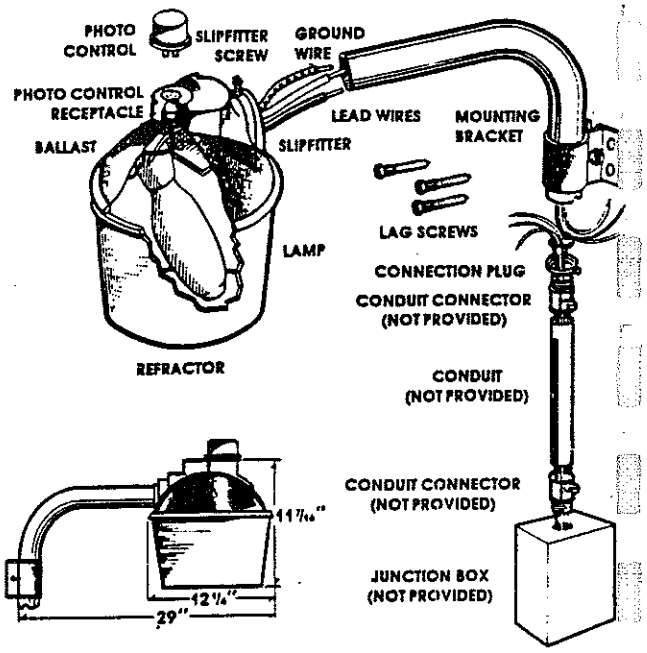

MOUNTING:

NOTE: This fixture is intended to be conduit connected to a properly installed and properly grounded weatherproof junction box (not provided). All conduit connectors, conduit and junction boxes (not provided) should be UL listed suitable for wet locations.

This fixture must be installed and wired in accordance with the National Electrical Code and Applicable Local Codes and Ordinances. Proper grounding is required to ensure personal safety. All work should be done by a qualified electrician.

1. Attach the two piece mounting brackets to the extension arm by interlocking the bracket and securing with the 1/4-20 carriage bolt and 1/4-20 hex nut provided. The mounting bracket should be secure leaving approximately one inch of the extension arm protruding out of the bottom of the bracket shown in Ill. 1.
2. Place the extension arm assembly onto the desired mounting surface and mark the four hole locations required for mounting. Remove the arm assembly and drill the four marked locations for ease of mounting.
3. Mount the extension arm assembly using the hex head lag screws provided. Tighten these screws securely before proceeding.
4. Place the fixture wires into the opening of the extension arm allowing the wires to extend through the opposite open end.
5. Place the fixture slipfitter on the end of the extension arm. Be certain the extension arm is fully seated into the slipfitter of the fixture. Tighten slipfitter screw to hold fixture in place. Do not overtighten.
6. Install first weatherproof conduit connector (not provided) into the conduit connection cap.
7. Connect black fixture lead to electrical service power lead wire and white fixture lead wire to neutral service lead wire and green fixture lead wire to service ground wire using approved connectors.
   NOTE: If your supply wires are not color coded; the white wire on the fixture should be connected to the neutral wire and the black fixture wire to the hot wire. The black and white connections should be made in a junction box or other approved wiring compartment.
   All wiring connections should be made and then concealed in the mounting arm. Install plug in the open end of the arm and secure with (2) screws provided.
8. The remaining wire should now be inserted into conduit (not provided) and the conduit secured to the connector which is installed in the connector cap.
9. The opposite end of the conduit should be terminated by the second conduit connector which is then joined to the junction box as shown in Ill. 2.

LAMP INSTALLATION

To ensure that the lamp is properly seated in the socket, you must screw the lamp securely into the socket, back the lamp out one or two turns, then screw the lamp back in, making sure it is secure.

REGENT LIGHTING CORPORATION
2611 La Vista Dr., Burlington, N.C. 27215 (919)226-2411

325-0005 Rev. A

MERCURY VAPOR SECURITY·LITE

OUTDOOR LIGHTING

MERCURY VAPOR...
"THE POPULAR ALTERNATIVE"
TO INCANDESCENT OUTDOOR LIGHTING

50 years of efficiency, durability and light quality has created the proven choice in security lighting.

MORE LIGHT FOR LESS MONEY

- Reduces operating cost by delivering more light with less energy.

LONGER LAMP LIFE

- Operates 5-7 years on normal house current.

UNLIMITED SECURITY APPLICATIONS

- Good for security perimeters, alleys, farm yards, parking lots, marinas, loading docks, residential streets, etc.

STURDY CONSTRUCTION

- Corrosion resistant cast aluminum head with 24" curved arm and mounting hardware.

APPROVED OPTICAL SYSTEM

- Complete with one piece open bottom prismatic acrylic refractor.
- Features automatic dusk to dawn NEMA twist lock photo control.

REGENT LIGHTING CORPORATION, P.O.Box 2658, Burlington, North Carolina 2/216

LIMITED WARRANTY

REGENT LIGHTING CORPORATION warrants against defects in material or workmanship for a period of one year from the date of original purchase for use, and agrees to repair or, at our option, replace a defective unit without charge for either parts or labor.

IMPORTANT: This warranty does not cover damage resulting from accident, misuse or abuse, lack of reasonable care, the affixing of any attachment not provided with the product alteration of any attachments factory installed, loss of parts or subjecting the lighting to any but the specified electrical service.

No responsibility is assumed for any special incidental or consequential damages. Damages occurring during transit are not covered by this warranty. To obtain warranty service, fill out the Warranty Service Card enclosed, and provide sales receipt as proof of purchase date and a brief explanation of the nature of the defect. (Some minor malfunctions may be corrected by a simple phone call.) If the defect cannot be corrected by phone, you will receive by mail an RGA number and full instructions for returning defective merchandise. All returned goods must be accompanied by an RGA number issued by **REGENT LIGHTING CORPORATION.**

NOTE: No other warranty, written or verbal, is authorized by **REGENT LIGHTING CORPORATION.**

This warranty gives you specific legal rights and you may also have other rights which vary from state to state. Some states do not allow the exclusion or limitation of incidental or consequential damages or limitations on how long an implied warranty lasts, so the above exclusion and limitations may not apply to you.

Mercury Vapor Lamp

WARNING: The following GOOD LAMP PRACTICES are recommended to reduce the possibility of an arc tube rupture and the associated risk of property damage or personal injury.

1. TURN LAMPS OFF AT LEAST ONCE PER WEEK FOR AT LEAST 15 MINUTES, in systems which are otherwise operating on a continuous basis (24 hours/day–7 days/week).
2. RELAMP FIXTURES AT OR BEFORE THE END OF RATED LIFE. Allowing such lamps to burn until they fail is not advised and may increase the possibility of inner arc tube rupture.
3. OPERATE LAMP WITH PROPER CIRCUITS AND AUXILIARY EQUIPMENT.

CAUTION: If a lamp bulb support is used, be sure to insulate the support electrically so as to avoid possible decomposition of the bulb glass. Do not scratch the outer bulb or subject it to pressure as this could cause the outer bulb to crack or shatter. If the outer bulb is broken or punctured turn off at once and replace the lamp to avoid possible injury from hazardous shortwave ultraviolet radiation.

Protect lamp base, socket and wiring against moisture, corrosive atmospheres and excessive heat.

Take care in handling or disposing of this lamp. A partial vacuum in the outer bulb may cause glass to fly if the envelope is struck. If the arc tube is broken, avoid skin contact with any of the contents or fragments.

NOTE: For total supply load, add auxiliary (ballast) watts to lamp watts.

LAMP	BALLAST/ANSI SPEC.	RATED AVERAGE LIFE (HRS.)	BURNING POSITION
H39KB–175	H39	24000 +	ANY
H39KC–175/DX	H39	24000 +	ANY
H39KC–175/N	H39	24000 +	ANY
H39KC–175/C	H39	24000 +	ANY
H37KB–250	H37	24000 +	ANY
H37KC–250/DX	H37	24000 +	ANY
H37KC–250/N	H37	24000 +	ANY
H37KC–250/C	H37	24000 +	ANY

PHILIPS

"WARNING: This lamp can cause serious skin burn and eye inflammation from shortwave ultraviolet radiation if outer envelope of the lamp is broken or punctured. Do not use where people will remain for more than a few minutes unless adequate shielding or other safety precautions are used. Certain lamps that will automatically extinguish when the outer envelope is broken or punctured are commercially available."

This lamp complies with DHEW radiation performance standard 21 CFR subchapter J.

Manufactured:

Philips Lighting Company
P.O. Box 6800 ■ Somerset, NJ 08875–6800
A Division of North American Philips Corporation

Made in U.S.A.

8BED28MVL-PLC 803102

PROTECTOSEAL® • INSTALLATION AND MAINTENANCE INSTRUCTIONS

MODEL 4954F

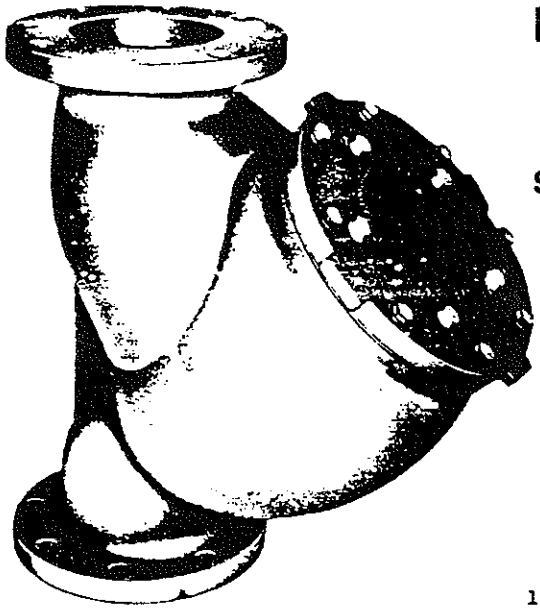

IN-LINE FLAME ARRESTER

Series 4950

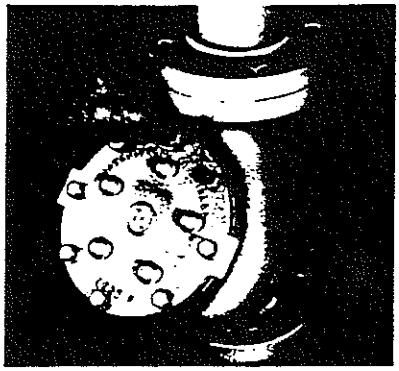

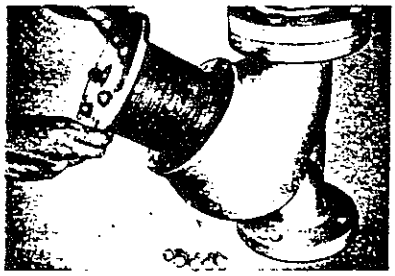

IMPORTANT - Before installation or servicing, make sure line is free of flammable or hazardous vapor.

Installation

1. Remove all protective packing from unit. Check inside body for loose packing material.
2. Make sure all cover bolts are tight.
3. Install unit. If threaded, use suitable wrench on body flats. If flanged, tighten flange bolts alternately and evenly to provide a secure seat at the gasket joints.

Maintenance

TO SERVICE FLAME ARRESTER

1. NOTE: It is not necessary to remove the flame arrester from the line for servicing.
2. NOTE: It is recommended that clean spare grid assemblies be kept on hand so that immediate replacement can be made, thus providing flame arrester protection with the least amount of interruption.
3. Remove bolts and lock washers from cover.
4. Tap cover edges lightly to loosen gasket seal and remove grid assembly from body. On larger sizes, where grid assembly is heavy, use the bar fastened to the V-groove in the cover to facilitate removal.
5. Inspect grid plates, blow out loose dirt and immerse in suitable solvent to dissolve gums and deposits. IMPORTANT! DO NOT DISASSEMBLE GRID ASSEMBLY.
6. Clean inside of body, especially the surfaces that guide grid assembly into body.
7. DO NOT USE FILE OR SHARP TOOLS for cleaning.
8. Check cover gasket. Replace if necessary.
9. Reinstall grid assembly. Tighten cover bolts alternately and evenly to provide a secure gasket joint.

THE PROTECTOSEAL COMPANY
225 Foster Ave., Bensenville, IL 60106-1690
Fax: 1-312-595-8059 Tlx: 28-2549
Ph: 1-312-595-0800

SAFETY WITHOUT COMPROMISE

THE PROTECTOSEAL COMPANY
225 Foster Ave., Bensenville, IL 60106-1690
Fax: 1-708-595-8059
Ph: 1-708-595-0800
SAFETY WITHOUT COMPROMISE

RECOMMENDED SPARE PARTS

SERIES NO. 4950 – VENT LINE FLAME ARRESTER

SERIES NO. 4950
ALUMINUM HOUSING & FLAME ARRESTER

MODEL-SIZE	4951-1"	4952F-2"	4953F-3"	4954F-4"	4956F-6"	4958F-8"	4960F-10"	49628F-12"
Grid Assy.*	4951-36R	4952-36R	4953-36R	4954-36R	4956-36R	4958-36R	4960-36R	49628F-36R
# Per Unit	1	1	1	2	1	2	3	4
Gasket	4951-18-89	4952-18-89	4953-18-89	4953-18-89	4956-18-89	4956-18-89	4956-18-89	4956-18-89
Screw	4116142410	4116183210	4116183210	4116183210	4116224810	4116224810	4116224810	4116224810
# Per Unit	6	8	8	16	8	16	24	32
Lock Washer	4285040000	4285060000	4285060000	4285060000	4285080000	4285080000	4285080000	4285080000
# Per Unit	6	8	8	16	8	16	24	32

*Grid Assembly includes gasket.

SERIES NO. C4950
DUCTILE IRON HOUSING W/STAINLESS STEEL FLAME ARRESTER

MODEL-SIZE	C4951-1"	C4952F-2"	C4953F-3"	C4954F-4"	C4956F-6"	C4958F-8"	C4960F-10"	C49628F-12"
Grid Assy.*	C4951-36R	C4952-36R	C4953-36R	C4954-36R	C4956-36R	C4958-36R	C4960-36R	C49628F-36R
# Per Unit	1	1	1	2	1	2	3	4
Gasket	4951-18-89	4952-18-89	4953-18-89	4953-18-89	4956-18-89	4956-18-89	4956-18-89	4956-18-89
Screw	4117142410	4117183210	4117183210	4117183210	4117224810	4117224810	4117225210	4117224810
# Per Unit	6	8	8	16	8	16	24	32
Lock Washer	4285040000	4285060000	4285060000	4285060000	4285080000	4285080000	4285080000	4285080000
# Per Unit	6	8	8	16	8	16	24	32

*Grid Assembly includes gasket.

SERIES NO. E4950
ALUMINUM HOUSING W/STAINLESS STEEL FLAME ARRESTER

MODEL SIZE	E4951-1"	E4952F-2"	E4953F-3"	E4954F-4"	E4956F-6"	E4958F-8"	E4960F-10"	E49628F-12"
Grid Assy.*	E4951-36R	E4952-36R	E4953-36R	E4954-36R	E4956-36R	E4958-36R	E4960-36R	E49628F-36R
# Per Unit	1	1	1	2	1	2	3	4
Gasket	4951-18-89	4952-18-89	4953-18-89	4953-18-89	4956-18-89	4956-18-89	4956-18-89	4956-18-89
Screw	4116142400	4116183210	4116183200	4116183210	4116224810	4117224810	4116225210	4116284810
# Per Unit	6	8	8	16	8	16	24	32
Lock Washer	4285040000	4285060000	4285060000	4285060000	4285080000	4285080000	4285080000	4285080000
# Per Unit	6	8	8	16	8	16	24	32

*Grid Assembly includes gasket.

SERIES NO. F4950
STAINLESS STEEL HOUSING & FLAME ARRESTER

MODEL SIZE	F4951-1"	F4952F-2"	F4953F-3"	F4954F-4"	F4956F-6"	F4958F-8"	F4960F-10"	F49628F-12"
Grid Assy.*	F4951-36R	F4952-36R	F4953-36R	F4954-36R	F4956-36R	F4958-36R	F4960-36R	F49628F-36R
# Per Unit	1	1	1	2	1	2	3	4
Gasket	4951-18-89	4952-18-89	4953-18-89	4953-18-89	4956-18-89	4956-18-89	4956-18-89	4958-18-89
Screw	4117142410	4119183210	4119183210	4119183210	4117224810	4117224810	4117224810	4117224810
# Per Unit	6	8	8	16	8	16	24	32
Lock Washer	4285040010	4287060000	4287060000	4287060000	4287080000	4287080000	4287080000	4287080000
# Per Unit	6	8	8	16	8	16	24	32

*Grid Assembly includes gasket.

PROTECTOSEAL®

SAFETY WITHOUT COMPROMISE

Series No. 4950

Vent-Line Flame Arrester

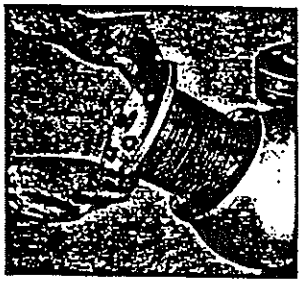

Vent-Line Flame Arrester with Circular Plate Type Flame Arrester Structure

OBJECTIVE

The Protectoseal Series No. 4950 Vent-Line Flame Arrester is designed to be installed in open vent pipes from storage or processing tanks, bleed lines or other vapor conveying lines. The arresters are used to prevent propagation of an external flame source through the vent opening and into the tank. These arresters provide maximum air-flow consistent with operating efficiency and safety.

TECHNIQUE

When properly mounted in an open vent pipe line, the 4950 Series Flame Arrester allows vapors to discharge into the atmosphere and allows air to be drawn into the pipe through the specially designed flame arrester grid assembly. In the event of a fire source outside the tank, the flame arrester provides protection for the tank's contents. The flame arresters are suitable for locations varying from twenty feet to fifty feet from the open end of the vent pipe depending upon size. The 1-inch size is approved for installation at distances up to 50 feet from the open end of the pipe. The 2-inch and larger sizes are suitable for installations up to 20 feet from the open end of the pipe. All arresters can be mounted vertically in the pipe line. The 1-inch, 2-inch, 3-inch and 6-inch sizes can also be installed in horizontal pipe lines with the grid opening in the upward position to prevent trapping of condensate.

SERIES NO. 4950

FM Approved

Listed by Underwriters' Laboratories in all materials of construction in 1" through 10" sizes.

CONSTRUCTION

Standard: Lightweight Cast Aluminum (Low Copper Alloy) housing and precision machined Aluminum flame arrester plates.

Custom: Ductile Iron housing with Stainless Steel flame arrester plates. Aluminum housing with Stainless Steel flame arrester plates. All Stainless Steel construction. Other special metals or coatings to withstand the corrosive action of some vapors and atmospheric conditions are available on request.

SPECIAL FEATURES

Easy Inspection, Installation and Maintenance. Design and light weight of entire unit permits easy, convenient handling for inspection, installation and maintenance. Arrester elements are interchangeable. This permits a clean spare arrester to be inserted for positive protection at all times. Minimizes "down time" for maintenance.

UL Listed. Listed by Underwriters' Laboratories in all materials of construction in 1-inch through 10-inch sizes inclusive.

Positive Flame Arresting. The Series No. 4950 Vent-Line Flame Arrester employs the circular-plate, precisely-spaced, type flame arrester to protect tank contents by preventing the propagation of fire into the tank. A series of sturdy, round plates are assembled on aligning bolts within the vent housing. Correct, uniform spacing between the individual plates is provided. Plates are fabricated from 1/16" to 3/32" heavy gauge metal, depending on material of construction, to resist distortion and bending during cleaning, assuring maintenance of factory inspection standards.

Numerous Sizes Available. 1-inch flame arresters have standard N.P.T. threaded connections. The 2-inch through 12-inch flame arresters mate with standard flanged A.N.S.I. connections. Use chart on reverse side for ordering.

Quality Assurance. Each unit is factory inspected prior to shipment to meet Protectoseal's high standards.

MATERIALS OF CONSTRUCTION

[illegible]	[illegible]	[illegible]
4950	Aluminum 356	Aluminum
C4950	Ductile Iron A536	316 Stainless Steel
E4950	Aluminum 356	316 Stainless Steel
F4950	316 Stainless Steel	316 Stainless Steel

Aluminum flanged to mate with 125# FF A N S I
Ductile iron and Stainless Steel flanged to mate with 150# RF A N S I

SPECIFICATIONS

Series No. 4950
Vent-Line Flame Arrester

TOP VIEW

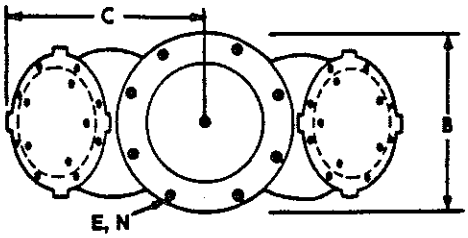

TWO FLAME
ARRESTER SECTIONS
4954F
4958F

SIDE VIEW

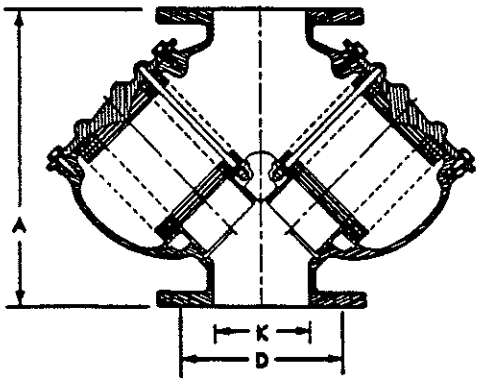

TOP VIEW

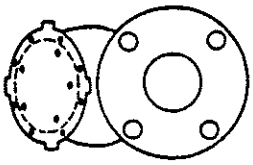

ONE FLAME
ARRESTER SECTION
4951
4952F
4953F
4956F

TOP VIEW

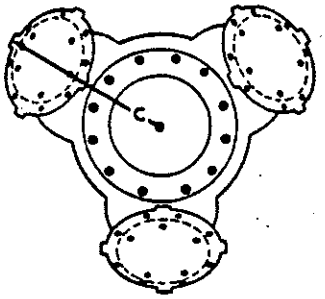

THREE FLAME
ARRESTER SECTIONS
4960F

TOP VIEW

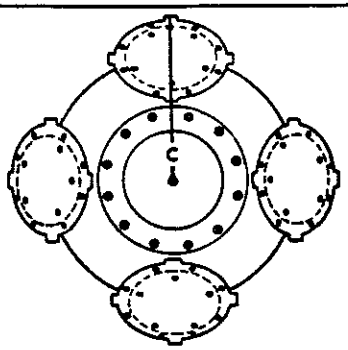

FOUR FLAME
ARRESTER SECTIONS
4962BF

SERIES NO. 4950

DIMENSIONS

	Standard Construction						
[illegible]	[illegible]	A [illegible]	E [illegible]	C [illegible]	D [illegible]	E [illegible]	N [illegible]
For Aluminum Housing with Aluminum Flame Arrester							
4951	1"	6¾"	~~6"~~	4⅞"	—	—	—
4952F	2"	10⅝"	8½"	7⅛"	4¾"	¾"	4
4953F	3"	12¾"	9½"	9⅛"	6"	¾"	4
4954F	4"	13⅜"	10"	9¼"	7½"	¾"	8
4956F	6"	21⅜"	14½"	16¼"	9½"	⅞"	8
4958F	8"	23⅝"	14½"	16⅞"	11¾"	⅞"	8
4960F	10"	24⅛"	(See C	18"	14¼"	1"	12
4962BF	12"	28"	Dim.)	18⅜"	17"	1"	12

Add prefix "C" for Ductile Iron Housing with Stainless Steel Flame Arrester Assembly.
Add prefix "E" for Aluminum Housing with Stainless Steel Flame Arrester Assembly.
Add prefix "F" for Stainless Steel Housing with Stainless Steel Flame Arrester Assembly.

Check with Sales Department for availability and scheduled delivery.

THE PROTECTOSEAL COMPANY
225 Foster Ave., Bensenville, IL 60106-1690
Phone 1 708-595-0800 Telex 28-2549

SAFETY WITHOUT COMPROMISE

1985, The Protectoseal Company

PRINTED IN U.S.A.

PROTECTOSEAL®
SAFETY WITHOUT COMPROMISE

Series No. 4950

Vent-Line Flame Arrester
Certified Air Flow Curves
PRESSURE

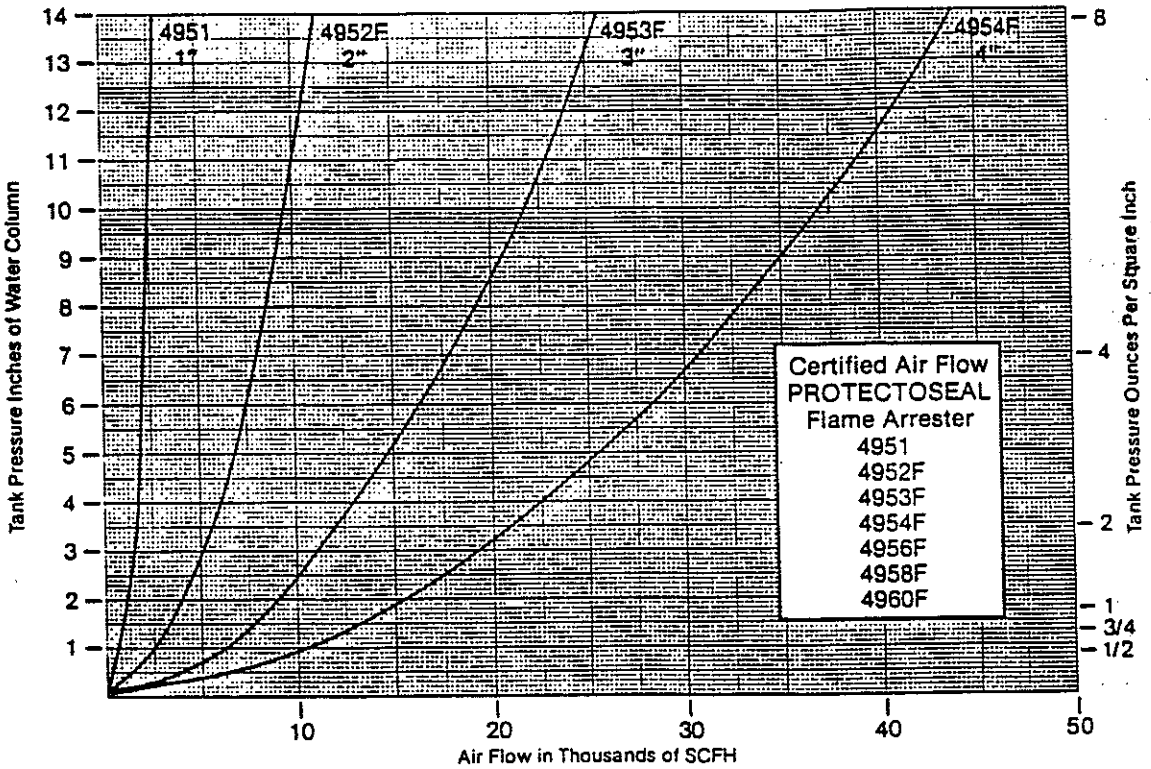

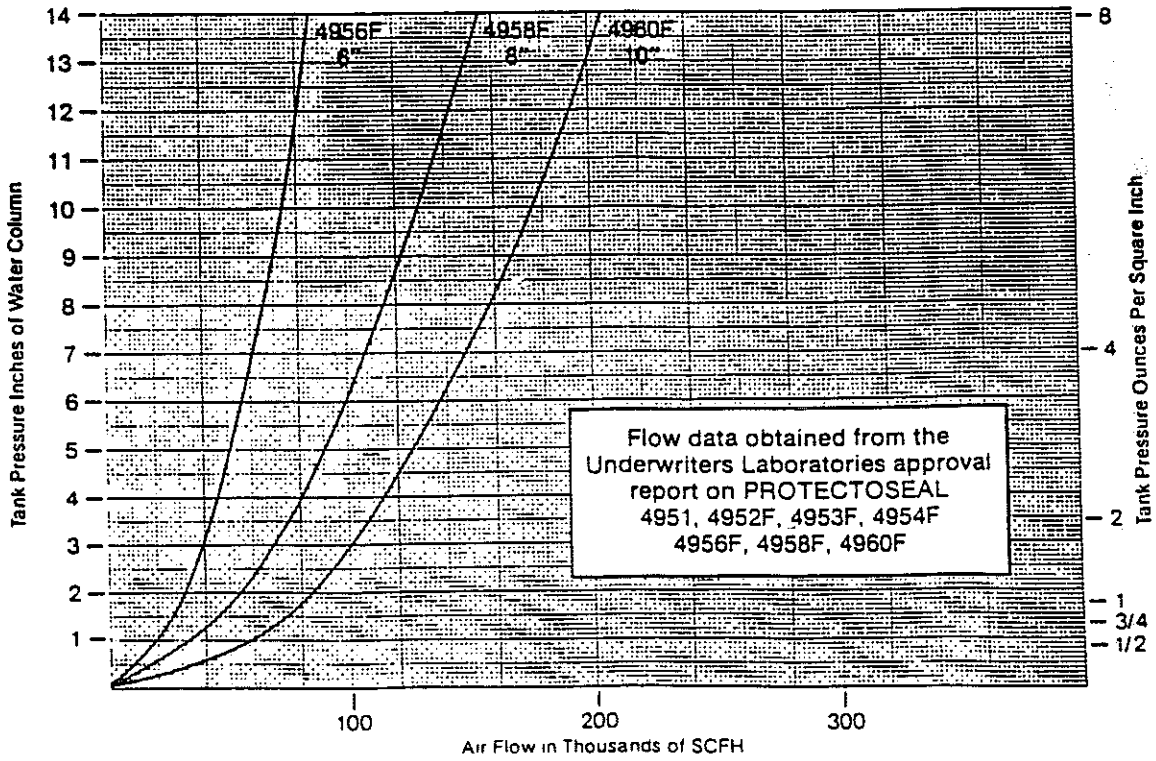

The Protectoseal Company / 225 Foster Avenue, Bensenville, IL 60106-1690 / 1-708-595-0800, Telex: 28-2549

PROTECTOSEAL®
SAFETY WITHOUT COMPROMISE

Series No. 4950

Vent-Line Flame Arrester
Certified Air Flow Curves
VACUUM

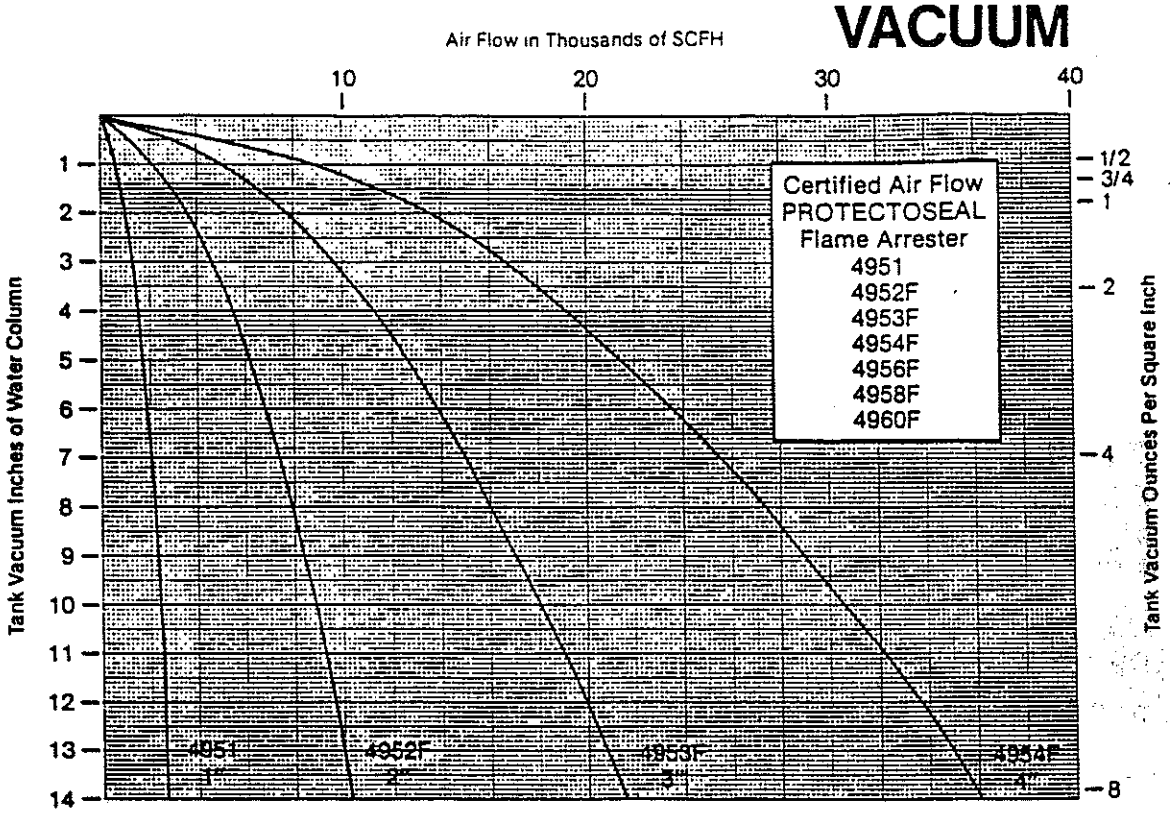

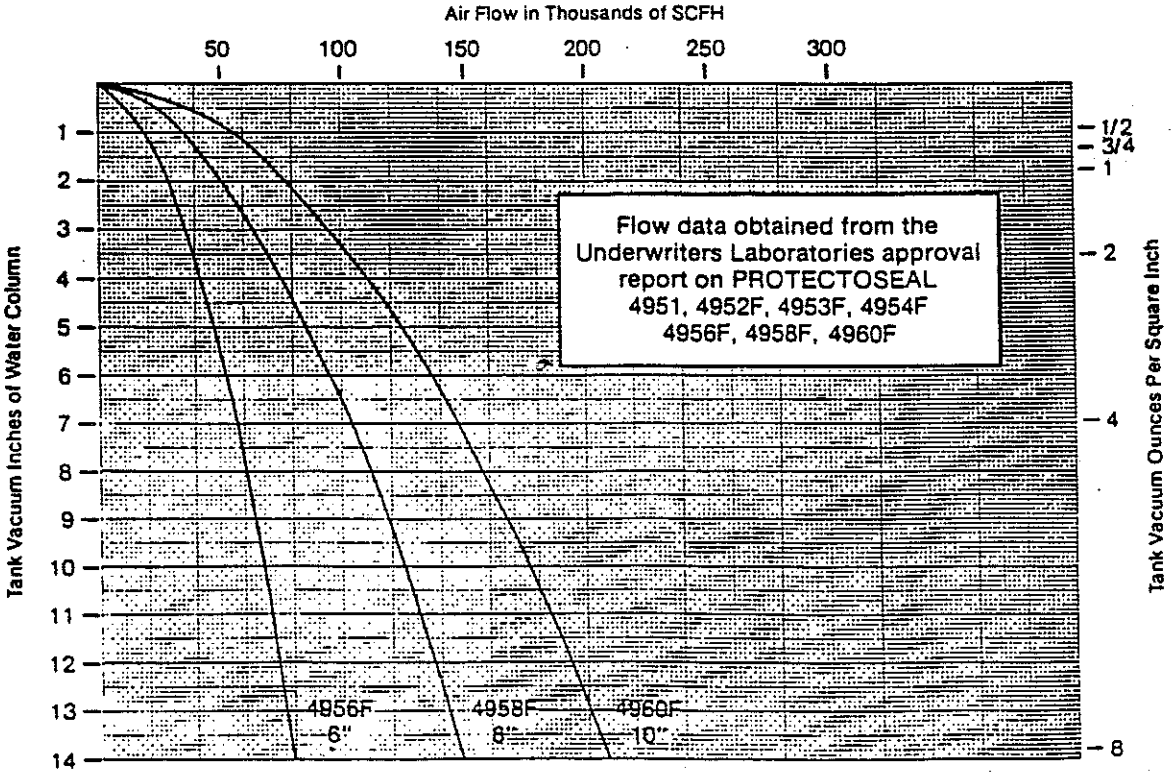

The Protectoseal Company / 225 Foster Avenue, Bensenville, IL 60106-1690 / 1-708-595-0800, Telex: 28-2549

1987 The Protectoseal Company

PRINTED IN THE U.S.A.

GRINNELL

2" - 12" Series 8000 Butterfly Valve Features

Patent No. 4,552,332 Dated 11-12-85

Pressure Rating:
- 200 PSIG WOG (non-shock)
- 150 PSIG WOG (non-shock) TFE
- 200 PSIG WOG (non-shock) dead-end service
- Full Vacuum Service

Patented design complies with MSS-SP-67 and API 609.**
Coast Guard approved to 46CFR56.20-15(b) (1).

1. ACTUATION HANDLES & ACTUATORS — A variety of handles, gear operators, and actuators are available.

2. STEMS — Stem diameters are sized for rugged service and meet AWWA C-504-80 stem diameter requirements. Two piece design for easy maintenance. Drive stem flatted for actuation.

3. STEM BUSHINGS — Upper and lower bronze bushings are standard. Teflon* bushings are available as an option.

4. STEM/DISC ATTACHMENT — Rectangular drive ensures proper stem-to-disc assembly. Disc "floats" inside the liner — ensuring positive sealing and extending seat life. No pins or bolts are exposed to flow.

5. DISC — Streamlined for maximum flow and minimum seat wear. Special coatings available.

6. BODY — Standard long neck body provides full clearance for 2 inches of insulation on ANSI 150 pipe flanges. Valve is designed to fit between 125/150 class ANSI flanges, including slip-on. All lugs are tapped.

7. LOCATING LUGS — All wafer style valves have locating lugs for ease of installation.

8. SEAT — Elastomer reinforced with phenolic backing ring enables seat to be field replaced. Grinnell's special double seal design eliminates the need for flange gaskets.

9. POSITIVE STEM RETENTION — Pin retains stem in body at all times, allowing removal of handle or actuator while under full service pressure.

10. NOTCHES IN THE NECK FLANGE — Notches identify bolt holes used to mount handles and gear operators. This feature coupled with disc drive assures correct assembly.

11. "O"-RING SEALS — Three back-up stem seal molded into seat liner to support primary seal on flat of disc.

12. UNIQUE INTEGRAL RETENTION LIP FOR DEAD END SERVICE — Lip integral to the body prevents liner from moving downstream. Eliminates seat and flange leakage. Permits full rated pressure differential when used with single flange on upstream side. (Lug Style Only)

★ Every Butterfly Valve is seat tested for bubble-tight closure.
2" - 12" sizes tested both sides at 110% of rated pressure.

* Teflon — E. I. Dupont trademark or equivalent.

** Butterfly valves can be shell tested per spec. on request.

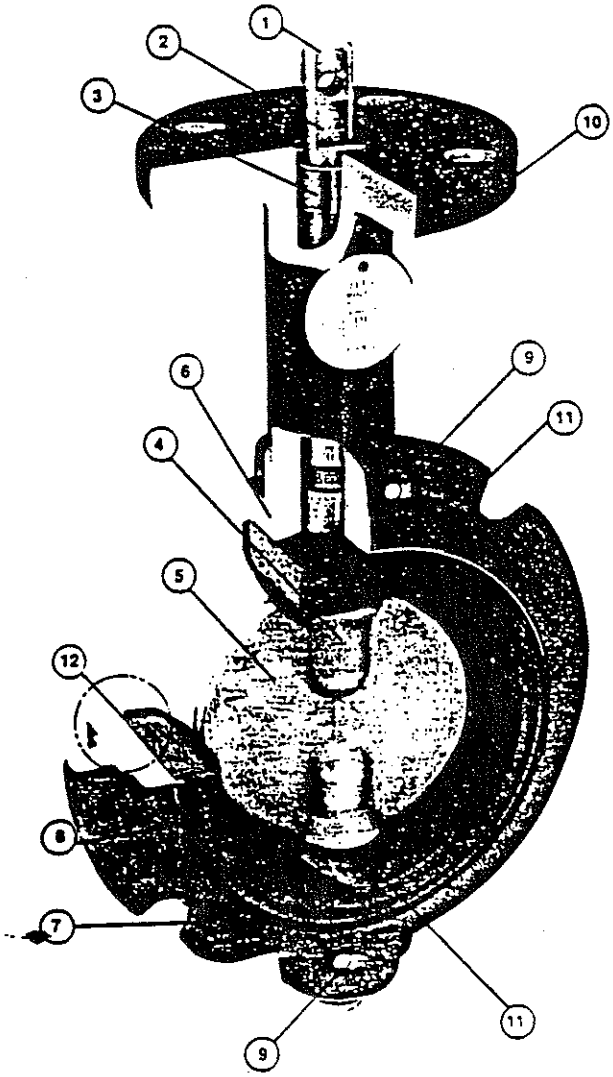

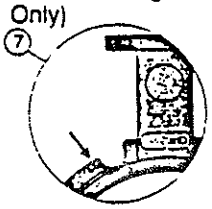

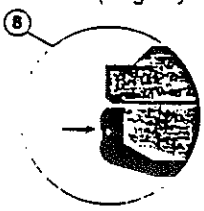

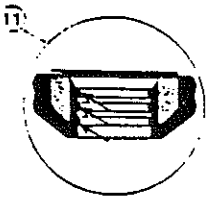

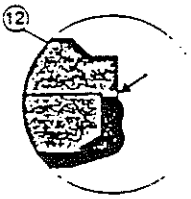

GRINNELL

How to Order: Series 8000 Butterfly Valves

ORDER BY FIGURE NUMBER

SIZE 2-24" — **8" W C — 8 2 7 2 — 3 — S**

BODY STYLE
W- Wafer
L- Lug

BODY MATERIAL
B- Bronze
C- Cast Iron
D- Ductile Iron
E- Epoxy Coated C.I.
N- Electroless NI Plated Iron
X- Special ■

SERIES
8-8000

SEAT MATERIAL
0- Teflon**
1- Buna-N
2- EPDM
3- Food-Grade Buna-N
4- White Neoprene
5- Viton*
6- Black Neoprene
7- Hypalon
8- Natural Rubber
9- Food-Grade EPDM
X- Special ■

DISC MATERIAL
0- Nickel-plated ductile iron
3- PVDF (Kynar) coated***
4- Rubber coated
7- 316 S.S.
8- Bronze (Al-Brz)
X- Special ■

OPERATOR
0- None
1- 10 Pos. L/Lock
2- Gear Operator
3- Double Acting Pneumatic
4- Electric
5- Spring Return Pneumatic
6- Square Nut (with Gear Operator)
7- Chain Wheel (with Gear Operator)
9- Infinite Lever w/memory Stop
A-10 Pos. Pushlock
B- 2 Pos. Pushlock
C- 2 Pos. L. Lock
X- Special ■

STEM
3- 416 S.S. w/bronze bushings
4- 316 S.S. w/bronze bushings
5-316 S.S. w/bronze bushing and shaft vent hole
6- 416 S.S. w/TFE bushing
7- 316 S.S. w/TFE bushing
X- Special ■

Special Configuration
(leave blank if none)
S- Sanitary
R-50 PSI disc
FP- UL/ULC listed/ FM Approved
FS- UL listed/ FM Approved One Internal Monitor Switch
FD- UL listed/ FM Approved Two Internal Monitor Switches

■ Details Required.
*Viton, an E.I. DuPont Trademark or 3-M's Fluorel will be supplied.
**Teflon, an E.I. DuPont Trademark or equivalent will be supplied.
***Kynar, a Pennwalt Corp. Trademark or equivalent will be supplied.
Note: Operator designations 3, 4 & 5, must have actuator name, number, and details.

Material Specifications

Material Specifications — ASTM References

BODY		DISC		STEM	
Material	Spec.	Material	Spec.	Material	Spec.
Cast Iron	A126 CL.B	Ductile Iron	A536, 65-45-12 A395, 60-40-18	416 S.S.	A582, Type 416
Ductile Iron	A536, 65-45-12 A395, 60-40-18	316 S.S.	A351-CF8M	316 S.S.	A276, Type 316
Aluminum Bronze	B148, C95400	Aluminum Bronze	B148: C95400		
		Cast Iron	A126 CL.B		

BUSHINGS	
Material	Spec.
Bronze	B584 C93200
Teflon	Gar-Fil *

* GAR-FIL, a Garlock Bearings Inc. Trademark.

LADCW600L2S115A

Valvcon. The logical evolution . . . . . .

With the advent of process control, valve actuation entered an entirely new era. Unfortunately, actuator manufacturers failed to respond with products designed to cope with this changing environment. Until now.

Valvcon brings you a complete line of valve actuators that not only offer efficient actuation over a variety of valve applications, but also provide the convenience and accuracy of advanced modular electronics. But we didn't simply redesign an electric actuator. We re-defined the entire valve actuation process.

Our lines of V and ADC Series Electric Valve Actuators take the next logical step in actuation technology, effectively ending the debate between electric and pneumatic methods. You now have a better choice.

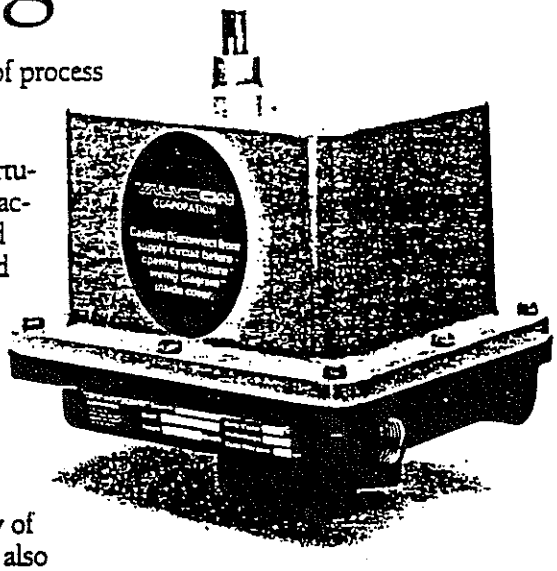

Valvcon's SV-series electric valve actuators service torque output requirements up to 1000 in./lbs.

ADVANCED ELECTRONICS, PLUG-IN MODULARITY.

The ability to wire in accessories has always been one of the major advantages of electric actuation. Hard-wiring, on the other hand, is a major disadvantage.

Valvcon V and ADC Series actuators are designed with a circuit board that readily accepts plug-in connectors. The motor, limit switches and all other specified accessories simply plug-in. Other than connecting a power source to the terminal strip on the circuit board, there's absolutely no internal wiring to tangle with— ever.

The master PC (or "mother") board and the plug-in "daughter" boards prevent miswiring and provide solid-state reliability. Installation is vastly simplified, and most additional accessories can be easily installed in as little as 90 seconds (versus the 20 minutes usually required for hard-wiring).

Gold-plated connectors assure precise, positive contact and resist internal corrosion and condensation. And the modular design allows you to select the right accessories to meet your specific application needs.

BREAK-AWAY TORQUE POWER.

When you specify a Valvcon actuator, you'll be putting a better actuator on the job. Designed for efficiency and reliability, all our models deliver the power you need when and where you need it.

Our powerful split-phase reversing AC motors, and DC motors, can produce breakaway (versus stall) torque from 150 to 3000 inch pounds. You never have to buy more actuator than you actually need. And they can be modified for multi-turn applications. The efficient spur gear drive train is supported by needle bearings which make it very secure,

while eliminating the potential for side loading of the output shaft.

ACTUATORS THAT FIT THE JOB.

Valvcon's V-Series actuators are available with either a standard duty cycle of 25%, an extended duty cycle of 75% or, in DC models, with a 100% duty cycle. A variety of plug-in accessory boards that include center-off, timer, quarter-turn modulating control, relay board and cycle rate regulator are also available.

Our break-through Fail-safe feature can be specified in ADC Series actuators, with the added benefit of operating on either AC or DC power. Valvcon Fail-safe actuators employ a daughter board with a battery pack to provide up to 10 complete cycles in the event of power loss. A recharging circuit is electronically activated to ensure that the battery pack is always fully charged.

SV- and SADC-Series actuators are smaller models, with SV-Series available from 150 to 1000 inch pounds and SADC- from 150 to 600 inch pounds. For larger valve applications, such as teflon-lined plug valves up to 3", ball valves up to 6" and butterfly valves in the 10" to 12" range, we offer LADC-models up to 2500 inch pounds and LV-models up to 3000 inch pounds.

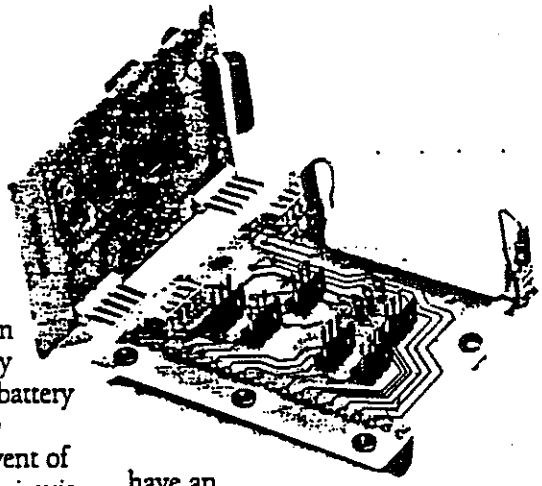

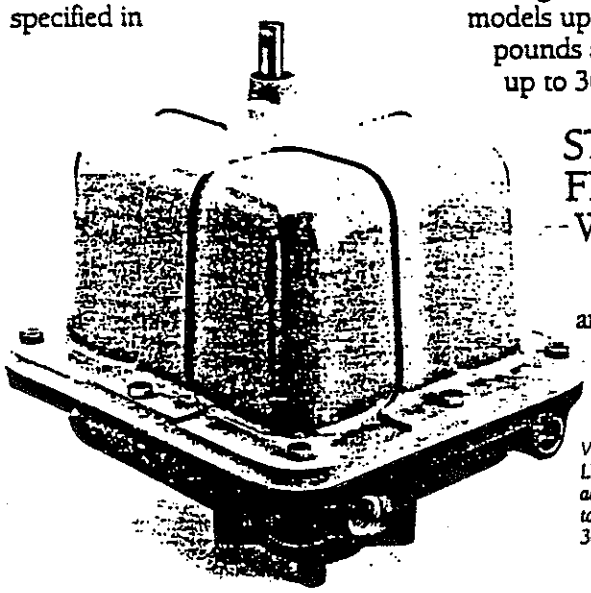

Valvcon also offers larger LV-Series electric valve actuators with increased torque output up to 3000 in./lbs.

STANDARD FEATURES/ WARRANTY.

All Valvcon V- and ADC-Series electric actuators have an ISO-inspired female drive output; V-Series actuators have a declutchable manual override. A position indicator can be located on the final output shaft for easier remote reading.

Our actuators are designed to fulfill NEMA IV or NEMA VII requirements. CSA certification is available on most models.

We also provide a full two year warranty on all mechanical components.

THE FUTURE OF VALVE ACTUATION.

At Valvcon, we specialize in the design and manufacture of electric actuators. Innovation and quality are applied to all products. For details on how Valvcon is setting new standards in valve actuation, please contact your Valvcon representive. You'll discover that our products are helping to define the future.

Technical data

VALVCON V & ADC- SERIES ELECTRIC VALVE ACTUATORS

- Voltage–*24, 115 or 230 VAC (50/60 Hz); 12 or 24 VDC.*
- Torque–*150, 300, 600,1000, 1500, 2000, 2500, 3000 in./lbs.*
- Enclosure– *Epoxy Coated Cast Aluminum*
- Duty Cycle–*Standard (25%) – Extended (75%) – ADC (100%)*
- Bolt Pattern– *ISO Standard (5211)*

"MOTHER/ DAUGHTER" BOARDS

A master PC (or "mother") board connected to the wiring strip in Valvcon actuators accepts plug-in modular (or "daughter") boards for a variety of accessory functions. The solid-state electronics provide convenient field installation as well as precise control.

ACCESSORIES

V-Series Accessories

- 1/4-turn Modulating Control†– *4-20 mA, 0-1000 ohm (and others)*
- Cycle Rate Regulator†
- Timer†–*for timed operation*
- Relay Board† *(2 or 3 wire control)*
- Center-off†–*for 180° operation*
- Mechanical Brake
- Heater and Thermostat

ADC-Series Accessories

- ADC Fail-safe Electric
- ADC Fail-safe w/Control Pkg.
- ADC Torque Switch
- ADC Multi-Turn
- Heater and Thermostat

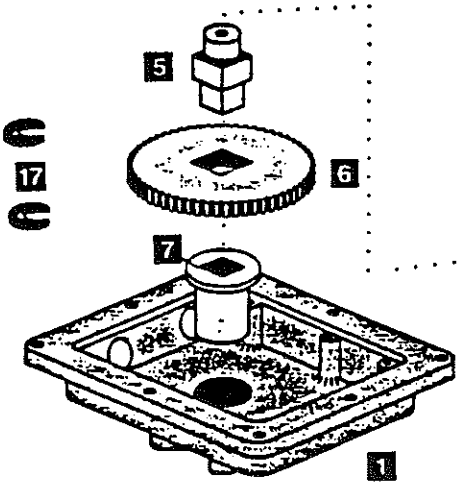

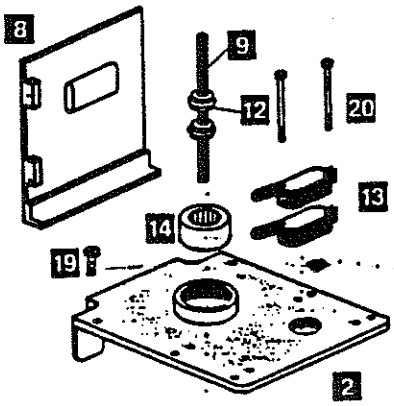

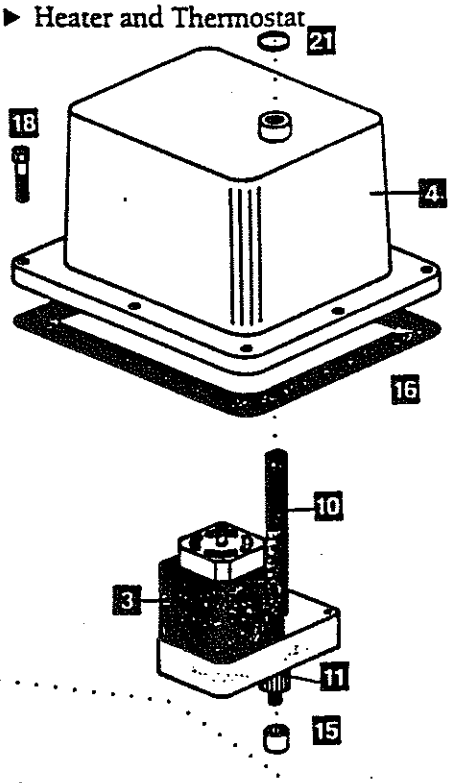

(Internal gearing shown for smaller model only.)

1 Die-cast Aluminum Base
2 Motor Support Plate
3 Motor Gearbox with hardened steel gears
4 Die-cast Aluminum Cover
5 Output Shaft
6 Hardened Steel Bull Gear
7 Output Coupling with Bushing
8 Mother Board with Capacitor
9 CAM Shaft
10 Override Shaft
11 Hardened Steel Motor Pinion Gear
12 CAM(s)
13 Limit Switch
14 Motor Support Plate Needle Bearing
15 Motor Pinion Needle Bearing
16 Gasket (Weatherproof Only)
17 Bull Gear Retaining Ring
18 Hex Screw
19 Motor Support Plate Screw
20 Limit Switch Screw
21 O-ring

† *Daughter Board*

V-SERIES

		STANDARD DUTY CYCLE (S)				EXTENDED DUTY CYCLE (E)				DC			
ACTUATOR MODEL*	BREAKAWAY TORQUE	CYCLE TIME	VOLTAGE	DUTY CYCLE	AMP* DRAW	CYCLE TIME	DUTY CYCLE	VOLTAGE	AMP* DRAW	CYCLE TIME	DUTY CYCLE	VOLTAGE	AMP* DRAW
SV150	150	5	115 VAC or 230 VAC or 24 VAC	25%	.6 @115 VAC .4 @230 VAC	10	75%	115 VAC or 230 VAC or 24 VAC	.3 @115 VAC .2 @230 VAC	5	100%	12 VDC or 24 VDC*	1.1
SV300	300	10				15				10			1.1
SV600	600	15				30				15			1.1
SV1000	1000	30				N/A			N/A	N/A			N/A
LV1000	1000	15			.8	15			.6	15			2.6
LV1500	1500	20			.8	20			.6	20			2.6
LV2000	2000	30			.8	30			.6	30			2.6
LV2500	2500	45			1.5	45			.6	35			2.6
LV3000	3000	45			1.5	45			.6	N/A			N/A

V-Series Options:
A-Timer; B-C.R.R.(Cycle Rate Regulator); C-Modulating Control Pkg.† (*4-20mA, 0-1000ohm, and others, includes pot.*); D-180° Center Off; G-4-20mA re-transmit; K-Mechanical Brake; O-Dual Conduits; P-Potentiometer; Q-Special; R-Relay Board; R2-Computer Interface Board; S-Additional Switches & Cams (*specify up to 3*); T-Heater and Thermostat

ADC-SERIES

STANDARD DUTY CYCLE (S)					
ACTUATOR MODEL*	BREAKAWAY TORQUE	CYCLE TIME	VOLTAGE	DUTY CYCLE	AMP* DRAW
SADC150	150	5	115 VAC or 230 VAC or 12 VDC or 24 VAC	100%	.2
SADC300	300	10			.2
SADC600	600	15			.2
LADC1000	1000	15			.4
LADC1500	1500	21			.4
LADC2000	2000	29			.4
LADC2500	2500	35			.4

ADC-Series Options:
C-Modulating Control Pkg.† or CL2-Fail-safe with Modulating Control‡ (*4-20mA, 0-1000ohm, 0-10VDC includes pot.*); J-Torque switch; K-Brake; L2-Fail-safe‡; N-Multi-turn; P-Potentiometer; Q-Special; S-Additional switches & cams (*specify up to 2*); T-Heater and Thermostat

Use a filtered power supply for maximum life. Cycle times are approximate only. Current draw at maximum efficiency.

V-SERIES AND ADC-SERIES:

Enclosure△: W-Designed for NEMA IV△ weatherproof requirements. X-Designed for NEMA VII° explosion proof requirements.
Temperature Limits (all models): -40°F (with heater & thermostat) to 150°F (max.).
Lubrication: Permanently lubricated gear train and bearings.
Conduit Connection: 1-1/2" NPT (2-optional)
Operation: Reversing. Limit switches, cam operated. Adjustable from 0° to 300°.
Approximate Weight: 12.5 lbs. for smaller models (SV); 25 lbs. for larger models (LV).

**Actuator model must be amplified by full "How to order" specifications including enclosure. See examples below.*
**Amps rated at full running torque. Amp draws shown are for 115 VAC only. For 230 VAC, consult factory.*
**24 VDC Cycle time and amp draw are half of 12 VDC.*
†Specify analog signal.
‡CL3 & L3 for LADC
△CSA Hazardous Location or Weatherproof certification available on selected models. Consult factory for details.
°NEMA VII Class I, Division I, Groups C and D; and Class I, Division II, Groups E, F and G.

HOW TO ORDER
VALVCON V- & ADC-SERIES ELECTRIC ACTUATORS

SERIES	ENCLOSURE	TORQUE	OPTIONS	DUTY CYCLE	POWER
SV	W	600	C	E	115VAC
LADC	X	1500	L3	S	115VAC

PRODUCT DATA

LAMSON
CORPORATION
SYRACUSE, N.Y. 13221

Centrifugal Air Systems Division

Blowers/ Exhausters

Technical Data
"400" Series

403-3-0-3850-GB

Design

Air or gas
Inlet or outlet driven (inlet standard).
Inlet connection - 5" flange, matches 125# ANSI.
Outlet connection - 5" flange, matches 125# ANSI.
Maximum casing pressure ..... 15.0 PSIG.
Seals (air) ..... labyrinth type.
Seals (gas) ..... stuffing box type standard. Special seals available.
Bearings ..... ball, life per AFBMA spec. #B-10.
Lubrication ..... grease.
Impeller diameter ..... 16" (406.4).
Vibration tolerance ..... 1.25 mils measured in vertical plane at top of bearing housings.

Direct Drive (coupling)

Number of stages ..... 1 through 10
Operating speed ..... 3500 RPM.
Impeller tip speed ..... 14,661 FPM.
First critical speed .....(8 stage)..... 4700 RPM.
Shaft diameter at coupling ..... 1.125 (28.6).

Unit Weights & Inertia Data			
Stage	Weight Machine & Base		WK²
1	590	(267.6)	
2	675	(306.2)	4.1
3	760	(344.7)	5.7
4	845	(383.3)	7.3
5	930	(421.8)	8.9
6	1015	(460.4)	10.5
7	1100	(499.0)	12.1
8	1185	(537.5)	13.7
9	1270	(576.1)	15.3
10	1355	(614.6)	16.9

Indirect Drive (V-belts and sheaves)

Number of stages ..... 3 through 8.
Operating speed ..... 4400 RPM.
Impeller tip speed ..... 18,431 FPM.
First critical speed ..... 6600 RPM.
Shaft diameter at sheave ..... 1.125 (28.6).
Center Distance ..... 60 Hz 29.1 (739.1).
Center Distance ..... 50 Hz 29.5 (749.3).

Unit Weights & Inertia Data			
Stage	Weight Machine & Base		WK²
403	780	(353.8)	5.7
404	866	(392.8)	7.3
405	950	(430.9)	8.9
406	1034	(469.0)	10.5
407	1119	(507.6)	12.1
408	1204	(546.1)	13.7

Capacities

Direct Drive — To 600 SCFM & 5.6 PSIG (peak of blower curve) or to 600 CFM & 8.5" Hg. (peak of exhauster curve).

Indirect Drive — To 750 SCFM & 8.9 PSIG (peak of blower curve) or to 750 CFM & 13.4" Hg. (peak of exhauster curve).

Materials of Construction

Casing ..... cast iron ASTM #20 inlet head, outlet head and intermediate sections.
Bearing housings ... cast iron with bronze insert.
Bearing caps ..... cast iron.
Tie rods ..... cold rolled steel.
Labyrinth seals ..... cast iron with babbitt insert.
Joint sealing compound ..... silicone rubber.
Shaft ..... high grade hot rolled shaft steel.
Impellers ..... cast aluminum alloy.
Direct drive base ..... structural steel.
Motor pedestal ..... formed steel.
Belt drive base ..... structural steel.

Miscellaneous

Finish ..... blue-green enamel.
Base pads .... molded synthetic rubber 0.5 (13) thick x variable area.
Noise level ..... In compliance with OSHA standards when machine is fully piped up (certified test available).

Notes:

1. Dimensions given in inches and (mm). Weights given in lbs. and (kg).
2. Specifications subject to change without notice.

PRODUCT DATA

LAMSON corporation
SINCE 1880
P.O. BOX 4857 SYRACUSE, NEW YORK 13221
(315)432-5500 • TELEX937215 • FAX(315)432-5451

CENTRIFUGAL AIR SYSTEMS

BLOWERS \ EXHAUSTERS

☐ For Approval ☐ Certified For

Project _____
Your Order # _____
Our Order # _____ By _____

"400" Series Air & Gas, Inlet Driven Belt Drive - Dimensions

Dimensions in Inches and (mm)

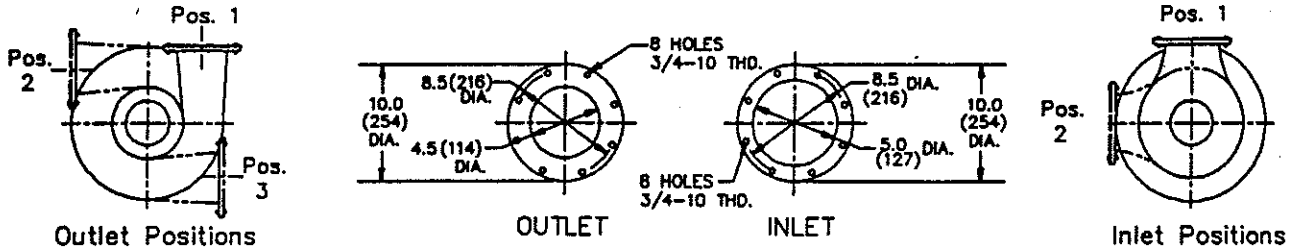

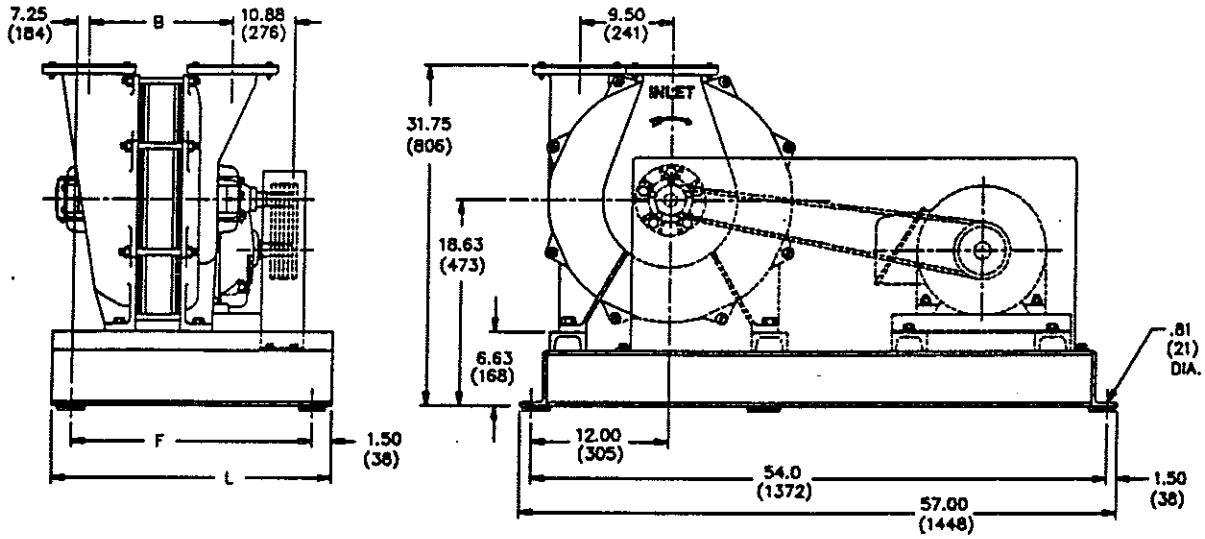

50 Hz, 3500 RPM *

Frame No.	Dimensions in Inches and (mm) B	F	L
401	6.44 (164)	34.00 (864)	37.00 (940)
402	9.88 (251)		
403	13.31 (338)		
404	16.75 (425)		
405	20.19 (513)	41.00 (1041)	44.00 (1118)

Frame No.	Dimensions in Inches and (mm) B	F	L
406	23.63 (600)	41.00 (1041)	44.00 (1118)
407	27.06 (687)	48.00 (1219)	51.00 (1295)
408	30.50 (775)		
409	33.94 (862)	55.00 (1397)	58.00 (1473)
410	37.38 (949)		

1. Flange dimensions conform to 125 pound American standard cast iron flanged fittings.
*2. 50/60 Hz, 4400 RPM, for frame no.'s 403–408.
3. Specifications subject to change without notice.

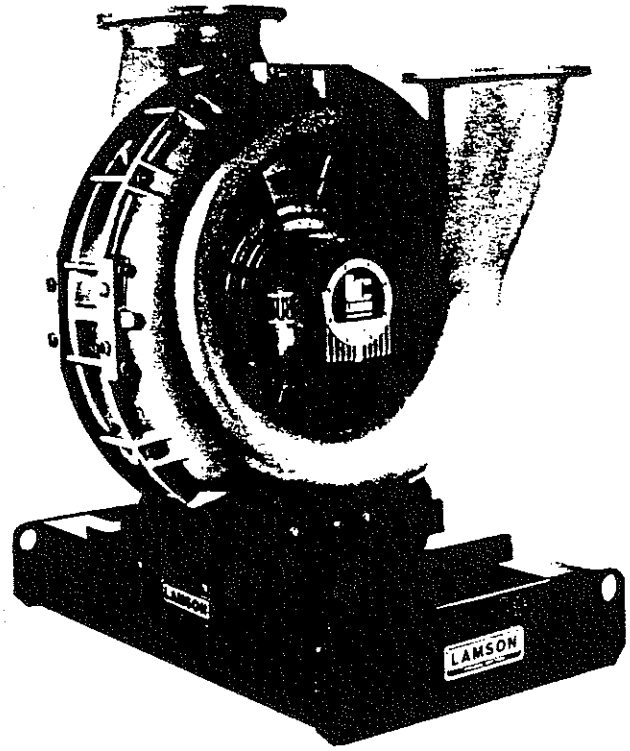

LAMSON corporation

Dynamic Innovation Since 1880

INSTALLATION, OPERATION AND MAINTENANCE INSTRUCTIONS

LAMSON corporation
Dynamic Innovation Since 1880

FULL PERF. TEST ☐

BLOWER ASSEMBLY & TEST DATA

S.O.# _____ SERIAL# _____ DATE _____

CUSTOMER _____ ADDRESS _____

☐ BLOWER ☐ EXHAUSTER CATALOG# _____ B/M _____ REV _____

☐ AIR

☐ GAS SP.GR. _____

LUBRICATION: ☐ GREASE
☐ OIL
☐ SPECIAL: _____
_____

SHAFT SEALS:
LABYRINTH ☐
STUFFING BOX ☐
C.R. SEAL ☐
C.R. DOUBLE ☐
C.R. DBL.PRG. ☐
OTHER ☐

IMPELLERS
1001 _____ OTHER _____
1002 _____ _____
1003 _____ _____
1004 _____ _____
1005 _____
1006 _____

☐ INLET DRIVEN INLET HEAD POSITION _____
☐ OUTLET DRIVEN OUTLET HEAD POSITION _____

☐ DIRECT COUPLING:
MAKE _____
TYPE _____
SIZE _____

DRIVE: ☐ BELT
BLOWER SHEAVE _____
MOTOR SHEAVE _____
BELTS _____

☐ GEAR SET
MAKE _____
MODEL _____
RATIO _____

JACK SHAFT DATA: DWG.# _____ MFR. _____

PILLOW BLOCK MAKE/TYPE: _____ SHEAVE END _____ COUPLING END _____

ACCESSORIES/MODIFICATIONS: _____

TEST MOTOR: HP. _____

JOB MOTOR: HP. _____ PH. _____ HZ _____ FRAME _____ RPM _____

MAKE _____ S/N _____ F.L.AMPS _____ VOLTS _____ SERV.FACTOR _____

P.O.# _____

☐ CUSTOMER
☐ ODP
☐ TEFC
☐ EXP.PROOF
☐ TENV
☐ OTHER _____

VIBRATION–INLET BRG. HSG.:
VERTICAL _____
HORIZ. _____

VIBRATION–OUTLET BRG. HSG.:
VERTICAL _____
HORIZ. _____

BRG. TEMP. INLET _____ °F.
BRG. TEMP. OUTLET _____ °F.

0078 REV. 11/87

INSPECTOR _____

TABLE OF CONTENTS

I. INTRODUCTION 2

II. INSPECTION 2

III. HANDLING 3

IV. STORAGE -- SHORT TERM 4

V. STORAGE -- LONG TERM 4

VI. INSTALLATION
- A. Location 4
- B. Foundation 5
- C. Positioning 5
- D. Piping 6
- E. Accessories 7

VII. ALIGNMENT
- A. Direct Drive 8
- B. Belt Drive 11

VIII. OPERATION
- A. Pre-Start-up Checks 12
- B. Operation 13
- C. System Tests 15

IX. BEARING LUBRICATION
- A. Oil Lubrication 16
- B. Grease Lubrication 18

X. MAINTENANCE 20

XI. SERVICE
- A. Bearing Removal and Replacement 21
- B. Seal Removal and Replacement 23
- C. Coupling and V-Belt Maintenance 24
- D. V-Belt Maintenance 24
- E. Carbon Ring Maintenance 24
- F. Parts for Replacement 24

XII. SMART METER
- A. Installation and Start-up 27
- B. Operation 27

XIII. TROUBLESHOOTING GUIDE 30

XIV. APPENDIX
- A. Soft Foot 36
- B. Repair Shops and Service Technicians 37
- C. Replacement Parts 38
- D. LAMSON Warranty Policy 39

Lamson's Quality Statement:

It is the policy of Lamson to achieve "TOTAL QUALITY" performance in meeting requirements of external and internal customers. "TOTAL QUALITY" performance means understanding who the customer is, what requirements are, and meeting those requirements without error, on time, every time.

I. INTRODUCTION

Congratulations! You have purchased the finest centrifugal blower manufactured. Lamson Corporation, now in its second century of operation, is a total quality managed business committed to continual improvement and customer satisfaction.

Proper installation, operation, and maintenance will assure the user years of trouble-free service.

Some Lamson centrifugal blowers are supplied with an Operation and Maintenance manual (separate from this publication) specific to a particular application or contract. That manual should be referred to for information about your particular machine's use and application.

Always refer to your specific model number and serial number which are stamped on the nameplate attached to the inlet head.

II. INSPECTION

Immediately upon receipt, thoroughly examine equipment. Both motor and blower shafts should rotate freely. There should be no evidence of damage, cracked casings, bent tie rods or any other unusual observations. Check the packing list to verify that the shipment is complete, noting receipt of miscellaneous items in crates or boxes. If any damage has occurred, or any material is missing, note on carrier's freight bill and make sure driver signs same on receiving copy. Notify delivering carrier at once and also notify your Lamson representative.

III. HANDLING

The unloading and handling of Lamson equipment is the user's responsibility, and should be performed by personnel experienced in handling heavy machinery.

The complete assembly can be lifted from beneath the steel base (Figure 1) or with lifting eyes provided (Figure 2). Slings should be located near the ends of the base as shown in Figure 1. Bare machines can be lifted at the tie rods as shown in Figure 3. Never lift with sling around shaft or flange as damage may occur to machine.

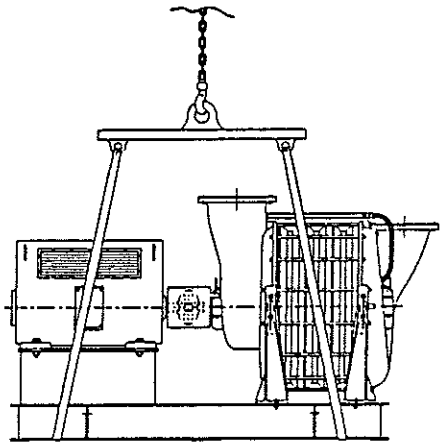

Figure 1

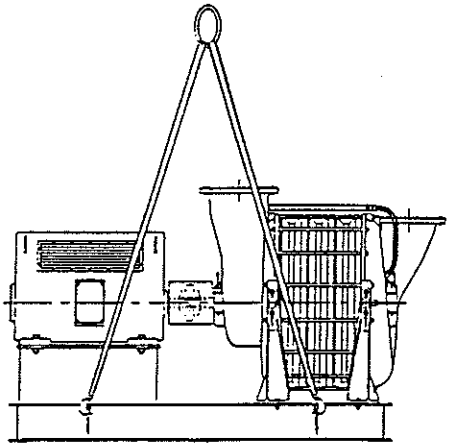

Figure 2

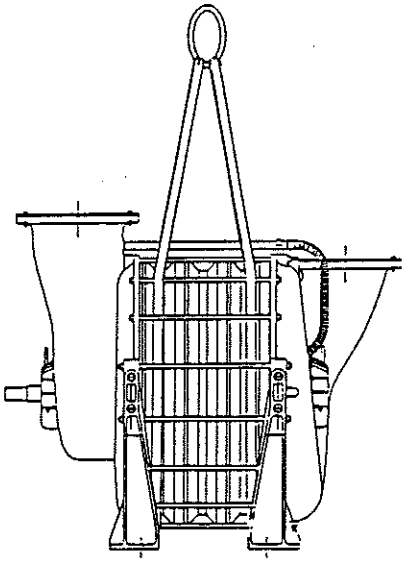

Figure 3

Eye bolts are NOT supplied with machine. If eye bolts will be used to lift the blower, Lamson recommends the use of drop forged, weldless shoulder pattern eye bolts, using full size flat washer and nut, screwed all the way down and properly seated.

CAUTION--There is no such thing as a "safe" eye bolt. Eye bolts can fail due to mishandling, improper use, alteration, excessive heat, paint or wear. Always stand clear of load when handling and lifting.

IV. STORAGE -- SHORT TERM (UP TO 90 DAYS)

Your Lamson centrifugal should be stored in a clean, dry, well ventilated area. Keep equipment covered and out of the elements. (Canvas preferred over plastic) The storage area should be heated to prevent condensation. Rotate the blower and motor shaft at least once a week to prevent bearings from taking a set and to keep lubrication evenly distributed in bearing during idle periods. Be sure to keep a log of shaft rotations to ensure machine warranty protection. You may choose to use the maintenance and service log found on page 41 of this manual to record this and any other information.

V. STORAGE -- LONG TERM

Several precautions must be observed when storing equipment for longer than 90 days:

A. ROTATE SHAFT AT LEAST ONCE A WEEK AND RECORD IN APPROPRIATE LOG. **FAILURE TO ROTATE CAN VOID YOUR WARRANTY.**
B. Suspend a bag of silica gel in the inlet and outlet heads to absorb excess moisture. Change bags periodically.
C. Coat exposed machined surfaces (ex. shaft extensions) with protective grease.
D. Cover inlet and outlet flanges with a protective lid, if required.
E. Energize motor space heater (if provided).

NOTE--All Machines are shipped with lubrication in the bearings. On oil lubricated machines, drain some oil and check for moisture or contaminants which may have entered the oil over extended storage period. If evident, drain reservoirs completely and replenish with recommended oil (see page 16).

Be sure to follow motor manufacturer's instruction to properly maintain motor during the storage period. Contact Lamson factory personnel for any special instructions regarding your particular Lamson equipment.

VI. INSTALLATION

A. Location
1. The location selected should be clean, dry, properly drained and adequately ventilated.
2. Indoor locations are preferable.
3. Plan ahead. Ample room is required for maintenance, lubrication and the removal of the machine or driver for servicing.

B. Foundation

The structural design of this unit and the smooth operation inherent in centrifugal machinery eliminates the need for massive foundations and costly site preparation. All that is required is a reinforced concrete floor or pad of sufficient strength to support the weight of the unit and assure long-term stability. Avoid mezzanines or catwalks. Also avoid hollow floors.

C. Positioning

Each unit is shipped with six (6) resilient mounting pads. Locate one under each corner of the base, and one near the center of each base side-beam. Use shims (equal or larger in size to the base pads) between the base and pads as required to level the unit (see Figure 5). Level in the lateral plane is especially important for oil-lubricated machines.

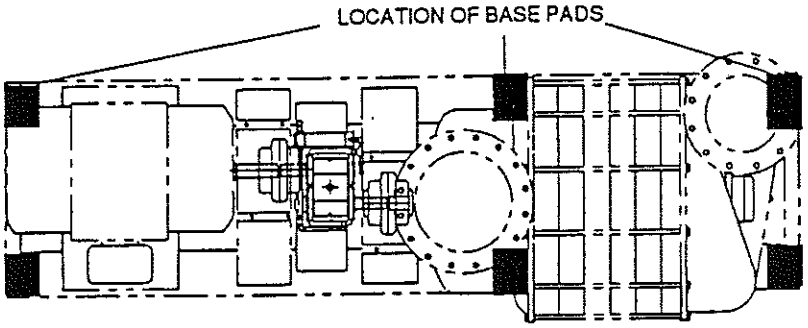

Figure 4

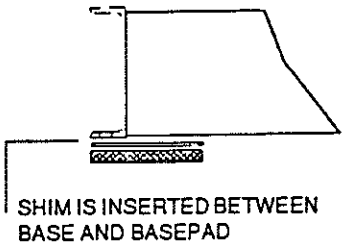

Figure 5

DO NOT BOLT DOWN!

Locating studs may be used to position the machine but should not be used to anchor the unit. Anchoring the unit (or worse yet, grouting the base in concrete) greatly increases the support stiffness, and may result in increased levels of vibration measured at the bearings. It is unnecessary, costly, and may degrade mechanical performance. **USE OF GROUTING MAY VOID WARRANTY.**

Lamson strongly discourages grouting of the unit.

If grouting must be done, follow these procedures:

1. Install the unit approximately 1" above the floor or foundation pad. Level the unit and firmly bolt the base to the foundation using spacer blocks in place of the resilient basepads. Align the motor to the blower/exhauster.
2. Non-shrinking or epoxy type grout is recommended. Follow the grout manufacturer's recommendation for foundation preparation. Typically, a rough surface with a caustic or acid etch after cleaning is suggested. Thorough wetting with water may also be recommended.
3. Build a form or dam around the base to contain the grout within the

desired area. Pour the grout inside the dam and pack in place. Do not grout too deeply over the bottom of the base, allow removal of the equipment if the need arises. If grout is not used under the center of the base, remember to provide drain paths for any water that may accumulate.

D. Piping

NOTE: Isolation sleeves must be used to isolate blower from piping system.

Expansion joints or flexible sleeves should be used on the inlet and outlet. Control, or restraining rods, are not normally recommended. If used, do not bolt up hard on both sides of the flanges as thermal movement will be restricted causing elevated vibration levels.

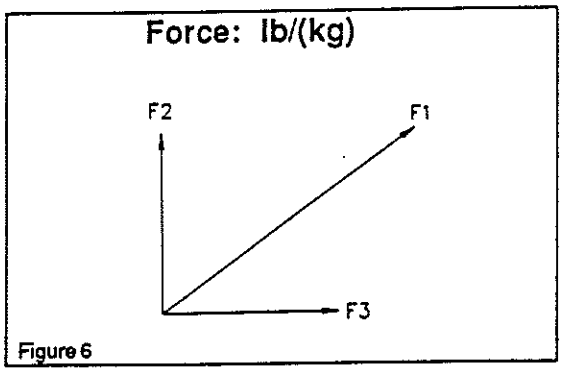

Figure 6

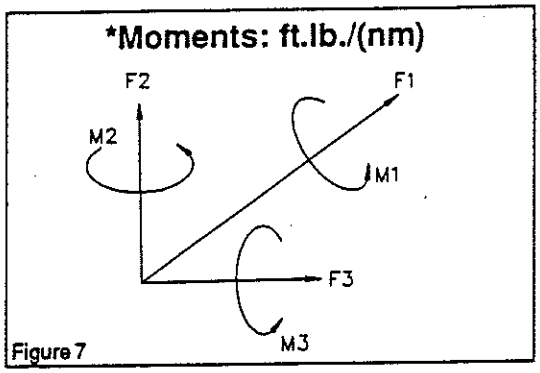

Figure 7

TABLE 1: Recommended Maximum Flange Forces and Moments

SERIES	PARALLEL TO SHAFT (F1)	INLET VERTICAL TO SHAFT (F2)	HORIZONTAL 90°TO SHAFT (F3)	PARALLEL TO SHAFT (F1)	OUTLET VERTICAL TO SHAFT (F2)	HORIZONTAL 90°TO SHAFT (F3)
410	50/(22.7)	80/(36.3)	80/(36.3)	35/(15.9)	50/(22.7)	75/(34.0)
400	100/(45.4)	150/(68.0)	150/(68.0)	80/(36.3)	80/(36.3)	120/(54.4)
510	100/(45.4)	150/(68.0)	150/(68.0)	80/(36.3)	80/(36.3)	120/(54.4)
550	100/(45.4)	150/(68.0)	150/(68.0)	80/(36.3)	80/(36.3)	120/(54.4)
600	150/(68.0)	225/(102.1)	225/(102.1)	125/(56.7)	150/(68.0)	225/(102.1)
810	100/(45.4)	220/(99.8)	220/(99.8)	150/(68.0)	170/(77.1)	220/(99.8)
850	100/(45.4)	220/(99.8)	220/(99.8)	150/(68.0)	170/(77.1)	220/(99.8)
860	100/(45.4)	220/(99.8)	220/(99.8)	150/(68.0)	170/(77.1)	220/(99.8)
1210	180/(81.6)	250/(113.4)	250/(113.4)	150/(68.0)	170/(77.1)	250/(113.4)
1250	180/(81.6)	250/(113.4)	250/(113.4)	150/(68.0)	170/(77.1)	250/(113.4)
1260	180/(81.6)	250/(113.4)	250/(113.4)	150/(68.0)	170/(77.1)	250/(113.4)
1400	250/(113.4)	350/(158.8)	350/(158.8)	210/(95.3)	250/(113.4)	350/(158.8)
1800	310/(141)	900/(408)	450/(204)	370/(168)	450/(204)	530/(240)
2000	310/(141)	900/(408)	450/(204)	370/(168)	450/(204)	530/(240)
*Moments						
1800	1250/(1695)	575/(780)	1250/(1695)	1250/(1695)	575/(780)	1250/(1695)
2000	1250/(1695)	575/(780)	1250/(1695)	1250/(1695)	575/(780)	1250/(1695)

If piping expansion joint control rods are considered, consult factory. Do not allow machine flanges to carry substantial unsupported weight. All piping must be properly supported. Factory recommended piping loads must not exceed the values shown on previous page.

E. Accessories

1. Butterfly or throttle valve.
   Lamson recommends throttling your centrifugal on the inlet side of the machine to maximize the efficiency of the unit/motor.

Carefully remove shipping flange covers prior to assembling accessories. Make sure no foreign materials enter the unit. When mounting the butterfly valve on the inlet, the valve should be positioned such that the valve shaft is at a right angle to the blower shaft and opens away from the body of the blower to allow smooth air entry to the blower. The rush of air should never be directed toward the first stage impeller.

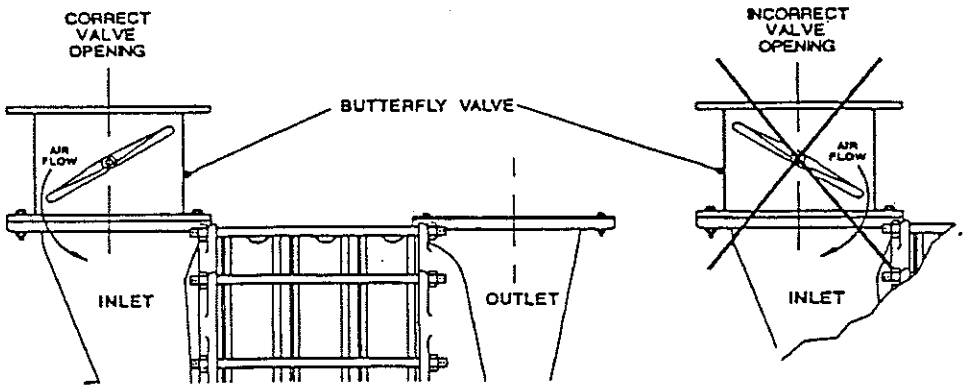

Figure 8

Always start blower with inlet valve closed. Open slowly after machine comes up to speed.

2. Check Valves
   Check valves must be installed in the discharge piping to prevent reverse air flow to other blowers in the piping system. The check valve must be located downstream of any blow off lines.

   If EXHAUSTERS are operated in parallel, a check valve should be installed in the inlet piping of each machine and must be upstream of any bleed in system.

3. Inlet Filter (Blowers)
   Lamson recommends the use of an inlet filter to keep foreign material from entering machine. Abrasive, wet, or bulky material will damage the machine's internal parts and could cause catastrophic failure. Consult Lamson for recommendations on inlet filter types and sizing. Refer to Table 1 on previous page for weight restrictions on inlet flange.

It is extremely important to keep inlet filters clean. Dirty or plugged filters will cause a low flow or surge condition which will result in substantial damage to your machine. Units damaged from running in surge are NOT covered under warranty.

4. Bleed Air or Surge Control Systems
   Lamson strongly recommends use of bleed air surge control systems. A bleed air system is an electrically operated current sensing valve that will prevent surge. Consult Lamson factory for details.

5. Drivers
   Electric - read and comply with motor manufacturer's installation and operation instructions which are attached to the motor. Make certain that motor nameplate requirements agree with available power supply at job site. All wiring **MUST** be done by a licensed electrician in accordance with National Electric Code and all local regulations.

   Turbine, diesel, gasoline, natural gas drivers: Read and follow manufacturer's Installation and operation manual supplied with driver.

VII. ALIGNMENT

The following procedure is applicable to direct driven machines. For belt driven alignment, see Section VII B on page 11.

A. Direct Drive
   Correct shaft alignment ensures long life and trouble-free service for your Lamson centrifugal. Misalignment is one of the most common causes of machine vibration and premature bearing failure. Proper alignment means establishing, as near as possible, a common axis of rotation for both driver and driven shaft. **Final shaft alignment is the responsibility of the installer/owner.**
   1. All Lamson centrifugals, whether direct or belt driven, are cold aligned at the factory for mechanical testing purposes.
   2. It is the nature of all centrifugals to grow thermally during operation due to the heat generated by compression and air/gas movement through the machine. This thermal growth causes misalignment from the original factory set "cold" condition.

Alignment corrections must be made with the machine at operating conditions.

Centrifugal rotating equipment must have time to stabilize. This is the period of time required for the machine to reach operating conditions and temperature. This can take up to 1 - 2 hours. During this time, it is not unusual to experience higher than normal vibration levels while the machine is settling in and stabilizing. Therefore, it may be necessary to disable vibration sensors during this period to avoid premature shutdown.

Alignment can be achieved using several methods. Laser alignment is the most accurate and quickest method of shaft alignment. Lamson technicians are specially trained to provide laser alignment services - consult factory.

-Acceptable, but not as accurate as laser alignment, the reverse dial indicator method is commonly used to achieve alignment. The reverse indicator method involves use of two brackets measuring directly off the shafts.

Figure 9

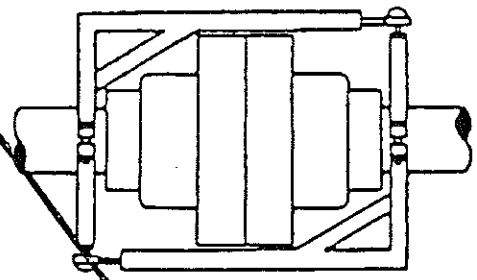

-Single dial indicator method - used to measure parallel and angular misalignment. An alternate method is by use of a single dial indicator to measure both parallel and angular misalignment.

Figure 10

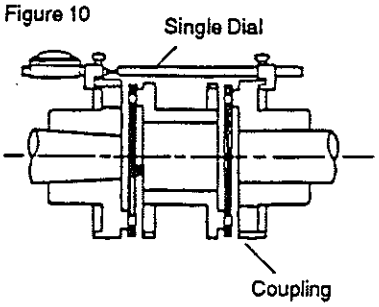

Coupling in Alignment

Figure 11

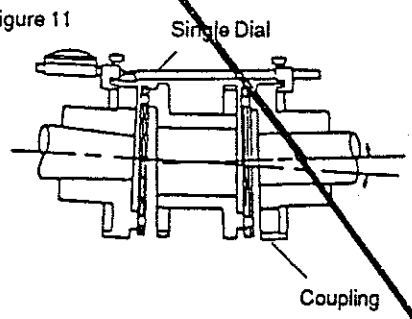

Angular Misalignment

Figure 12

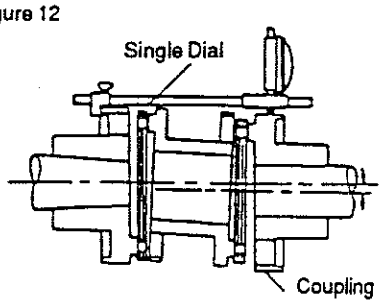

Parallel Misalignment

-Caliper and straight edge method - is simple and effective if done correctly but cannot achieve desired tolerance.

Figure 13

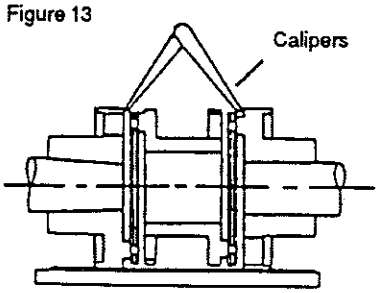

Coupling in Alignment

Figure 14

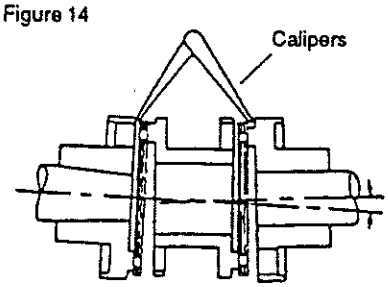

Angular Misalignment

Figure 15

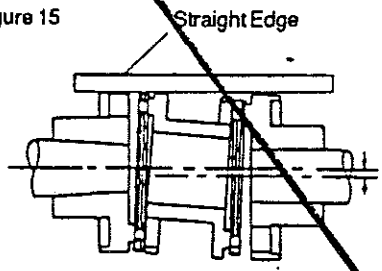

Parallel Misalignment

After stabilization (when temperature rise has ceased) final alignment corrections should be made.

Lamson recommended alignment tolerance is +/- .002 inches (.0508mm) parallel and 1/4° angular.

The following conditions can affect alignment and can be a factor in trying to achieve good alignment:

a. Base and foundation must be level and smooth.
b. Piping must be isolated using flexible sleeves or expansion joints.
c. Pay particular care to outlet driven machines with horizontal discharge heads as thermal expansion can be multi-directional.
d. Machine structural base should be mounted on resilient vibration pads, as supplied, and should not be hard grouted (see section VI-C). Do not bolt down hard.
e. Check for soft foot. All driver (motor) support feet must be in the same plane. When one or more feet are higher than the others, a "soft foot" condition (table-leg effect) exists that must be corrected to allow for a more exact alignment.

To check for soft foot:
With all motor hold down bolts tight, set dial indicator at tip surface of foot and zero it. Loosen that foot noting the indicator movement. Re-tighten that foot. Perform same procedure on the adjacent foot. Add shims to the foot showing the highest reading. When the reading is brought to a value of less than .003 in (0.076mm), check the foot which was checked first to ascertain that a new soft foot has not been created. An acceptable reading is less than .003 in (.0076mm). For more common causes of soft foot, see Appendix A.

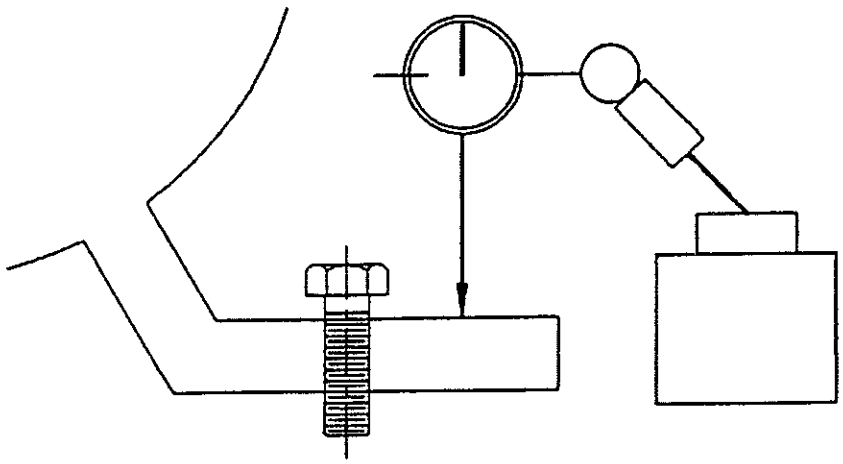

Figure 16

Good alignment is critical to long bearing life. Lack of vibration at start up does not necessarily indicate good alignment.

IMPORTANT: Always lockout starter or motor control center when working on or near any rotating equipment.

B. Belt Drive Alignment

Prior to alignment of belt drive systems, inspect piping system and installation to be sure it is in accordance with Lamson recommended specifications. Sheaves and belts must be clean and dry. Do not apply belt dressing.

Alignment is checked by placing a straight edge across the faces of both sheaves. If properly aligned (Figure 17), the straight edge will contact both sheave faces squarely. Incorrect alignment (Figures 18 & 19), can be adjusted by moving the motor into proper position.

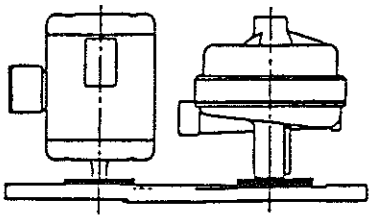

Figure 17
Proper Alignment

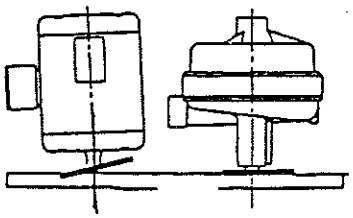

Figure 18
Angular

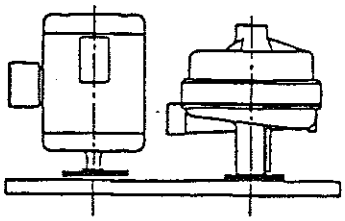

Figure 19
Parallel

Proper belt tension is important to ensure maximum belt and bearing life. Follow the instructions supplied with the tensionmeter to determine the proper belt tension. Belts may stretch slightly when first placed into service. Therefore, re-check belt tension after the machine has operated a few hours.

When replacing V-belts, always replace with same type, manufacturer, and matching belts. Never mix new and used belts on a drive. Replace all belts with a matched set. Never force belts over the sheave. Remove tension from belts when out of service for lengthy periods.

Belt tension

1. The best tension for a V-belt drive is the lowest tension at which the belts will not slip under the highest load condition.
2. Check the tension frequently during the first day of operation.
3. Check the tension periodically thereafter.
4. Too much tension shortens belt and bearing life.
5. Keep belts and sheaves free of any foreign material which may cause slip.
6. If a belt slips, tighten it.

NOTE: It is normal to hear "clacking" of the check valve during coastdown.

-In the event of an electrical malfunction, during an emergency shutdown, de-energizing the control panel is recommended.

2. **Operating Temperatures**
   It is the nature of centrifugal compressors to run hot due to heat of compression and internal friction caused by movement of air. The higher temperatures will be on the discharge side of the machine.

   The following information will serve as a guide in determining acceptable temperature limitations under normal operating conditions. For specific applications, or operating temperatures outside of the figures shown, contact the factory.

3. **Bearing Temperatures**
   Bearings used in your Lamson centrifugal are designed to operate continuously in temperatures in excess of 200°F (93°C), measured on the bearing housing. Standard alarm circuitry, if supplied, is set to alarm at 230°F (110°C). If bearing temperature monitors are not supplied, check bearing housing temperatures, periodically, and notify Lamson service if readings exceed 220°F (104°C).

4. **Discharge Air Temperature**
   Under normal operating conditions, using ambient or atmospheric air, typical discharge air temperatures will also exceed 200°F (93°C) measured in the discharge air stream or on the surface of the discharge (outlet) head. Use only discharge pipe rated for high temperature (300°F).

   Discharge temperature is affected by many factors including efficiency, flow, pressure, altitude, etc. so it is difficult to determine the exact discharge temperature you can expect.

   Generally speaking, Lamson discharge air temperatures should not exceed 275°F (135°C) under normal operating conditions.

   In all cases where other than ambient or atmospheric air is being compressed, or discharge temperatures reach 275°F (135°C), consult Lamson factory. Failure to do so could nullify factory warranty.

A NOTE ON NOISE...
Every effort has been made to keep the noise level of operating equipment below 85DBa, the current acceptable limit mandated by OSHA. Although hearing protection is not required by law, the manufacturer suggests the use of hearing protection when operating this equipment.

CAUTION: If your Lamson centrifugal is being used in a hot application such as steam re-compression, or similar application where inlet temperatures exceed 200 °F (93.3°C), the machine must be preheated slowly to 180 °F (82.2°C) minimum, prior to introduction of hot process air, gas or vapor. Sudden introduction of above without preheating can cause serious damage to the machine and will void the factory warranty.

C. System Test

1. **Surge Control Test**
   - Bring machine up to operating speed.
   - Set trip point slightly above surge point on meter face. Different types of motors require different set up procedures, consult factory for specifications.

Surge is defined as the "unstable" flow of air through a machine. It can only be caused by a lack of air into, or a restriction of air out of, a blower or exhauster. Surge is harmful to Lamson machines because the heat of compression within the blower is not allowed to be carried off, resulting in the aluminum impellers expanding to touch the inside walls of the cast iron housing. The heavy pulsating action of a unit in surge will inevitably cause the bearings and machine to fail. In some cases where heavy surge is experienced, a centrifugal machine can fail within a matter of minutes. See page 35 for more on surge.

2. **Amperage Test**
   - Meter must be checked for correct amperage reading. Compare actual amperage draw of the motor with that registered on the meter.
   - With machine in full operation, use a "clamp-on" ammeter to measure actual amperage draw at motor, or motor starter. This amount should be reasonably close to that registered on the meter (within 5%).
   - If not, check to see that ratio stamped on current transformer matches that imprinted on the back of the meter, or check for the correct number of turns through the current transformer.

3. **Overload Protection Test**
   - On units with motor overload protection, a high AMPS trip point also is on the meter face. This adjustment varies with the type of meter used, consult factory for details.
   - With machine in full operation, adjust the meter, decreasing the set point until it crosses the meter reading. The overload alarm will sound and/or shutdown will occur.
   - Be sure all horns, lights, etc., respond properly to the overload condition.

4. **Bearing Temperature Monitors**
   - All Lamson Thermal-Guard systems are calibrated and preset at the factory to trip at approximately 230°F (110°C). This high limit bearing temperature set point is sufficient for all Lamson equipment and must not be adjusted.
   - To ensure accurate temperature detection, the temperature probe "bulb" should be immersed in a grease medium within the thermowell attached to the bearing housing.

a "full" mark etched horizontally. Regardless of the oil level in the glass reservoir, the sight glass full mark is the indication of the correct oil level. The Oil-Rite Oilers are factory preset; no field setting is needed.

CAUTION: For Oil-Rite Oiler, the vent hose must be connected between the oiler base and the top of the machine bearing housing.

To add oil to the bearing housing, remove the screw cap attached to the top of the Oil-Rite Oiler. Fill bottle with oil. Replace screw top until it is snug against the top of the oiler. This will permit the oil to flow into the bearing housing. A bubbling action will take place as long as the bearing requires oil. Repeat the filling of the Oil-Rite Oiler bottle until this bubbling action stops. When the bubbles stop, it is an indication that the bearing housing has the proper amount of oil.

FILLING INSTRUCTIONS

TRICO OILER

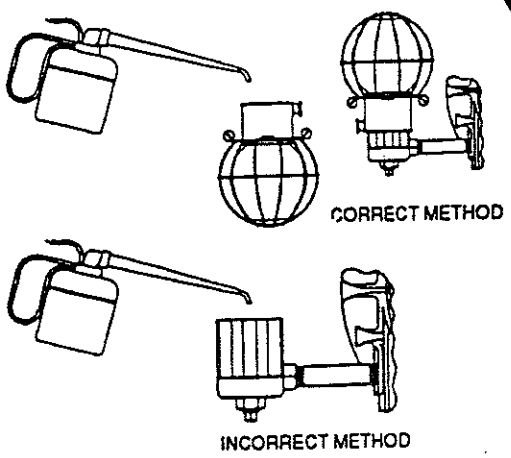

Figure 21

OIL-RITE OILER

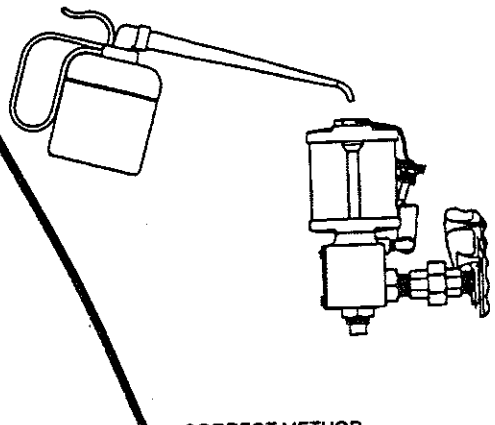

Figure 22

Add oil as often as needed. Once every year of normal operation, drain oil completely and refill with clean fresh oil. During the re-lubrication process, it is of critical importance to protect both the lubricant and the bearing from contamination by dust, dirt or any foreign materials. Each oil reservoir has a magnetic drain plug. Check plug periodically for any material that may be present. If metal shavings or particles are observed, consult factory.

B. Grease Lubrication

The greatest cause of bearing failure is over greasing rather than under greasing. For this reason, Lamson does not recommend use of permanently installed grease fittings as they invite over greasing.

A special high speed grease, Lamson #5, is required in Lamson grease-lubricated machines. Use of any other type of grease without explicit approval of Lamson Service Department will automatically **VOID THE MACHINERY WARRANTY.** Lamson #5 grease may be purchased from the supplier of the blower/exhauster or direct from Lamson Corporation in Syracuse, NY.

LAMSON #5 GREASE SPECIFICATIONS

NGLI GRADE	NO. 2
THICKENER TYPE	POLYUREA
THICKENER %	9.5
OIL	MINERAL OIL
VISCOSITY	0 CST @ 40° CELCIUS
VISCOSITY INDEX	90
DROPPING POINT (ASTM D2265)	470° F (243.3OC)
ADDITIVES	OXIDATION & RUST INHIBITORS
TEMPERATURE RANGE	22OF(-5.5OC)TO 347°(175Oc)FAHRENHEIT
TEXTURE	SMOOTH, BUTTERY
COLOR	BLUE-GREEN

Prior to shipment, blower/exhauster bearings are adequately lubricated for 1500 hours of operation under normal operating conditions. If three months or more have elapsed since shipment from the Lamson factory, remove bearing housing covers and inspect for moisture due to condensation.

To add grease during operation:

1. Remove plugs from top and bottom of bearing housings (see diagram on page 25).
2. Bring blower/exhauster up to a stabilized operating temperature.
3. Add grease through the top opening in the specified amount (see diagram on page 25).
4. Reinsert plug in top opening.
5. After thirty minutes wipe off expelled grease and reinstall bottom plug.

Lamson also offers electronic auto-lubricators that take the worry out of lube cycles. Consult factory for more information.

Alternate Greasing Procedures: Recommended every two years of normal operation or six months of abnormal operating conditions such as high speed operation (v-belt) dirty environment, high pressure and temperature (Turbotron).

1. With the machine fully stopped, remove bearing cover and plugs.
2. Remove all old grease from bearings, housing and cover by flushing with a clean solvent.

3. Re-pack face of bearing by hand and add remainder of specified amount to bottom half of bearing cover.
4. Re-install plugs and bearing cover and start unit.

TABLE 3: Grease Quantities

Series	Full Replacement	Periodic Addition
~~240~~, 400	1.6 oz.(45g)	1 oz.(28g)
~~510, 550~~	~~3.1 oz.(87g)~~	~~2 oz.(56g)~~
600	5.5 oz.(154g)	3 oz.(84g)
810, 850	~~5.5 oz.(154g)~~	3 oz.(84g)
1210, 1250	5.5 oz.(154g)	3 oz.(84g)
860, 1260	7.0 oz.(196g)	~~4 oz.(112g)~~

X. MAINTENANCE

Lamson offers a full range of factory technician maintenance programs at very competitive prices. Consult Lamson Service for details and warranty extension programs.

Some simple maintenance procedures will help prolong the life of your Lamson blower:

A. Periodically inspect foundation and correct if deficiencies are found. Check for level condition and correct as necessary.
B. Check condition of isolation pads and replace as necessary.
C. Make sure lubrication maintenance schedule is established and adhered to.
D. Periodically check all valves in system. A stuck or broken valve can cause severe damage to equipment.
E. Alignment should be checked and corrected twice yearly.
F. Check pipe supports and adjust if necessary.
G. Keep equipment clean. If machine is oil lubricated, be sure to keep oiler bottle clean so oil, or lack of, can be seen. Keep oil breather cleaned to prevent leaks.
H. Follow motor manufacturer's recommendations for motor maintenance.
I. Vibration readings and bearing temperature readings should be taken periodically to monitor the condition of the machine bearings which are the most critical component in your machine. If equipment to do this is not available, consult Lamson Service.

XI. SERVICE

There are some service functions that can be easily performed on your Lamson centrifugal blower. These include bearing changes, seal changes, coupling service and some other external type repairs.

Major repairs usually require dismantling of the machine. This should only be performed by a Lamson Factory Service Technician. In all cases, you should contact Lamson Service in Syracuse, New York, Phone 315-433-5500.

Failure to notify Lamson prior to working on your centrifugal for any reason within the warranty period can void the factory warranty.

A. Bearing removal and replacement

This section applies to inlet and outlet, motor or belt driven machines for air or gas service.

On all Lamson centrifugals, the inlet bearing is the fixed bearing. If changing both bearings, always change inlet bearing first. When complete, then change outlet bearing.

1. Drive end bearing:

a. If a direct driven machine, remove motor (or in case of spacer-type couplings you need only remove spacer). Next, remove the coupling hub by loosening set screws and applying heat to hub. *NOTE: Do not apply excessive heat.* The hub needs only 40-50° F temperature differential over ambient for normal removal. For hubs that are press fit (special applications only) more heat will be required. Use standard puller to remove hub. Do not try to pry or hammer off.

b. If belt driven machine, remove sheave.

c. If gas machine, grease lubricated, your centrifugal will have a packing gland at the drive end. Remove packing gland, packing, and packing housing.

NOTE: Some gas tight machines, regardless of lubrication, have purged shaft seals. The purge connections will be visible through the openings in the bearing housing. These connections should be removed at this time.

d. If oil lubricated;

1. Remove drain plug in bottom of housing and drain oil. Remove oiler bottle assembly. If Trico Oiler, remove leveling cross arm assembly in bottom of oiler cup.
2. Remove oil reservoir cap, gasket, bearing locknut, bearing lockwasher, oil slinger, and spacer if present.

e. If grease lubricated;

1. Remove bearing cap and gasket.
2. Remove bearing locknut and lockwasher.

f. Bearing housing and bearing are now ready for removal.

At this time loosen the bolts that fasten the labyrinth or carbon ring seal to the head. This is necessary to prevent damage to the seals since the shaft will drop somewhat when the bearing is removed.

When removing bearing and housing, pay careful attention to procedure. All Lamson centrifugals have inlet (suction) side bearing as fixed bearing. Outlet (discharge) bearing is free end bearing and as such may have wavy (or thrust) washers under bearing outer race and shims under bearing inner race. A grease slinger may also be present under the inner race of inlet and outlet bearing. It is important to note the type and quantity of hardware removed with the bearing because the bearing must be re-installed in exactly the same manner.

NOTE: Model 2000 blowers use no bearing shims.

g. Remove bolts that fasten the bearing housing to the head.
h. Use a puller to pull the bearing housing away from the head. The bearing will come off with the housing. Do not use wedges or hammer to pry housing as damage may result.
i. Remove gasket.
j. Carefully invert bearing housing on a clean surface and lightly tap on back of bearing until it drops out of housing.
k. Thoroughly clean all parts. At this time, it is important to inspect all parts removed, and replace those which show wear or damage.

A bearing, once removed for any reason, must always be replaced regardless of its condition or appearance. Removal poses the risk of damage or contamination. All gaskets must be replaced with Lamson factory replacements regardless of appearance or condition. The gasket thicknesses are critical to component spacing.

Failure to adhere to above may void factory warranty.

2. Opposite drive end bearing
   Delete steps a, b and c above and proceed as outlined in steps d through k.
3. Bearing replacement
   a. To complete bearing reassembly, reverse the procedure for removal.
   b. Place new gasket between head and bearing housing and hold in place with a small amount of grease. Lamson does not recommend adhesive since it will make future replacement difficult.
   c. Bolt bearing housing firmly to head making sure that oil return hole in the brass labyrinth is on the bottom. Tighten bolts slowly and evenly in an alternating pattern.

   Use the following procedures while installing the new bearing to facilitate installation and minimize damage to the bearing.

* Keep all parts, work areas, installation tools clean and free from debris.
* Apply a light coat of oil or grease to housing bore, shaft journal and lands of brass labyrinth. Apply a light coat of grease or oil to the bearing surfaces only.
* Lamson bearings do not need to be pressed into the housing or onto the shaft. The bearing should be lightly tapped into position by applying force to the inner and outer race simultaneously. Never hammer on a bearing or use excessive force for installation.
* Do not apply excessive amounts of heat to bearing. It is not necessary. A light heating may be used if desired.
* Lamson can provide special bearing drivers for installation. Consult Lamson Service for details.

d. After bearing change is complete, start machine and retighten the labyrinth seals.

Lamson has available, in stock for immediate shipment, Bearing Kits that contain all the items required for complete bearing changes on both ends of the machine. Call factory for details.

B. Seal removal and replacement

Labyrinth seals are a non-contact air seal at the shaft. Their replacement is necessary when air begins to escape from inside the centrifugal. A slight amount of leakage is normal and not cause for seal replacement.

1. To replace seals, the bearing housings must be removed. Follow the procedure in Section XI-A for bearing and bearing housing removal.
2. After the bearing housing is removed, the seal can be removed.

NOTE: There are no gaskets under the labyrinth seal.

3. To replace seal, apply a coating of grease to the lands of the labyrinth and CAREFULLY slide seal over shaft. Too much grease will negate the effectiveness of seal. Do not fill grooves. The labyrinth is babbitt and is soft. Mishandling will result in damage.
4. Bolt seal to head HANDTIGHT only. The seal should only be tightened after the machine is completely reassembled and while the machine is running.
5. On gas machines, the seals must be installed with spring washers, and the mounting bolts must be "loc-tited". Tighten the screws just enough to allow the seal to self center when the bearing is installed. The "loc-tite" will lock the mounting bolts in place so that the seal stays centered on the shaft.

C. Coupling and V-Belt drive component maintenance

Lamson uses a variety of couplings and belt drives. Proper use and maintenance is critical to the operation of the machine and safety of personnel. Prior to starting machine, coupling alignment must always be performed by installer of equipment (see Section VII).

a. After alignment and at periodic intervals thereafter check to make sure set screws are tight.
b. Check center element or disc packs for wear and replace worn parts immediately.
c. If coupling is a lubricated type coupling, be sure to follow manufacturers lubrication schedule.
d. Check and correct as necessary shaft and hub spacing.
e. Always operate machinery with coupling guard in place.
f. Always check coupling spacing at shaft separation. Improper spacing will cause elevated vibration readings.
g. On sleeve bearing motors, be sure motor shaft is in correct axial position.

D. V-Belt maintenance

1. After initial run-in period, re-tension belts as necessary (see Section VII).
2. Always use matched belts.
3. Never install belts by rolling them over the sheave as this will shorten life considerably. Loosen motor and move sheaves closer together to remove and install belts.
4. Inspect belts for cracks or heat glazing and replace if evident.
5. Never use belt dressing.
6. Use only belts identical to those originally supplied.

E. Carbon Ring maintenance

1. For removal of carbon ring assemblies, see Section XI-B on labyrinth seal repair and removal and follow the same procedure.
2. Use caution when working with carbon rings as they are extremely brittle and break easily. Check for cracks or chips and replace as necessary.
3. Typical labyrinth and carbon ring arrangements are shown on the following page.

F. Parts for Replacement

Most replacement parts are available from Syracuse factory inventory for same day shipment. When ordering replacement parts, please have available the machine serial number and catalog or model number, as well as any additional information such as special application, etc., which will help expedite your parts shipment. The following illustration in Appendix C will assist in determining which replacement parts are needed as well as serve as a guide to do some simple maintenance.

Figure 23

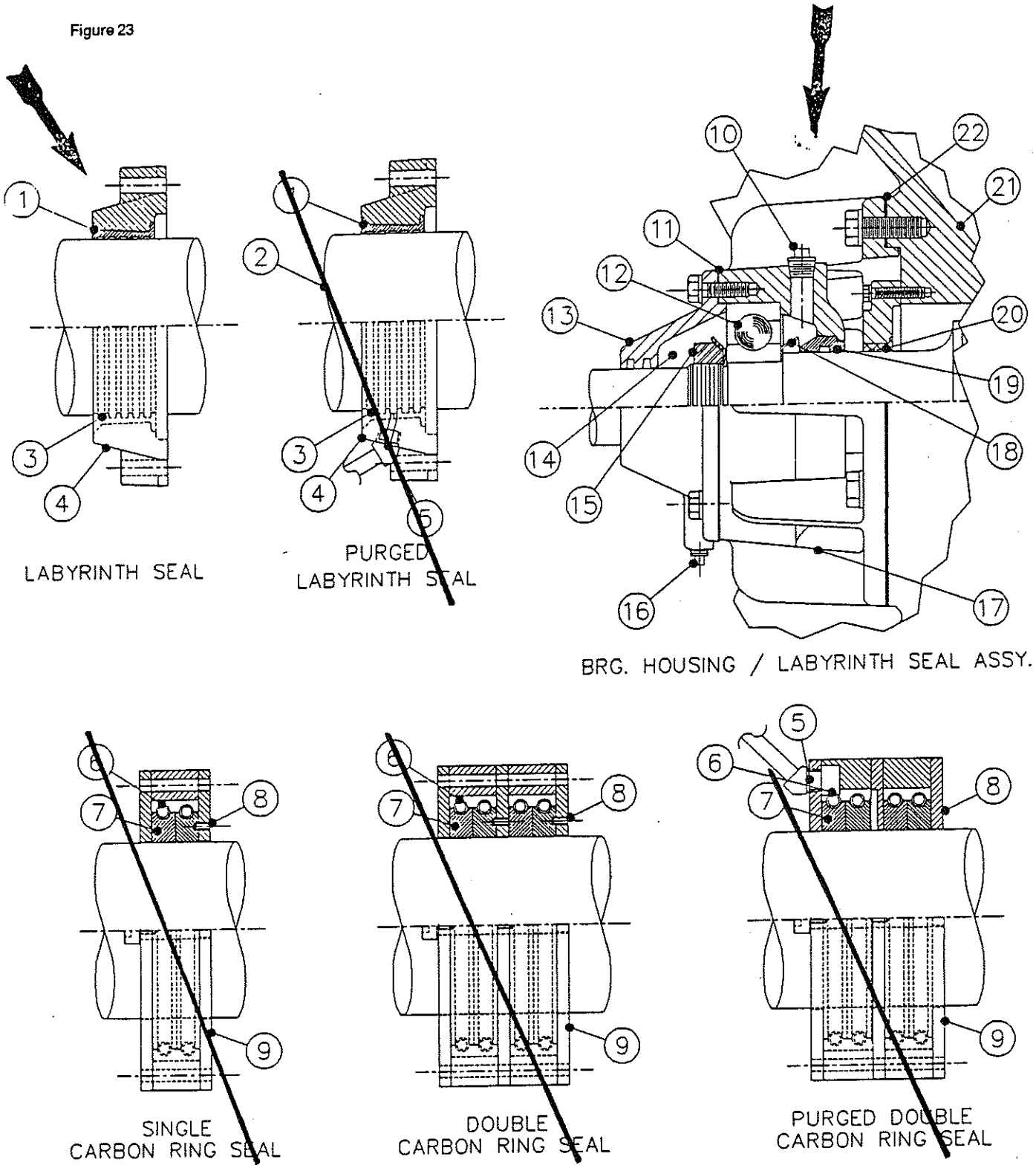

1 BABBITT LABYRINTH SEAL
2 SHAFT
3 LANDS & GROOVES
4 CAST IRON HOUSING
5 PURGE CONNECTION
6 S/S GARTER SPRING
7 SEGMENTED CARBON ELEMENTS
8 ELEMENT LOCKING PIN
9 STEEL HOUSING
10 GREASE INJECTION PORT
11 CAP GASKET
12 BALL BEARING
13 CAST IRON BEARING CAP
14 GREASE RESERVOIR
15 BRG. L'WASHER & L'NUT
16 GREASE PURGE PORT
17 CAST IRON BEARING HSG.
18 GREASE SLINGER
19 NON-SCORING LAB'Y SEAL & STANDBY SHAFT SUPPORT
20 BABBITT LABYRINTH SEAL
21 CAST IRON INLET/OUTLET HEAD
22 HEAD GASKET, HEAT BARRIER TYPE

GAS ASSEMBLY

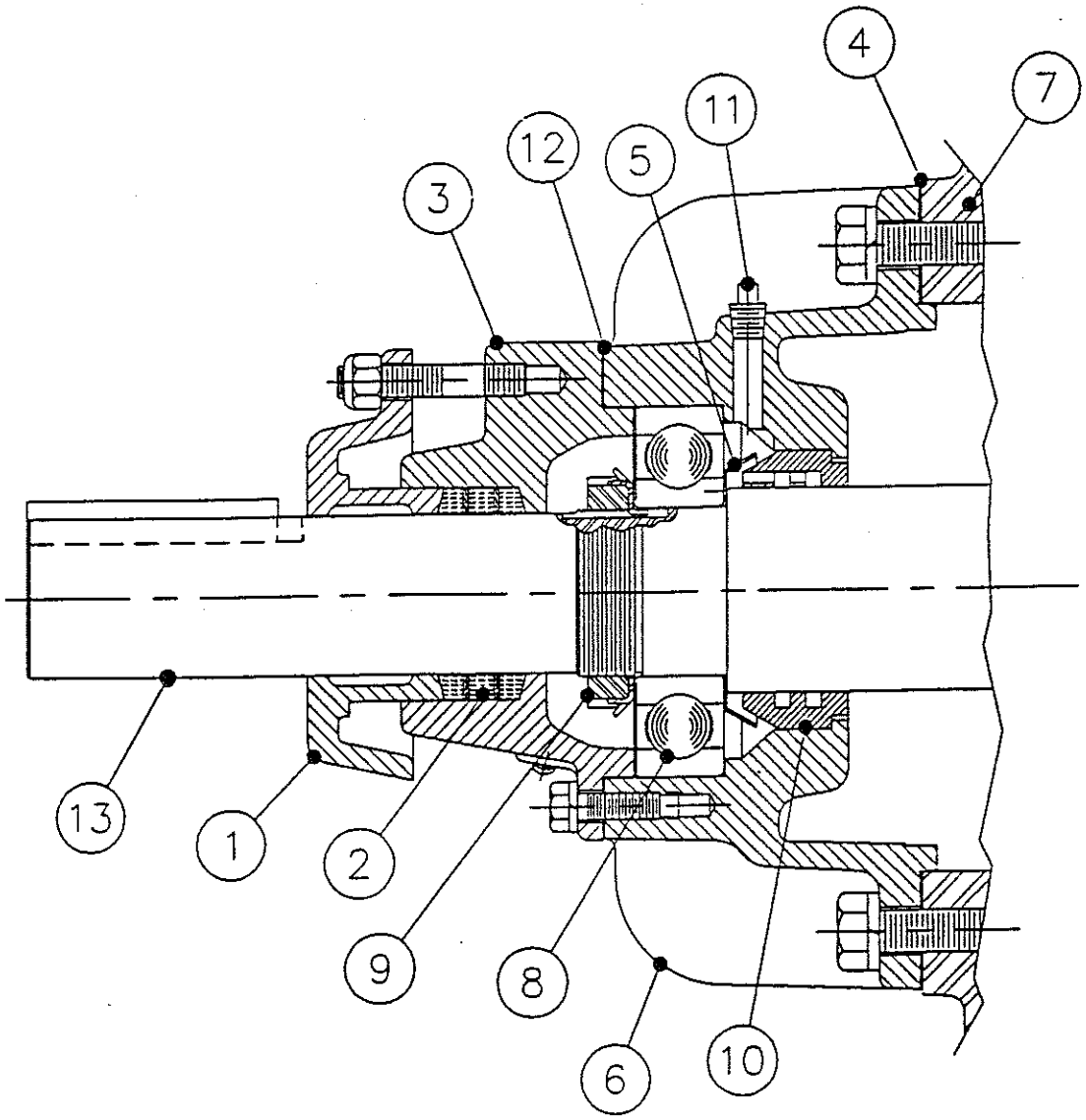

1 PACKING GLAND
2 PACKING
3 PACKING HOUSING
4 HEAD GASKET
5 GREASE SLINGER
6 BEARING HOUSING
7 CAST IRON INLET/OUTLET HD.
8 BALL BEARING
9 BEARING L'WASHER & L'NUT
10 NON-SCORING LAB'Y SEAL & STANDBY SHAFT SUPPORT
11 GREASE INJECTION PORT
12 CAP GASKET
13 SHAFT

XII. SmartMeter

Lamson SmartMeters are microprocessor based digital monitors that are specifically designed to monitor your Lamson centrifugal's performance. These monitors are optional and may not be a part of your equipment package.

SmartMeters, generally speaking, are not user serviceable. Consult factory for service on your Lamson SmartMeter(s).

A. Installation and Start-up

If the field wiring drawings (BA11XX) or contract drawings are followed, startup should go smoothly. If installation is not completed in the manner recommended by the drawings, problems could develop.

In these cases, especially in reference to start control circuits, make sure that a run signal (120VAC) is present on J1-PIN5 of the meter when the start pushbutton or switch is engaged. This signal tells the microprocessor the machine is running in order to keep track of start delays, etc. Also, make sure shielded cable is used where shown on drawings in order to minimize electrical noise.

Pay attention to the current transformer primary turns marked on top of the C.T. shipped with the job. The number of turns indicated is required for the surge meter to display AMPS and CFM correctly and to protect the machine. Please consult factory for any other questions or problems that may come up.

B. Operation

The line of SmartMeters was designed with the thought of keeping as much hardware as possible the same. Inside the meters, the logic boards and display boards are the same. The only things that change are the input modules and decals on the front. The combination of input modules, decals and software create the various configurations that make up surge, temperature, pressure and vibration meters as offered in the sales literature.

The "bare" meter, without control enclosure, wiring and transmitters, has one series of part numbers (example: SM100099). The same meter with enclosure, transmitters and factory control wiring has another set of part numbers (example: BA1132). Factory orders are to be entered with the BA11XX series drawings. A drawing is shipped inside of each control assembly for use in field wiring. The descriptions of the following meter types will reference the BA11XX number. The bare meter number and product data sheet numbers are also listed for reference.

First is a descripton of front panel operation for all meter types:

After meter is first powered up, you will be able to access the initial factory configuration values through the front panel pushbuttons.

1. Viewing surge, design and full load points (applies to surge control meters only)
By pressing the up arrow, you can view surge (sur), design (des), and full load (full). The down arrow will step back through the points. These points can readily be viewed by an operator to determine where the machine is currently operating versus the design. You must exit this mode prior to entering the changing of setpoints mode.

2. Changing Set Points
Each type of meter has set points that have different functions. To access these set points, hold left arrow. While holding left arrow, press down arrow, then up arrow, then right arrow and then release left arrow. P1-1 will appear. All other set points can be viewed by pressing right arrow. Left arrow returns you to P1-1. While at any set point, up and down arrows raise and lower set points. This feature allows for field adjustments of the factory presets. Meter will return to normal display after 30 seconds if push buttons are not touched.

NOTE: <u>VERY IMPORTANT TO RETAIN SET POINTS</u>

When exiting set points, you must left arrow key to normal display for changes to be saved. All changes made will be updated in eeprom memory. Power losses will not cause these changes to be lost. NOTE: All timer settings are adjustable from 0-50 seconds.

The following meters are all surge control configurations:

	Set Points	
BA1132 Surge Shutdown* SM100099 Meter 25.23.88 Product Data sheet	P1-1 rd	Shutdown Start delay
BA1130 Dual Set Point Bleed* SM100099 Meter 25.23.86 Product Data sheet	P1-1 P1-2	Opens valve Closes valve
BA1131 Modulating Bleed* SM100099 Meter 25.23.87 Product Data sheet	P1-1 P1-2	Opens valve Closes valve

* These three meter types use the same front decal. Some LED's will not be used on each unit.

	Set Points	
BA1140 General Purpose Meter SM100090 Meter 25.23.96 Product Data sheet	P1-1	Surge
	P1-2	Impending surge
	P1-3	Impending overload
	P1-4	Overload
	d1-1	Surge delay time
	d1-4	Overload delay time
	rd	Blower start delay time
BA1133 Bearing Temperature Monitor SM100097 Meter 25.23.89 Product Data sheet	P1-3	Inlet bearing warning
	P1-4	Inlet bearing shutdown
	P2-3	Outlet bearing warning
	P2-4	Outlet bearing shutdown
	d1-4	Inlet bearing shutdown delay
	d2-4	Outlet bearing shutdown delay

This unit offers two displays. The upper display is for inlet bearing temperature, and the lower is for outlet bearing temperature. The displays are in degrees Fahrenheit.

The unit has two inpurts from 3 wire, 100 OHM platinum RTD's (resistance temperature detectors).

The unit has two channels with dual level on each channel.

XIII. TROUBLESHOOTING GUIDE

Problem: (A) Low Air Flow or Loss of Pressure	For more information see... SECTION	PARAGRAPH
1. Incorrect machine rotation	VIII	A.8
2. Restricted inlet piping	CHECK SYSTEM	
--Valve not full open	VI	E.1
--Dirty filters	VI	E.3
--Shipping covers not removed	VI	E.1
3. Partially blocked outlet piping	CHECK SYSTEM	
--Open all outlet valves	VIII	A.8
--Check valve in proper direction	VI	E.2
--Clogged diffusers	VI	E.3
4. Gauge not reading accurately	VIII	C.2
5. Decreased motor speed	VI	
--Incorrect voltage	VI	E.5
--Incorrect phasing	VI	E.5
6. Incorrect reassembly of machine	XII	A-E
7. Increased inlet temperature	VIII	B.A
8. Increased inlet pressure	VIII	B.A
9. Improper design, or assembly, of the piping system	VI	D.1
10. Worn impellers	CONSULT FACTORY	
11. Foreign material in machine	VI	E.3

Problem: (B) Excessive Vibration		
1. Baseplate must never be bolted down or grouted in	VI	C
2. Isolation pads	VI	C
--Positioned incorrectly	VI	C
--Improperly sized	VI	C
3. Expansion joints	VI	D
--Machine must be isolated from system piping by flexible sleeves or expansion joints. **NEVER** bolt piping directly to blower.	VI	D
4. Misalignment	VII	
--The number one cause of excessive vibration in Lamson equipment.	VII	A-B
5. Foundation	VI	B
--Machine must be mounted on a SOLID, level foundation. Recommend 6" thick concrete pad on a solid ground floor.	VI	B
6. Unsupported piping	VI	D
--The piping system must be adequately supported above the flexible connections.	VI	D

	SECTION	PARAGRAPH
7. Loose hold-down bolts		
--The motor and machine hold-down bolts may have loosened.	CONSULT FACTORY	
8. Foreign material in machine		
--Liquids (such as water, etc.)	CONSULT FACTORY	
--Hardware (such as bolts, filter pieces, etc.)	CONSULT FACTORY	
--Dirt and grease buildup over time.	CONSULT FACTORY	
9. Surge		
--Adjust valves to keep blower from operating in the surge range.	CONSULT FACTORY	
--Blocked inlet or outlet piping	CONSULT FACTORY	
10. Motor vibration		
--Improper voltage	VI	E.5
--Failing motor bearings	CONSULT FACTORY	
--Imbalance within motor (such as broken fan, etc.)	CONSULT FACTORY	
11. Centrifugal bearings		
--Damaged during replacement	XIII	A.3
--Over lubrication, or wrong type of lubricant	VIII	A.5
--Wrong type of bearings	XIII	F.1
--Inadequate storage maintenance	IV, V	
12. Coupling	VIII	
--Improper lubrication	VIII	A.5
--Incorrect shaft spacing	V	E.1
--Imbalance (such as damaged coupling or wrong size key)	CONSULT FACTORY	
--Loosened set screws	CONSULT FACTORY	
13. Imbalance		
--Motor (due to rotor, bearings, or fan)	CONSULT FACTORY	
--Coupling	CONSULT FACTORY	
--Centrifugal (due to impellers, shaft, or bearings)	CONSULT FACTORY	

Problem: (C) Noisy Machine

1. Noisy bearings (motor or machine)		
--Too much grease -- bearings hot	VIII	A.5
--Too little grease -- bearings dry	VIII	A.5
--Bearings failing	CONSULT FACTORY	
--Retainer/locknut loosened	XII	A
--Bearing housing worn	XII	A
--Bearing overload, excessive thrust due to higher density of air	CONSULT FACTORY	
--Incorrect installation	XII	A
2. Coupling spacing incorrect	CONSULT FACTORY	
3. Foreign material in machine	CONSULT FACTORY	
4. Foreign material in piping	CONSULT FACTORY	

	SECTION	PARAGRAPH
5. Surge	IX	
6. Labyrinth seal(s) contacting shaft	XII	B
7. Noisy motor		
--Incorrect voltage	CONSULT FACTORY	
--Low voltage (+10% of nameplate)	CONSULT FACTORY	
--Voltage imbalance (+10% between legs)	CONSULT FACTORY	
--Low frequency (60 Hz vs. 50 Hz)	CONSULT FACTORY	
--Damaged bearings	CONSULT FACTORY	
--Defective fan	CONSULT FACTORY	
--Loose internal parts	CONSULT FACTORY	
--Excessive amperage draw (must not exceed nameplate)	CONSULT FACTORY	
8. Inadequate shaft spacing	CONSULT FACTORY	
9. Loose or damaged coupling	CONSULT FACTORY	

Problem: (D) Oil Leakage

1. Oil level too high	X	A
--Operator or maintenance personnel overfilling oilers	X	A
--Improper oil level adjustment (trico oilers)	X	A
--Incorrect replenishing procedure	X	A
2. Wrong type of oil (Use recommended oils ONLY)	CONSULT FACTORY	
3. Breather vent clogged (trico oilers), or vent hose clogged or pinched (oilrite oilers)	CONSULT FACTORY	
4. Air labyrinth seal leaking excessively	CONSULT FACTORY	
5. Incorrect bearing assembly	XII	A
--Oil slinger bent or not positioned properly	CONSULT FACTORY	
--Housing gasket loosened or damaged	CONSULT FACTORY	
--Gasket blocking oil return hold	CONSULT FACTORY	
--Brass labyrinth seal oil drain holes not at bottom, or labyrinth loose in bearing housing	CONSULT FACTORY	
6. Shaft not concentric with seal	CONSULT FACTORY	
7. Thumbscrew/Feed stem not seated all the way down (oilrite oilers)	CONSULT OILER O & M	
8. Oil reservoir glass cracked (Oilrite oilers)	CONSULT FACTORY	
9. Loose connections to oiler	CONSULT OILER O & M	
10. Oilers located on wrong side of machine	CONSULT FACTORY	

Problem: (E) Overheating

I. Overheating Machine		
1.Surge		
2.Inadequate air flow	SEE PROBLEM A	
3.Clogged intake air filters	VII	E.3

	SECTION	PARAGRAPH
4.Machine being back-pressured excessively by downstream process	CHECK SYSTEM	
5.Inadequate ventilation in room	CHECK SYSTEM	
6.Intake too hot	CHECK SYSTEM	
II. Overheating Bearings		
1.Damaged bearings		
--Excessive lubrication, or wrong type	X	A,B
--Incorrect class of bearings	XII	A
--Improper assembly procedure	XII	A,B
2.High ambient temperatures	XIII	B
III. Of Motor		
1.High ambient temperatures	XIII	B
2.Incorrect voltage	VI	E.5
3.Unbalanced voltage supply	VI	E.5
4.Restricted air flow (for cooling)	CHECK SURROUNDINGS	
5.Motor overloaded -- motor too small for system	CONSULT FACTORY	
6.Improperly tensioned belts on v-belt drive systems	VII	B
7.Fuses improperly sized	VI	E.5
8.Bearing failure	XII	A
9.Motor overload -- heaters improperly sized	VI	E.5
10.Shorted starter windings	CONSULT FACTORY	
11.Too frequent starting	CONSULT FACTORY	
12.Motor fan rotation incorrect	CONSULT FACTORY	

Problem: (F) Repeated Bearing Failures

1. Not using Lamson bearings	CONSULT FACTORY	
2. Not using Lamson recommended lubricant	X	A,B
3. Excessive lubrication	X	A,B
4. Improper assembly	XII	A
--Correct number of bearing shims	XII	A
--Wavy washer positioned properly	XII	A
--Oil and grease slingers positioned properly	XII	A
--All gaskets to original thickness specs	XII	A
5. Bearing housings worn excessively, shaft journal worn	CONSULT FACTORY	
6. Coupling alignment	VII	A
--Coupling manufacturer specs followed for:		
a) hub-to-hub spacing	COUPLING O & M	
b) shaft-to-shaft axial clearance	COUPLING O & M	
c) lubrication (if required)	COUPLING O & M	
7. Shafts not rotated weekly on idle units	V	3
8. NOTE: Many non-mechanical problems can lead to frequent or repeated bearing failure. They may include improper installation, application or operation of machine.	CONSULT FACTORY	

	SECTION PARAGRAPH
Problem: (G) Surge	
1. Restricted inlet piping	VI,VII
2. Blocked outlet piping	CHECK SYSTEM
3. Increased fluid level in aeration tank	CONSULT FACTORY
4. System imbalance	CONSULT FACTORY
5. Incorrect valving or valve timing [See problem (A) , page 30]	CONSULT FACTORY

SURGE IN CENTRIFUGAL COMPRESSORS (BLOWERS & EXHAUSTERS)

A centrifugal blower is normally connected to a piping system, and delivers air through that system for ultimate use on some required operation. If the demand of this operation (and consequently of the piping system) gradually or suddenly decreases, the pressure from the blower and in the piping system will increase untill it reaches the highest pressure peak of which the blower is capable.

If the load or volume requirement (demand) decreases still further, the blower delivery pressure tends to decrease from its peak, resulting in the pressure in the piping system becoming greater than the pressure from the blower. Air then tends to reverse its direction and flow back into the blower, until both pressures become equalized and the blower can again resume its normal function of pumping air into the system.

Until demand requirements increase, this backward and then forward flow of air -- this pulsation or surge -- will continue. It can cause undo strains on the blower, and possibly failure of bearings and/or rotating assembly due to repetitve thrust strain and overheating. It is costly and dangerous to permit volume (load) requirements to drop so low as to cause surge.

Perhaps the foregoing will be more easily understood by reference to the sketch below, which is a typical pressure volume curve of a centrifugal blower. Point "A" indicates the normal operating point of a blower. Point "E" is the high point on the curve. Stable conditions will always be experienced when the volume demand is to the right of this point. Under actual operation, surge is not a factor until the volume demand of the system drops to a point to the left of point "E", and until pressure consequently drops below that at point "E".

The frequency and intensity of pulsation or surge depend upon the slope of the characteristic curve of the blower involved, the rate at which the air is being removed, the pressure in the blower, and the volume of the piping system to which the blower is delivering air. Backward curved impellers have a lower volume than units with radial vane impellers. Occasionally a blower will deliver air to a system so balanced that resonance occurs; in this case, even a slight surge will build up forces to significant amounts.

These same principles apply whether a centrifugal unit is operating as a blower or an exhauster.

The approximate surge point is commonly shown on blower and exhauster performance curves by a dotted line, as illustrated below.

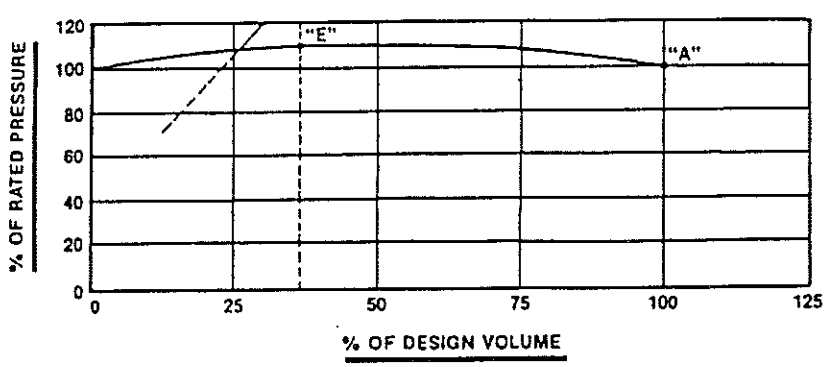

APPENDIX A

Soft foot is the condition whereby not all of the support points of a machine rest evenly on their anchoring surface. Soft foot is present if the machine mounting foot moves when any of the anchor bolts are loosened.

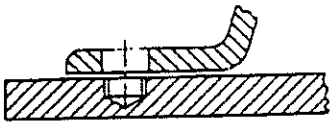

"Short-Leg"

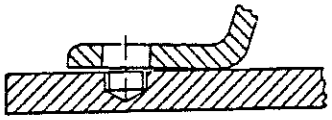

"Tilted Leg"

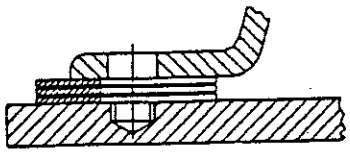

"Deck of Cards"

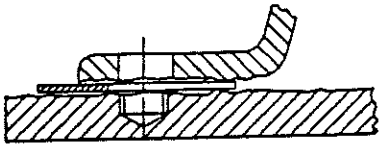

"Rough/Dirty Surfaces"

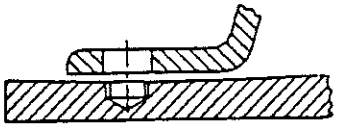

"Bowed Baseplate"

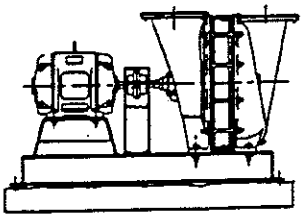

"Foundation Irregularities"

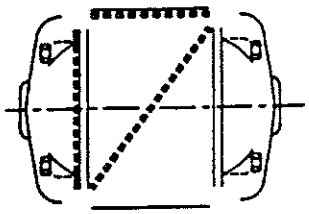

Table-Leg effect: Machine resting on 3 feet, shim one foot only.

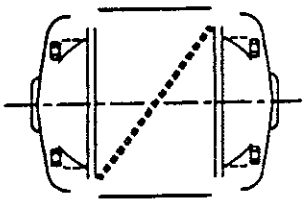

Diagonal effect: Machine resting on 2 feet, split the additional shims evenly between the two soft feet.

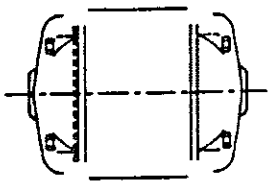

Slanted Pedestal effect: Machine resting on two feet leaving other side or end higher, shim equally to bring the plane formed by the bottom of the four feet parallel with the baseplate or pedestal.

APPENDIX B

REPAIR SHOPS AND SERVICE TECHNICIANS

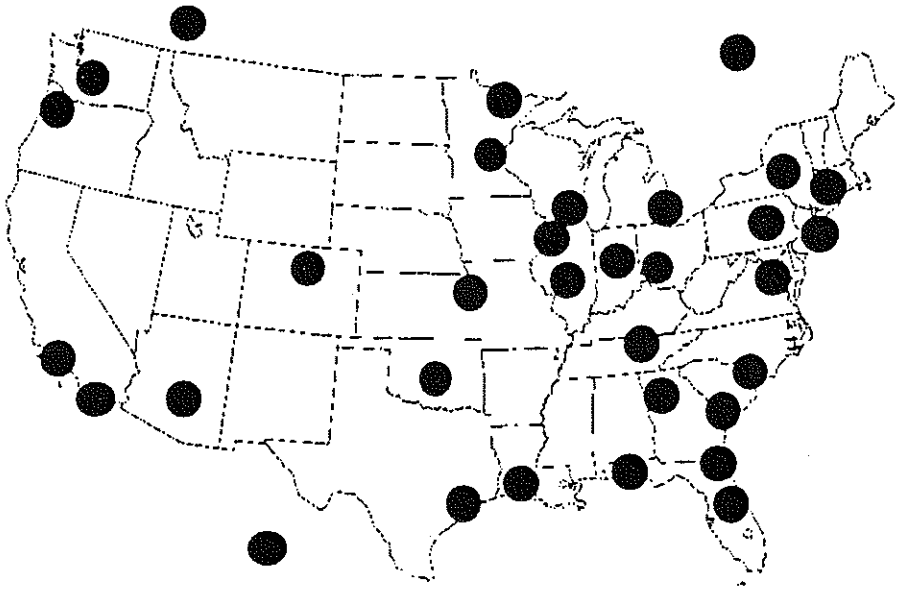

Lamson Authorized Field Repair

Lamson Corporation has factory service available from our Syracuse, New York and El Cajon, California facilities. We also utilize numerous trained and factory authorized service facilities throughout the U.S.A. in locations shown above. Please consult Lamson Corporation for details at (315) 433-5500, (800) 543-7736, or (315) 433-5451 (fax).

Lamson Corporation
P.O. Box 4857
1 Lamson Street
Syracuse, NY 13221

Lamson Corporation
West Coast Service
1099 N. Cuyamaca Street
El Cajon, CA 92020

In addition, International Service is available in the following locaitons:

EUROPE

Lamson Europe
3 rue Charles-Francois
Daubigny
95870 Bezons, France
33130763576

MEXICO

Turbosopladores Y
Accessories
Rio Consulado
No. 516 ler Piso
Col. Tlatilco CPO2880
Mexico City, Mexico

FINLAND

Lievon Sahkokone Ky
Lievonmaki KenKatie 1
94770205

TAIWAN

Chien-Yu
111-10F Nanking E. Rd. Sec. 2
PO 39-1254
Taipei, Taiwan ROC
88625067411

APPENDIX C

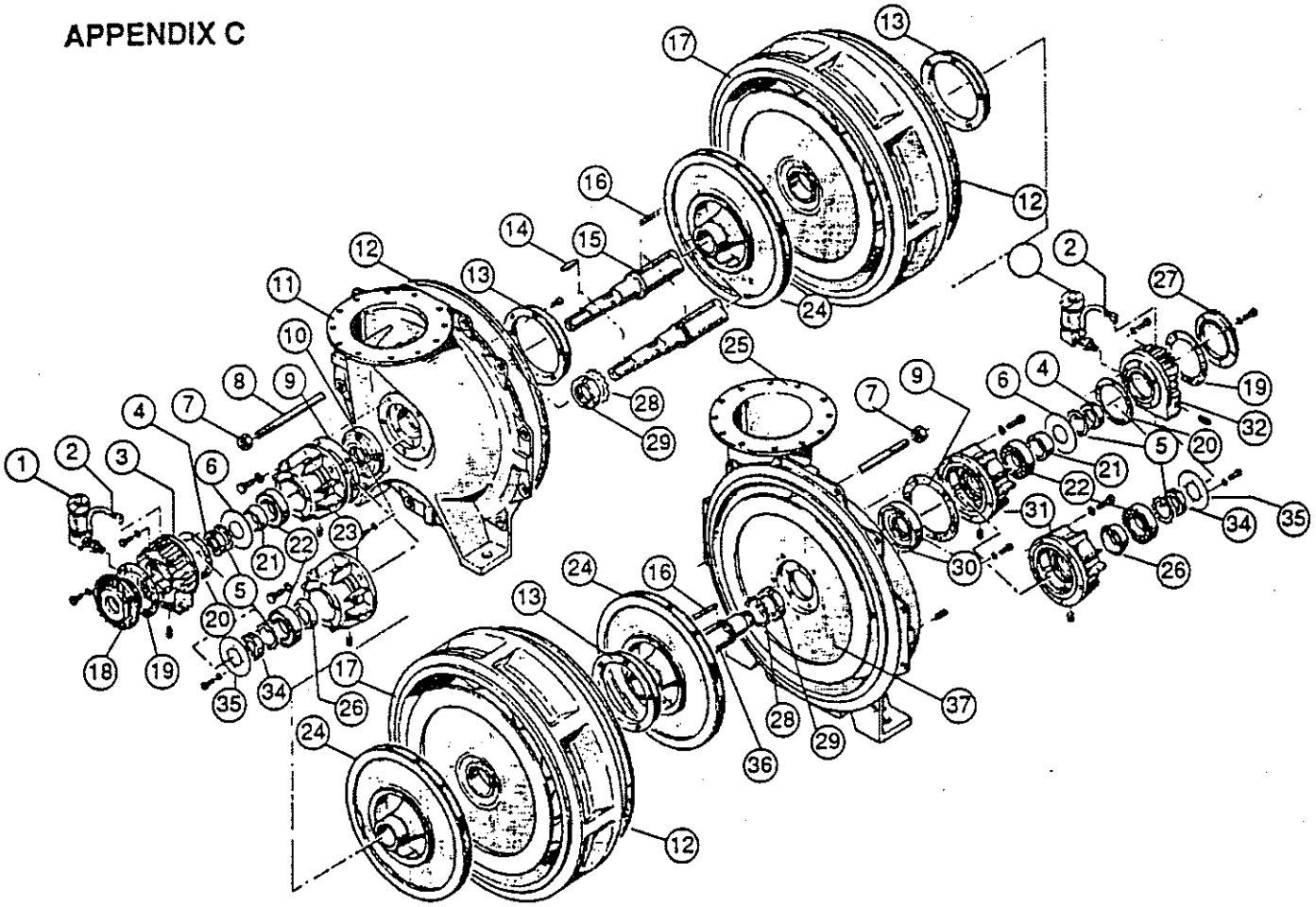

OIL LUBE ASSEMBLY
510, 550, 600, 810, 850, 860, 1210, 1250, 1260, 1400, 1800, 2000 SERIES

NO.	DESCRIPTION	NO.	DESCRIPTION
1	~~Oiler Bottle~~	21	~~Spacer, Bearing (1400-2000 only)~~
2	Vent Line	22	Bearing
3	~~Reservoir, Oil, Inlet End~~	23	Housing, Bearing, Inlet End
4	~~Locknut, Bearing (1400-2000 only)~~	24	Impeller
5	Lockwasher, Bearing	25	Head, Outlet
6	~~Slinger, Oil, W/o Mtg Holes (1400-2000 only)~~	26	Slinger, Grease (510-1260 only)
7	Nut, Lock	27	Cap, Reservoir, non-drive End
8	Tie Rod	28	Lockwasher, Impeller
9	Gasket, Head	29	Locknut, Impeller
10	Seal, Shaft, Labyrinth ~~or Carbon Ring or Special~~, Inlet End	30	Seal, Shaft, Labyrinth ~~or Carbon Ring or Special~~, Outlet End
11	Head, Inlet	31	Housing, Bearing, Outlet End
12	Sealant, Joint, Silicone RTV Compound	32	~~Reservoir, Oil, Outlet End~~
13	Ring, Baffle (all EXCEPT 510, 600, 810,1210)	34	Spacer/Locknut, Bearing (510-1260 only)
14	Key, Drive	35	~~Slinger, Oil With Mtg Holes (1400-2000 only)~~
15	Shaft	36	*Piston, Balance
16	Key, Impeller	37	*Cylinder, Balance Piston
17	Section, Intermediate		LAMSON #5 Grease (Box of 2)
18	Cap Reservoir, Drive End		
19	Gasket, Reservoir		
20	Gasket, Housing, Bearing		* Not Shown for 1800, 2000 Only

APPENDIX D

TERMS AND CONDITIONS

1. TERMS FOR ACCEPTANCE

All quotations unless withdrawn or changed by the Seller prior to acceptance, if not accepted, are deemed to be withdrawn by the Seller at the end of thirty (30) days from the date hereof. Any purchase order or other order document based hereon, when accepted by the Sellers in writing, will constitute a non-cancelable contract. Acceptance is limited to the terms hereof and no revisions or additions (whether in Purchaser's standard purchase order or otherwise) shall be effective unless agreed to in writing by Seller's authorized representative.

2. DELAY OR IMPOSSIBILITY OF PERFORMANCE

The Seller shall not be liable, in damages or otherwise, for any default or delays of production or shipment due to acts of God, fire, public enemy, factory accidents, delays in transportation, delays due to default or delay of material suppliers, strikes or other labor disputes of any kind affecting the goods described herein, any law, order or regulation hindering or rendering impossible in whole or in part the performance of the work covered by this proposal, or any other contingency beyond the control of the Seller.

3. AUTHORITY FOR CHANGES

No agent or salesman has any authority to change any price or terms herein stated. Only such changes shall be valid as are made in writing and signed by Seller's authorized representative which shall include communication by telex or fax from the Seller's home office at Syracuse, New York.

4. TITLE TO EQUIPMENT

Title to the equipment furnished hereunder will pass to the Purchaser upon delivery to the common carrier at the point of origin; but the Seller will retain a security interest in such equipment until the full purchase price or any judgment for the same is paid in full.

5. VENDOR

In furnishing and/or installing the equipment covered by this quotation, the Seller will be acting as a vendor of personal property and not as a construction contractor.

6. TAXES

Prices quoted herein do not include any Federal, state or local sales, use, or any other tax that may be levied or assessed upon a sale or purchase of the goods. Any such tax must be paid by the Purchaser, and if by law the Seller is chargeable with the collection or payment thereof, the same must be added as tax to the prices listed herein, and shall be included in the invoice price.

7. COMPLIANCE

All work done by the Seller shall be in compliance with the applicable Federal, state and local laws or ordinances.

8. LIMITED WARRANTY

The Seller hereby warrants the products of its manufacture to be free from defects in material and/or workmanship under normal use and service for a period of one (1) year. This WARRANTY applies only to equipment MANUFACTURED by Lamson Corporation and does not cover motors, starters, electrical equipment or other components or accessories manufactured by others. The Seller will repair or replace, F.O.B. its factory, any defective part or parts, at no charge, if returned to it within ONE YEAR from DATE OF SHIPMENT. This warranty extends only to the original purchaser of equipment furnished hereunder and shall be void if the product is repaired or tampered with in any manner other than by the Seller's authorized service

personnel. If inspection does not disclose a defect covered by the warranty, the equipment will be returned to Purchaser at its expense or, if Purchaser elects,the seller will repair or replace the equipment and charge for such service at the regular rate. If the Seller is not an insurer, and if Seller is held liable for loss or damage, its liability shall be limited to $100 or 10% of the contract price, whichever is greater. The above limitation or exclusion may not apply to some purchasers, who may also have other warranty rights based on laws which vary from state to state.

THE SELLER MAKES NO WARRANTIES, EXPRESS OR IMPLIED, AS TO THE MERCHANTABILITY OR AS TO THE SUITABILITY OF THE EQUIPMENT FOR ANY PARTICULAR PURPOSE, AND THE SELLER DOES NOT WARRANT THE EQUIPMENT IN ANY MANNER WHATSOEVER EXCEPT AS EXPRESSLY STATED IN THIS AGREEMENT.

9. LEGAL VALIDITY

If any provision or condition herein shall be found to be invalid under or in violation of any law or public policy of any state or of the United States, such invalidity or violation shall not affect or impair the validity of the remaining provisions.

10. ENTIRE AGREEMENT

Any contract resulting from this proposal, including any specifications and drawings pertaining hereto, contains all express or implied agreements of the parties made in connection therewith and no oral or other agreements or understandings conflicting with or in addition to the provisions hereof or of the specifications and drawings shall be of any effect unless in writing, signed by both parties hereto; and all alterations or changes to be made, if any, shall be subject to further negotiations, and if agreed upon, must be reduced to a writing signed by both parties.

11. PAYMENT

Payment will be at 100% of invoice, payable in net 30 days. The Seller also reserves the right, if the contract calls for any retentions, to waive the retentions by providing a maintenance bond from its surety until acceptance of its equipment or for a period not to exceed two (2) years.

12. SUPPLEMENTAL TERMS

Any supplemental terms or conditions typed by Seller on the face hereof or attached hereto by Seller, including drawings and specifications, shall prevail if there is any inconsistency between them and these printed terms and conditions.

13. RIGHT TO INSPECT

Purchaser shall have the right to inspect and test the goods to be furnished hereunder at all reasonable times and place during manufacture and before delivery.

14. ASSIGNMENT PROHIBITED

Purchaser may not assign or sublet any rights under the proposal without the prior written consent of Seller

15. GOVERNING LAW

Any contract resulting from this proposal shall be governed by the internal laws of the State of New York.

16. WAIVER

Failure by Seller in any instance to insist upon observance or performance of any term, condition or provision by Purchaser shall not be deemed a waiver of such term, condition or provision. No waiver shall be binding upon Seller unless in a writing signed by Seller. Receipt of payment by Seller with knowledge of any breach shall not be deemed a waiver of such breach or of any other breach by purchaser.

MAINTENANCE LOG

DATE	SERVICE PERFORMED	BY	REMARKS

MAINTENANCE LOG

DATE	SERVICE PERFORMED	BY	REMARKS

Dialog™ Plus

User's Guide

KAYE

Contents

Sections

1. Introduction 1

2. Installation 3

Unpacking 3
I/O board 3
Memory Clear 4
Making holes for the connections and mounting the unit 5
Making the telephone connection 6
Connecting the digital inputs 6
Connecting the relay output to an external device (optional) 7
Selecting the AC power voltage 8
Connecting AC power 8
External DC operation (optional) 9
Adjusting the speaker volume 9
Connecting the printer (optional) 10
Connecting the radio interface (optional) 10

3. Quick Start 11

Front panel indicators 12
Programming telephone numbers 13
Programming an alarm message (optional) 14
Testing the system 15
For more information 15

4. How DiaLog Plus Works 17

What is DiaLog Plus? 17
Programming 17
Alarm notification 18
Status reports 20
Listen In 20
Hard copy documentation 20
Automatic battery backup 20
Local telephone communications 21

5. Programming DiaLog Plus 23

Keys 23
Voice prompts 24
Getting ready to program 28
Checking your entries 28
Setup 29
  Date/Time and Clock Format 30
  Telephone Lists 30
  Call In Acknowledge 31
  Redial Number 32
  Printer Port 33
  Relay Output 34
Audio Settings 35
System Configuration 36
  System Identification 37
  Date and Time 39
  Access Code 40
  Telephone Numbers 40
  Message Repeats 43
  Ring Count 43
  Delays 44
  Status Notification Schedule 45
  Disarmed/Armed Schedule 48
  Holiday Calendar 51
Channel Configuration 53
  Channel State 54
  Channel Messages 55
  Channel Mode 58
  Telephone List 59
  Alarm Delay 60
  Limits 61
  Resets 62

Output Type (RO only) 63
Change State (RO only) 64
Programming Forms 65-70

6. Using DiaLog Plus 71

Acknowledge 72
Cancel alarm call-outs 72
System Status request 72
Bypass mode 74
Run mode 74
Call Out 75
Listen In 76
Print configuration report 77
Reset channel counters 79

Appendices

A. Specifications 81
B. Open Collector/TTL Logic Interfaces 82
C. Relay Output Surge Suppression 83
D. Radio Interface 84
E. Dimensions 85
F. Hardware Warranty 86
G. Telephone Company Rights and Obligations 88
H. FCC Rules, Class B 89
I. DOC Requirements 90
J. Canadian Emissions Regulations 91
K. Power Up Diagnostic Tests 92
L. Battery Test Procedure and Reserve Power Estimates 94

Glossary 95

Index 99

Tables

1. Front Panel LED's 12
2. DiaLog Plus factory settings 22
3. DiaLog Plus programming selections 25-27
4. Setup 29
5. System configuration 36
6. Channel configuration 53
7. Operating keystrokes 71

Figures

1. DiaLog Plus I/O board 4
2. Input wiring: preferred 7
3. Input wiring: alternative 7
4. Ferrite bead installation 8
5. Speaker volume potentiometer 9
6. Front panel shortcut keys 23

1. Introduction

The *DiaLog Plus User's Guide* gives you the basics first, so you can get your system up and running without delay.

Section 2 explains the physical installation procedures.

Section 3 takes you step by step through the small amount of programming required to put DiaLog Plus into operation.

Section 4 is an overview of how the system works and an introduction to DiaLog's many features.

Section 5 explains how to program these features and provides detailed information on each one.

Section 6 covers day-to-day operating procedures.

In this manual, the terms DiaLog Plus and DiaLog are used interchangeably.

2. Installation

This section describes the DiaLog Plus Input/Output (I/O) board and tells you how to test system operation, make the holes for the wiring, connect the telephone, wire the digital inputs and the relay output, make the power connection, and connect a serial printer cable.

Unpacking

DiaLog Plus is shipped with a telephone cord and cord grip fitting, Recommended Hole Area template, User's Guide, Quick Reference Card, and a ferrite bead for your power cable to provide optimum RF immunity.

I/O board

Accessing the board

To access the DiaLog Plus I/O board, loosen the top and bottom screws on the right side of the enclosure cover and open. Pull firmly on the knob on the right side of the front panel.

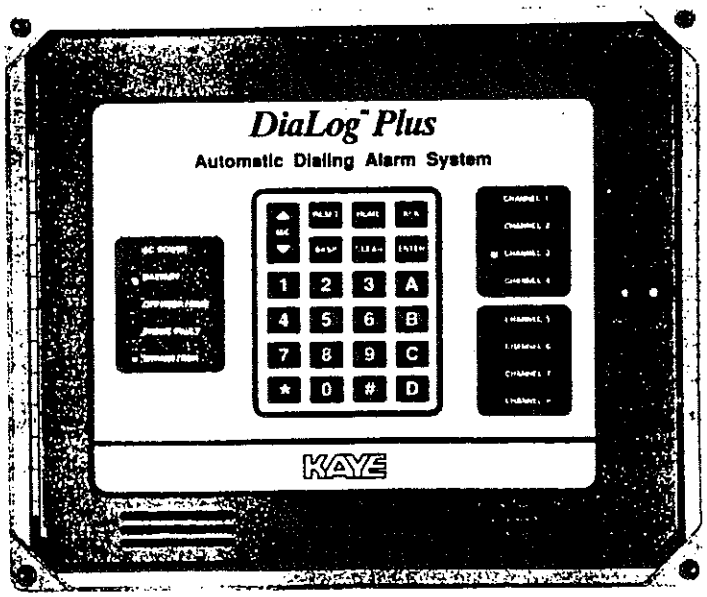

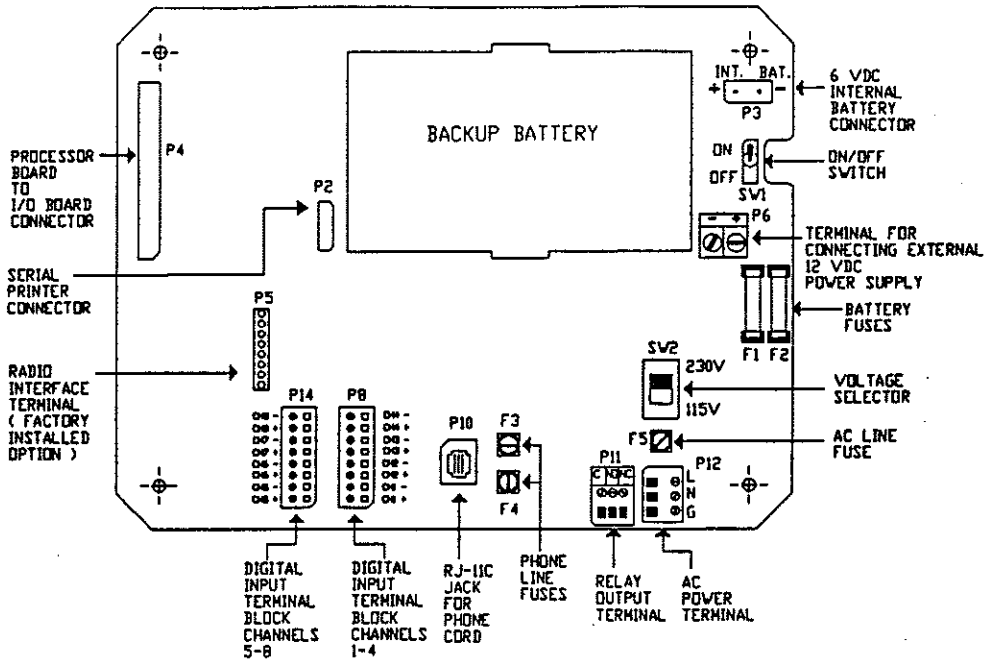

Figure 1. DiaLog Plus I/O Board

Memory Clear

Self-test procedures

The Memory Clear procedure tests the front panel indicator lights (LED's) and voice message system. It also restores all parameters to the factory settings, ensuring that the system is ready to call out on alarm as soon as you program a list of telephone numbers. If an Access Code has been programmed, you must clear the Access Code before you can clear the memory.

To perform a Memory Clear, start with the power switch (SW1 in Figure 1) OFF. Press and hold the CLEAR key on the front panel while you flip the power switch ON. DiaLog Plus executes its power up diagnostic tests, running through the following sequence:

- The LED's on the front panel blink in various patterns, indicating different tests.
- If primary power is not connected, the BATTERY indicator goes to steady On to show that the system is running on the backup battery.
- The BYPASS/RUN indicator blinks continuously to show that the system is in Bypass mode (ready for programming).
- The system says, "This is DiaLog Plus [firmware version level]. Monday, January 1, 1990. 0 hours, 0 minutes. Please wait. . . Memory Cleared. Setup. Enter Setup selection."

"Please wait" tells you that DiaLog is clearing any extraneous programming from memory. "Memory Cleared. Setup" indicates that all parameters are restored to the factory settings, and that DiaLog Plus is ready for you to make any desired changes in basic parameters such as the Date and Time format or the Printer Port Baud Rate. (Table 2 in Section 4, *How DiaLog Plus Works*, lists the factory settings; Section 5, *Programming*, explains the Setup parameters.)

If DiaLog does not speak the above message, repeat the Memory Clear procedure. If you still do not hear the message, note carefully which of the front panel LED's are lit. If possible, stay at the front panel while you call Kaye Customer Service at (800) 343-4624, so you can describe the LED pattern to the Customer Service engineer. The LED's identify which diagnostic test has failed. See Appendix K for details on the power up diagnostics.

Making holes for the connections and mounting the unit

The DiaLog Plus enclosure is a NEMA 4X-rated, weathertight, corrosion resistant design. The system comes with a Recommended Hole Area template showing placement of holes in the bottom of the enclosure for the digital input, telephone and power wiring. If you need to make holes for a printer cable or the output relay, these should also be in the bottom of the enclosure.

DiaLog is certified by the Canadian Standards Association (CSA). To meet CSA requirements, follow the wiring procedures on the CSA Warning Label on your unit.

We advise that you make your holes before you mount the unit, so that you can lay the template on the outside bottom of the case as indicated.

Open the door and the front panel of the unit before you start cutting, so that you have a better view of what you're doing. *Be careful: damage to DiaLog's electronics with a hole saw or drill bit is not covered under the warranty.* Be sure the holes are sized properly for the type of cord grip or conduit fitting you are using. The telephone cord grip fitting requires a 1/2" diameter hole.

Mount the unit using the four wall-mounting holes on the outside edge of the enclosure. Use mounting hardware appropriate for the type of wall surface, and be sure the hardware and the surface are strong enough to handle the weight of the unit (13 lbs).

Making the telephone connection

The RJ-11C telephone connector (P10 on Figure 1) is located at the bottom center of the board. Thread one end of the factory-supplied telephone cord through the appropriate hole. Leave enough cord so the connectors meet, but do not plug in yet. Place the fitting around the cord just below where the cord goes into the enclosure. Squeeze the fitting with pliers and snap it into the hole. Then insert the plug into Connector P10, and plug the other end of the cord into an RJ-11C telephone jack.

Connecting the digital inputs

Each digital input channel in DiaLog Plus is designed to monitor a Normally Open or Normally Closed relay.

Terminals for input channels 1-4 are located on Terminal Block 1 (P8 on Figure 1). The terminals are labeled at the right, in ascending order, with Channel 1+ at the bottom and Channel 4- at the top. If you purchased the eight-channel unit, you have a separate four-channel digital input board with Terminal Block 2 (P14 on Figure 1) immediately to the left of Terminal Block 1. Channel 5+ is at the bottom and Channel 8- is at the top.

Notice that each input channel has two terminals, + and -. We recommend that you use two wires for each input channel, to take advantage of DiaLog's superior isolation design. If you are monitoring four dry contact relays, bring in eight wires, as shown in Figure 2. Use cable tie-wraps to help prevent the wiring from pulling loose.

If it is not possible to use two wires for each input channel, you may bring one common (-) wire for all of the input channels into the Channel 1- terminal, and then loop (daisy-chain) the common (-) terminals together starting with Channel 1-. See Figure 3.

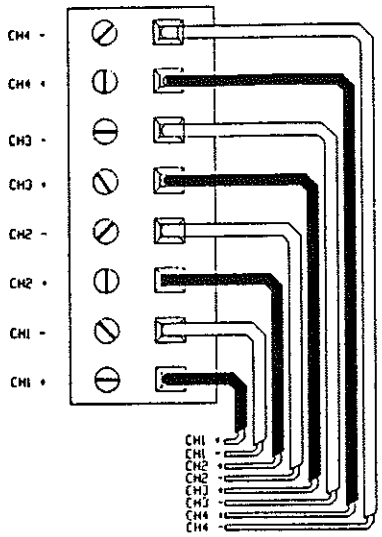

Figure 2. Preferred input wiring: two wires per channel

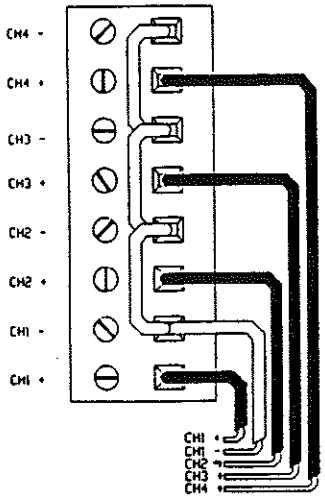

Figure 3. Alternative input wiring: common terminals daisy-chained together

Medium gauge wire (16 to 20 AWG) twisted pair such as Belden #8205 or equivalent is acceptable. You may instead choose to use 8-conductor cable (4-channel unit) or 16-conductor cable (8-channel unit), if all of your dry contact relays are in the same panel.

Total loop resistance for each digital input channel should not exceed 1,000 ohms; otherwise false alarms may occur or a channel may fail to alarm.

NOTE

If you wish to use open collector transistor or TTL logic inputs instead of dry contact relays, see Appendix B for circuit information.

Connecting the relay output to an external device (optional)

The relay output terminal block is located at the bottom of the board, right of center (P11 on Figure 1), By default, the relay automatically becomes energized (On) whenever any channel 0-8 is in an unacknowledged alarm state, but you can configure it as User Controlled (see Setup in Section 5, Programming). NOTE: When you set up the relay as User Controlled, it will energize *only* at the user's request. You can make the User Controlled relay User Latched or Time Latched, and set a duration for a Time Latch (see Channel Configuration in Section 5, Programming).

The relay output is rated at a maximum of 5 amps at 250 VAC or 5 amps at 30 VDC, non-inductive. If you are using an inductive load, see Appendix C for circuit information.

The relay output terminals are labeled left to right: C (Common), NO (Normally Open) and NC (Normally Closed). Route the wiring through a hole in the enclosure and connect your output wires to the appropriate terminals.

Selecting the AC power voltage

DiaLog Plus can operate on either 115 or 230 VAC. (If you are going to use an external DC power source instead of AC power, see the explanation of external DC operation below.)

Select 115 or 230 VAC with the AC voltage selector located on the right side of the board, above the AC terminal block (SW2 on Figure 1).

Connecting AC power

The AC terminal block is located at the bottom of the board, to the right of the relay output terminal (P12 on Figure 1).

Bring in your AC power cord or wiring. DiaLog is shipped with a ferrite bead for the power cable to provide optimum RF immunity. Leave enough cable on the inside of the enclosure to make one turn through the bead before you connect the wires to the terminal. See Figure 4.

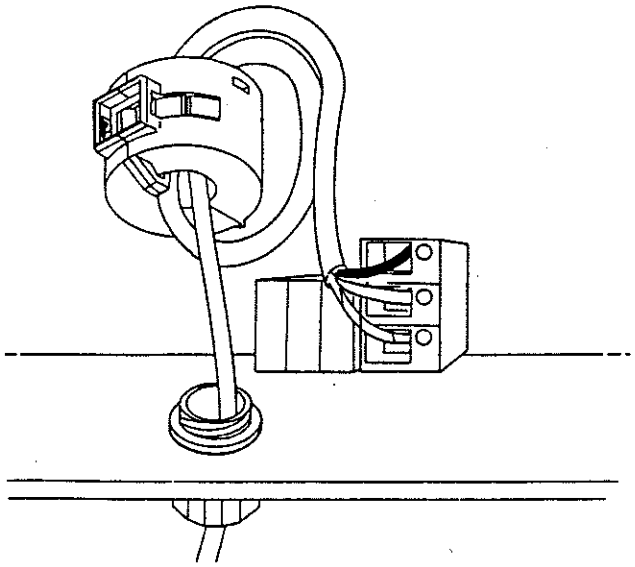

Figure 4. Ferrite bead installation

The terminal labels are to the right of the block, on the board: L=Line (black), N=Neutral (white), G=Ground (green).

Plug in or connect the other end of the AC cord or wiring to an AC power source, and turn the power switch ON. Check to make sure the AC POWER indicator on the front panel remains lit after the power-up diagnostic tests are complete.

CAUTION

Failure to supply a good earth ground for the AC power will cause DiaLog's integral surge and lightning protection to be ineffective.

External DC operation (optional)

For applications where standard AC power is not available, DiaLog Plus has a separate terminal for wiring to an external 12 VDC power source. The system operates in exactly the same way, whether primary power is AC or DC. See *Appendix A*, Specifications for power requirements.

The terminal is located near the bottom right corner of the backup battery (P6 in Figure 1). The negative and positive terminals are labeled on the board. Bring the external leads in through a hole in the enclosure and attach to the appropriate terminals.

To turn DiaLog Plus on, flip the power switch ON.

Adjusting the speaker volume

The speaker is located behind the grille at the bottom left of the front panel. The potentiometer for adjusting the speaker volume is just to the left of the speaker (RV1 on Figure 5). To increase the volume, turn the potentiometer clockwise. To decrease the volume, turn counterclockwise. Treat the potentiomenter with care so that its mounting wires do not bend.

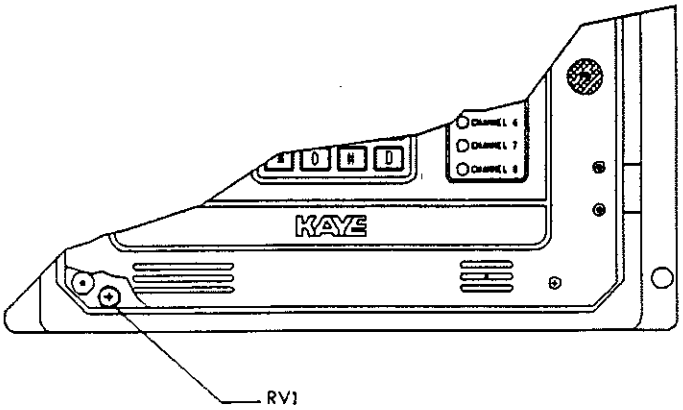

Figure 5. Speaker volume potentiometer

Connecting the printer (optional)

The 9-pin RS-232C serial port for connecting an optional printer or terminal is next to the bottom left corner of the backup battery (P2 on Figure 1). Make a hole in the enclosure the appropriate size for the printer cable.

The serial port is wired as Data Terminal Equipment (DTE). The cable pin assignments at the DiaLog are as follows:

Pin number	*Signal Description*
2	Receive Data
3	Transmit Data
4	Data Terminal Ready
5	Signal Ground
6	Data Set Ready
7	Request to Send

The printer port is factory set for 1200 baud, 8 data bits, no parity and 1 stop bit. Check your printer manual for its communication requirements. Then, if you need to program different values, select Setup and then Printer Port. See Section 5, *Programming* for more information.

Connecting the radio interface (optional)

If you ordered the optional radio interface, locate the radio relay terminal block (P5 in Figure 1). The terminals are numbered 1-8 from the bottom up. Connect Terminal 1 (Normally Open) and Terminal 2 (common) to the PTT switch on your radio transmitter.

Connect Terminals 5 and 6 to the radio transmitter microphone input. DiaLog's output signal is 0 DBM with 600Ω source impedance.

To program DiaLog Plus to transmit alarms over the radio, see Telephone Numbers in Section 5, *Programming*.

3. Quick Start

This section is designed with the majority of DiaLog Plus users in mind, and will work for you if:

- Your application is strictly alarm call-out.
- You want DiaLog to call out any time an alarm occurs, day or night. In other words, you want the system armed 24 hours a day.
- You need to call just one list of telephone numbers, no matter what alarm occurs.
- You need to call a maximum of 8 telephone numbers.
- You are not calling a display pager.

If your needs differ from the above, skip Quick Start and read Sections 4, 5 and 6.

All you need to program is one list of telephone numbers.

This section tells you how to program a list of telephone numbers. Once you have done this, DiaLog takes over alarm notification, using its factory settings. When an alarm occurs, any time of day or night, seven days a week, DiaLog calls the telephone numbers on the list, in sequential order, until it makes a connection. It delivers a factory-programmed alarm message and waits for an acknowledgement. If there is no acknowledgement, DiaLog calls the next number on the list.

Although you can use the factory-programmed alarm messages, most people want to record their own, so we include instructions on how to program a customized message for one channel. You can then use the instructions to record alarm messages for all your channels.

Also included here are an explanation of the front panel indicators and instructions for testing DiaLog to make sure it is calling out when an alarm occurs.

Front panel indicators

Table 1 lists and explains the LED's on the front panel.

Table 1. Front Panel LED's

Indicator	*Steady On*	*Blinking*
• AC POWER	Primary power On	Primary power lost
• BATTERY	System on battery backup	Power lost: battery low Power reapplied: battery charging
• OFF HOOK/RING	Incoming/outgoing call in progress	Incoming call ring
• PHONE FAULT	Line failure	---
• BYPASS/RUN	Run mode	Bypass mode
• CHANNEL 1-8	Acknowledged alarm	Unacknowledged alarm

AC POWER and BATTERY indicators

The AC POWER indicator blinks if DiaLog powers up and then loses primary power. The BATTERY indicator blinks if DiaLog has lost primary power, is running off the backup battery and the battery is low. The BATTERY indicator also blinks when primary power is restored after a power loss, and the battery is charging.

BYPASS/RUN

DiaLog has two modes: Bypass and Run. Bypass mode is for programming and certain other tasks, while Run is the normal operating mode. Press 1 on the front panel for Bypass, and 2 for Run mode.

When you first power up, the system is in Bypass mode. The BYPASS/RUN indicator is blinking and DiaLog prompts, "This is DiaLog Plus [firmware version number]. Please wait. Memory cleared. Setup. Enter Setup selection." Since you will not be entering any Setup selections, press HOME for the "System ready; enter selection" prompt.

After you finish programming, or if you take a break in a programming session, press 2 to put DiaLog into Run mode. DiaLog Plus responds, "Run mode. Please wait." There is a delay while the system stores your program changes, and then you hear "Run mode activated. System ready." In Run mode, the BYPASS/RUN indicator is steady On.

The system must be in Run mode in order to make alarm calls. Also, your programming, with the exception of messages, is not saved until DiaLog goes from Bypass to Run.

CHANNEL alarm indicators

The red Channel indicators light when a channel is in alarm/On. Blinking indicates an unacknowledged alarm, while steady On indicates an alarm that is acknowledged but not corrected.

Programming telephone numbers

DiaLog Plus can hold up to 64 telephone numbers: 8 lists of 8 or 4 lists of 16. Your system is factory-set for 8 lists of 8. The following instructions tell you how to program a telephone number in Telephone List 1, Position 1. When an alarm occurs, DiaLog Plus will call that number first.

At the "System ready; enter selection" prompt, follow the sequence below.

What you enter	*What DiaLog Says*
6 (System Configuration)	**"System configuration.** Enter System selection."
3 (Telephone Numbers)	**"Telephone Numbers.** Enter List Number or press Pound (#) to exit."
1	**"Telephone List 1.** Enter List Position. "
1	**"Telephone List 1, Position 1.** The present number is disabled. Enter new telephone number or press Pound (#) if OK."
A telephone number of up to 35 digits or special characters (see Section 5, page 40 for special characters); then ENTER	"The new number is _____."
	"Telephone List 1. Enter List Position."
	(DiaLog prompts you to enter up to 8 telephone numbers in List 1, Positions 1-8. You can exit the Telephone Numbers selection at any time by pressing HOME, as shown below.)
HOME	"System ready. Enter selection."

If this is all the programming you plan to do, press 2 to save your entries and put the system into Run mode.

Programming an alarm message (optional)

When any input channel goes into alarm, DiaLog Plus calls the number you entered in Telephone List 1, Position 1 and delivers a factory-programmed message. However, you can record your own alarm messages. These instructions tell you how to record a message for Channel 1, the first digital input.

DiaLog's microphone is located behind the grille on the bottom right of the front panel. It turns on automatically when the tone prompt sounds, and turns off at the end of the recording period. Speak clearly about 6" from the microphone.

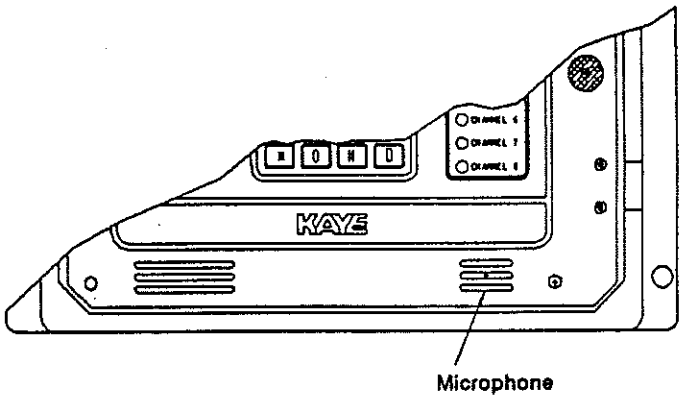

Unlike other program changes, your customized messages are saved as you record them. When you finish, you hear a "Please wait" prompt, which indicates that DiaLog Plus is saving the message into memory. Your message is repeated back, and then you are prompted again to enter a channel selection. Since you will not be programming other parameters, ignore this prompt.

At the "System ready; enter selection" prompt, follow the sequence below.

What you enter	*What DiaLog Says*
9 (Channel Configuration)	**"Channel configuration.** Enter channel number."
1	**"Channel 1, Digital Input.** Enter channel selection."
1 (Channel Messages)	**"Channel Messages.** The present selection is one 8-second message. Enter new selection or press Pound (#) if OK."
#	**"8-second Alarm or On message.** The present message is 'Channel 1, Digital Input, is in alarm.' Press Pound (#) if OK or 1 to record new message at the tone."

1	(Tone sounds.)
Speak your message into the microphone.	(Tone sounds.) "Please wait."
	"The new message is _____."
	"Channel 1, Digital Input. Enter channel selection."
HOME	"System ready. Enter selection."

Press 2 when you finish programming to put DiaLog into Run mode.

Testing the system

This test assumes that DiaLog has primary power, is connected to the phone system, has a digital input wired into Channel 1+ and 1- on the I/O board, and none of the CHANNEL indicators are on.

To make sure DiaLog is working, force Channel 1 into alarm. Verify that the system is in Run mode (RUN/BYPASS indicator steady ON) and check for the following:

- The CHANNEL 1 Alarm Indicator on the operator panel is blinking.
- The red OFF HOOK/RING indicator is lit to show that the system is attempting to dial the first telephone number on List 1.

To acknowledge the alarm at the operator panel, press ACK. The red channel indicator goes from blinking (unacknowledged alarm) to steady ON (alarm acknowledged but not corrected).

Complete the test by correcting the alarm at Channel 1.

For more information

To learn about how DiaLog Plus operates and what it can do for you, turn to Section 4, *How DiaLog Plus Works.*

To change the factory settings, turn to Section 5, *Programming.*

To learn how to acknowledge an alarm, cancel an alarm call-out, request a Status Report, switch modes from Run to Bypass, make outgoing calls, listen in to activity near the system, and print configuration reports, turn to Section 6, *Using DiaLog Plus.*

4. How DiaLog Plus Works

This section of the User's Guide gives you an overview of how DiaLog Plus operates. The description assumes the system is running with its factory settings, except for the telephone numbers you programmed into List 1 in *Quick Start*. The factory settings are listed in Table 2 at the end of this section.

Where applicable, we describe programming changes you can make to customize the way DiaLog Plus works.

Italicized terms in the text are defined fully in Section 5, *Programming* and in the Glossary.

What is DiaLog Plus?

There are two versions of DiaLog Plus: 8-input and 4-input. Each input is associated with a channel. DiaLog continuously monitors all input channels as well as Channel 0, its primary power (AC or external 12 VDC). If an alarm condition or a power failure occurs, the system sends a factory-programmed voice message over standard telephone lines and alerts you to the problem. You can record your own customized *System Identification Message* and *Channel Alarm Messages*.

The system also has one relay output that you can connect to an external siren, beacon or other device. When an alarm occurs, DiaLog Plus automatically energizes the relay, turning on your external device. Alternatively, you can program this relay for user control and turn it on and off from a remote telephone or the front panel. When set up for user control, the relay output is associated with Channel 9.

Programming

The system has two modes: *Bypass* mode for programming and *Run* mode for normal operation. (DiaLog Plus must be in Run mode to make alarm callouts, and any programming you do is not saved until you put it into Run mode.) In Bypass mode, the RUN/BYPASS indicator on the front panel blinks, while in Run mode the indicator is steady On.

DiaLog Plus powers up in Bypass mode and prompts for a programming selection. If there is an *Access Code* (password) programmed, you must enter the code before you can enter a programming selection.

You can program the system through the built-in keypad or from a remote Touch-Tone™ telephone. Voice prompts guide you through the programming.

At a minimum, you must program DiaLog Plus with at least one telephone number. DiaLog calls that number when an alarm occurs. The number can be a paging device.

When you finish programming, press 2 to put DiaLog into Run mode. If you overlook this step, the system automatically switches into Run mode after a 60-minute *Bypass to Run Delay*, ensuring that DiaLog is not inadvertently left in a nonfunctioning state. You can program a shorter or longer Bypass to Run Delay period.

At the switch to Run mode, the system says "Please wait" as it stores programming changes to memory, and then "Run mode activated."

Alarm notification

DiaLog Plus digital input *Channel States* are factory set as Normally Open. If you want, you can change individual channels to Normally Closed. When a Channel State changes from normal or a power failure occurs, DiaLog waits for a 3-second *Alarm Delay* period to make sure the channel is actually in alarm, and then begins alarm call-outs. You can change the length of the Alarm Delay period.

The front panel alarm indicator for the channel in alarm begins to blink and the OFF HOOK/RING indicator goes steady On.

Individually targeted alarm destinations

DiaLog Plus automatically dials the first number on *Telephone List* 1, although you can program the system to dial a different list of numbers. You can program up to 8 lists of 8 numbers, or 4 lists of 16 numbers, and assign each digital input channel to any one of the lists. This way, you can target alarms to specific destinations. For example, you can direct cooling and heating failures to your mechanics, hazardous material leakage to emergency teams, and intrusion alarms to security.

Alarms are prioritized by their Telephone List number, with List 1 the highest and List 8 the lowest.

DiaLog rings the first number on the Telephone List for up to 30 seconds. If the line is busy or the telephone is not answered during the 30-second period, the system dials the second number. It repeats this sequence until someone answers. If you want DiaLog to call back a busy number, you can enable the *Redial Number* feature. Then the system will try a number twice before it moves on to the next number on the list.

When the call is answered, DiaLog identifies itself, delivers the message for the channel in alarm, and says "Please acknowledge." It repeats this sequence three times. You can change the number of *Message Repeats*.

Alarm response

The person answering the call acknowledges it by pressing the *, 8 or 9 key on a Touch-Tone telephone within 5 seconds after Dialog requests an acknowledgement.

DiaLog will accept a return call as an acknowledgement of all alarms if you enable the *Call In Acknowledge* feature. The call must come during the 30-second *Between Calls Delay,* or DiaLog calls the next number on the list. You can increase or decrease the Between Calls Delay period.

If an alarm clears during the Between Calls Delay, the call-out sequence for that alarm is automatically cancelled.

Once an acknowledgement is received, DiaLog goes into a 60-minute *Redial After Acknowledge Delay*. This delay can be increased or decreased. If the alarm is not cleared by the end of this period, DiaLog repeats the calling sequence.

If a channel with a higher alarm priority goes into alarm during a call-out, the lower priority call sequence is interrupted within 10 seconds after DiaLog terminates the current call. When DiaLog gets an acknowledgement of the higher priority alarm, it restarts the calling sequence for the lower priority alarm. If channels with the same priority are in alarm at the same time, DiaLog Plus delivers the alarm messages for all these channels. The system automatically updates its messages during a notification call to reflect a new alarm.

Disarmed timetable

Because DiaLog Plus has a built-in clock, you can set up a *Disarmed/Armed Schedule* that automatically disables alarm call-outs during certain times of the day. This is useful for locations that are staffed on weekdays but unattended in the evenings and during the weekend. For example, you can program DiaLog Plus to disarm itself Monday through Friday from 8:00 A.M. to 5:00 P.M. while your site is staffed, and then automatically arm itself from 5:00 P.M. to 8:00 A.M., and round the clock Saturdays, Sundays and holidays. You can also program a *Holiday Calendar*, assigning holiday status to up to 20 days in a year.

Flexible notification

All input channels are factory-set to call out on alarm, but you can change the *Channel Mode* of any channel. For instance, you can temporarily disable a channel that is monitoring equipment under repair, so the channel does not trigger alarm calls and is not included in a status report. Or, you can designate a channel Status Only, so you can call in to find out whether it is On or Off but it does not make alarm notifications.

Alternatively, you can program a channel to call out when a Limit is reached. You set the *Channel Limits* for the two counters associated with each channel: the *Totalizer*, which counts the number of times the channel goes into the On state, and the *Duration Counter*, which keeps track of how long the channel stays in an On state. The *Counter Resets* feature lets you do a real-time manual reset of the Totalizer and Duration Counters.

Answering machines

We recommend you do not use an answering machine to receive alarm or status notification calls, since DiaLog may misinterpret tones in the answering machine's recorded message or the tone following the message.

Status reports

You can call DiaLog Plus anytime and find out the current system status as well as the status of a specific input channel or all input channels. This virtually eliminates routine inspection trips to unattended sites or remote areas of large facilities.

DiaLog is factory-set to wait for two rings before it answers a call. However, if the system shares a telephone line, you can increase the *Ring Count* to make sure that an employee has time to answer before DiaLog picks up the call.

Status call-outs

You can program DiaLog to make *Status Notification* calls up to 4 times a day, weekdays, weekends and holidays, with a system status report.

Listen In

You can also call and *Listen In* to nearby noises picked up by DiaLog's internal microphone. For example, you can call in and determine if a pump is running or the chiller is operating. You can adjust the *Microphone Level* with a programming command.

Hard copy documentation

You can attach a serial printer to the RS-232 port for a printout of events at the unit. The printout identifies each alarm, when it occurred, and the telephone numbers DiaLog attempted to call. It also indicates the results of the call, such as busy signal, no answer or alarm acknowledged. In addition, the printer logs calls answered by DiaLog Plus, any changes made to the program (except for Setup parameters), and mode changes (BYPASS to RUN or vice versa). All events are stamped with the date and time. DiaLog Plus is factory-set for U.S. *Date Format* and 24-hour *Time Format*, but you can select from five date formats and choose a 12-hour clock. You can also reconfigure the *Printer Port* with a few keystrokes.

DiaLog Plus has a printer buffer that can store the most recent 14 to 16 events in memory. When the printer is connected or powered on, the events are printed. Instead of a printer, you can connect a terminal to the RS-232 port and monitor DiaLog's activities on screen.

DiaLog Plus can also print a complete summary of all configured parameters, or partial summaries of specified parameters. In addition, you can request a State Change List, which is a record of the 50 most recent channel state changes (for example, Normal to Alarm or Off to On).

Automatic battery backup

The standard 6 VDC internal backup battery maintains operating power to DiaLog Plus for a minimum of 16 hours at 86°F in the event of primary power loss. The switch-over to battery operation is automatic; no operator intervention or reprogramming is required. An alarm notification call alerts the first available person on Telephone List 1 with the message, " Channel 0 is in alarm; system on battery backup." The POWER indicator on the front panel goes off and the BATTERY indicator goes steady On.

If the battery charge drops below a certain level, the message "System battery is low" is delivered in the System Status report, and the BATTERY indicator blinks. See Appendix L for the battery test procedure and estimated power fail reserve capacity.

While primary power is available, the BATTERY indicator blinks at the normal blink rate when the internal battery is charging. The battery will recharge as long as primary power is connected, even if the power switch is Off. The standard factory-installed battery requires 20 hours to recharge completely; the optional extended backup battery takes approximately 33 hours to recharge.

If the battery fails to take a charge while the system is operating from primary power, the System Status report includes the message, "System battery is bad." When you hear this message, we strongly recommend that you replace the battery. The message may indicate a blown battery fuse instead of a bad battery. Check the fuse (F1 on the main board).

While all user-programmed messages and parameters are saved permanently in nonvolatile memory, if you turn the power switch off (for example, to install an expansion board), or if there is a power loss *and* DiaLog's backup battery has no charge, the date and time will be reset to January 1, 1990 and 0 hours, 0 minutes, totalizer and duration counters will be reset to 0, and any stored printer and state change messages will be lost.

Local telephone communications

Because DiaLog contains a speaker and microphone, an operator at the site can use it as a speaker phone, dialing out manually and speaking normally into the microphone.

DiaLog Plus automatically detects voice activity at one end of the line or the other, and gives the current speaker the line. At the front panel, either the speaker or the microphone is activated, but not both at the same time.

Telephone line test

DiaLog Plus tests the phone line every two hours. The OFF HOOK indicator lights as the system checks for a dial tone. If DiaLog does not detect a dial tone, it lights the PHONE FAULT indicator.

For more information

Turn to Section 5, *Programming* for instructions on changing the DiaLog Plus factory settings. You do not have to program all the parameters; you may want to leave most of the settings alone and just program a few more telephone numbers and messages. In this case, the Quick Start directions may be adequate.

Section 6, *Using DiaLog Plus*, tells you how to acknowledge alarms, cancel an alarm call-out, request a Status Report, switch modes from Run to Bypass and vice versa, make outgoing calls, listen in to activity near the system, print configuration reports, and do a manual reset of the channel counters.

Table 2. DiaLog Plus Factory Settings

Date and Time format	mm/dd/yy (U.S.); 24-hour clock
Telephone Lists	8 lists of 8 numbers
Call In Acknowledge	Disabled
Redial Number	Disabled
Printer Port	1200 baud, 8 data bits, parity disabled, 1 stop bit
Relay Output	Alarm
Audio Settings	Speaker On; Microphone level 5
System ID message; number	"This is DiaLog Plus"; 1
Date and Time	01/01/90; 00:00:00
Access Code (password)	Disabled
Telephone Numbers	Disabled
Message Repeat	3
Ring Count	2
Delays	Bypass/Run - 60 minutes Between Calls - 30 seconds Redial After Acknowledge - 60 minutes
Status Notification	No entries
Disarmed/Armed schedule	Disabled (always armed)
Holiday Calendar	No entries
Channels	
Channel State (DI only)	Normally Open
Channel Messages (DI only)	Alarm/On: "Channel n is in alarm." Normal/Off: "Channel n is normal."
Channel Mode (DI, PF)	Call on Alarm
Continue notification if Return to Normal before Acknowledge	Disabled
Channel Telephone List (DI, PF)	List 1 (Highest priority)
Channel Alarm Delay (DI, PF)	3 seconds
Channel Limits (DI, PF)	Totalizer: 65535; Duration counter: 120 minutes
Output Type (RO only)	User latched

DI - Digital Input
PF - Power Fail
RO - Relay Output

5. Programming DiaLog Plus

This section of the User's Guide describes the front panel keypad and the equivalent key sequences at a remote telephone. It provides general programming guidelines and tips, and step-by-step instructions for programming each DiaLog Plus feature. Programming forms are included at the end of the section.

Keys

You can program DiaLog Plus either through the front panel keypad or from a remote Touch-Tone telephone.

Remote programming

When you call DiaLog, you hear a System Status report followed by three beeps. Wait for all three beeps to sound, then press # (ENTER). Press 1 (BYPASS) at the "System ready" prompt to begin programming.

Front panel keypad

The front panel keypad includes five shortcut keys to speed up programming: ENTER, BKSP, CLEAR, RESET, and HOME. In addition, the ACK key acknowledges all channels in alarm, and the MIC key lets you adjust the microphone pickup levels. You can perform the same functions at a remote telephone using combinations of the standard 12 keys. When you use * (Star) with another key, hold down * while you press the numeric key.

Keypad	*Remote*	*Function*
ACK	* or 8 or 9	RUN Mode: Acknowledge all channels in alarm.
ENTER	#	REMOTE TELEPHONE: Begin programming Retain present entry; enter data (not required with max. entry)
BKSP	* 0	Delete previous character. Low beep indicates entry is cleared.
CLEAR	* 1	Clear keystrokes.
RESET	* 2	Cancel entry and restore factory setting.
HOME	* 6	Cancel, retain present entry, and exit to "System ready" prompt. RUN Mode: Cancel alarm callouts.
▲ Mic ▼	4	Increase or decrease microphone level.

Figure 6. Front Panel Shortcut Keys

Entering data and editing

The shortcut programming keys and their remote equivalents are used for entering data and editing entries. For instance:

- Press ENTER or Pound (#) immediately after a "Press Pound (#) if OK" prompt to retain the present value in a parameter.
- Press ENTER or Pound (#) to terminate a numerical entry such as a telephone number, delay, or limit, when you enter fewer than the maximum number of digits.
- Press HOME (*6) to cancel an entry and exit to the "System ready. Enter selection" prompt.
- Press RESET (*2) at the "Enter new selection" prompt to restore the factory setting and return to the previous prompt.
- Press RESET (*2) at the "Channel *n*. Enter channel selection" prompt to deselect the channel and exit to the "Enter channel number" prompt.
- Press CLEAR (*1) in the middle of an entry to clear the keystrokes and return to the current prompt.
- Press BKSP (*0) to delete the previous character. A low beep tells you when the entire entry is cleared.

The front panel keys A, B, C and D represent the last four, rarely-used DTMF tones. You may find these useful in some radio transmission applications.

With the exception of the shortcut and A-D keys, and the requirement that you press # (ENTER) to start programming from a remote phone, DiaLog Plus programming is identical both at the front panel and from remote telephones. Table 3 shows all the programming selections, organized into four main areas:
Setup (3)
Audio Settings (4)
System Configuration (6)
Channel Configuration (9)

Working your way through the programming selections

You select an area, then make selections within the area. For example, press 3 to select Setup, then any key 0-4 for a Setup selection. When you finish programming a selection, you are still in the Setup area, and DiaLog prompts you to make another Setup selection. You do not have to press 3 again to select Setup; if you do press 3, you will hear the "Redial Number" prompt.

This section describes only the programming selections. The keys used for day-to-day operation of the system, such as ACK (*), Status (0), Bypass (1), Run (2), Call Out/Listen In (5) and Print Report (8) are discussed in Section 6, *Using DiaLog Plus*.

Voice Prompts

When you power up for the first time or after clearing the memory, DiaLog Plus responds with "This is DiaLog Plus. Please wait. Memory cleared. Setup. Enter Setup selection." If you do not want to enter Setup parameters, press HOME (*6) for the "System ready" prompt.

Table 3. DiaLog Plus Programming Selections

Keys	Selection	Factory setting
HOME then	0 System Status	
	n Single channel	
	* * All channels	
HOME then	1 Bypass mode	Bypass mode at power up.
HOME then	2 Run mode	
HOME then	3 Setup	
	0 ▸ Date/Time Format	0(mm/dd/yy)
	0 mm/dd/yy hh:mm:ss	
	1 yy-mm-dd hh:mm:ss	
	2 dd.mm.yy hh.mm.ss	
	3 dd/mm/yy hh:mm:ss	
	4 dd mm yy hh:mm:ss	
	▸ Clock Format	0 (24-hour)
	0 24-hour	
	1 12-hour	
	1 Telephone Lists	0 (8 lists of 8)
	0 8 lists of 8	
	1 4 lists of 16	
	2 Call In Acknowledge	0 (Disabled)
	0 Disabled	
	1 Enabled	
	3 Redial Number	0 (Disabled)
	0 Disabled	
	1 Enabled	
	4 Printer Port	
	▸ Baud rate	1 (1200 baud)
	0 300	
	1 1200	
	2 2400	
	1 9600	
	▸ Data bits	1 (8 data bits)
	0 7 bits	
	1 8 bits	
	▸ Parity	0 (Disabled)
	0 Dsab	
	1 Odd	
	2 Even	
	▸ Stop bits	0 (1 stop bit)
	0 1 bit	
	1 2 bits	
	5 Relay Output	0 (Alarm)
	0 Alarm	
	1 User Controlled	
	6 Firmware version	
HOME then	4 Audio Settings	
	▸ Speaker	1 (On)
	0 Off	
	1 On	
	▸ Microphone level	5
	0 Minimum . . . to	
	7 Maximum	

Table 3. DiaLog Plus Programming Selections, continued

Keys	Selection	Factory setting
HOME then	5 **Speaker Phone/Listen In**	
HOME then	6 **System Configuration**	
0	System Identification	
	▸ 8-second voice message	"This is DiaLog Plus."
	▸ 18 characters, 0-9, A-D, * and #	(1)
1	Date and Time	
	▸ yy/mm/dd	90/01/01
	▸ hh:mm:ss	00:00:00
2	Access Code, 4 digits	0000
3	Telephone Numbers	Disabled
	▸ List 1-8 (or 1-4)	
	▸ List Position 1-8 (or 1-16)	
	▸ Telephone number, up to 35 digits 0-9 and special characters:	
	* 3 Modem communication (M)	* * * tone (*)
	* 5 Radio transmission (K)	* # # tone (#)
	* 7 Pager (P)	A A tone (A)
	* 8 Dial tone detect (T)	B B tone (B)
	* 9 2-second delay (W)	C C tone (C)
	D D tone (D)	
4	Message Repeat 1-20	(3)
5	Ring Count 1-20	(2)
6	Delays	
	▸ Bypass to Run, 0-999 minutes	60 minutes
	▸ Between Calls, 10-9999 seconds	30 seconds
	▸ Redial After Acknowledge, 1-9999 minutes	60 minutes
7	Status Notification (7 days plus holiday)	No entries
	▸ Day 1-8	
	▸ Telephone List 1-8 (or 1-4)	
	▸ Up to 4 notification times, hh/mm	
8	Disarmed/Armed (7 days plus holiday)	Disabled
	▸ Day 1-8	
	▸ Disarmed time, hh/mm	
	▸ Armed time, hh/mm	
9	Holiday Calendar, 20 dates, mm/dd	No entries

Table 3. DiaLog Plus Programming Selections, continued

Keys	Selection	Factory setting
HOME then	**8 Print Configuration Report**	
	0 Setup	
	1 System Configuration	
	2 Channel Configuration	
	n Single channel	
	* * All channels	
	3 Telephone Lists	
	4 State Change List	
	5 Reset State Change List	
HOME then	**9 Channel Configuration**	
	▸ **Channel number**	
	* 4 Global (enter this command *after* a channel selection)	
	0 Channel State (DI only)	Normally Open
	0 Normally Open 1 Normally Closed	
	1 Channel Messages (DI only)	"Channel *n* is in alarm."
	0 One 8-second alarm message	
	1 Two 4-second messages	
	2 Channel Mode (DI and PF)	Call on Alarm
	0 Disabled	
	1 Status Only	
	2 Call on Alarm	
	▸ Continue notification if normal	Disabled
	0 Disabled 1 Enabled	
	3 Call on Limit	
	3 Telephone List 1-8 (or 1-4) (DI and PF)	1
	4 Alarm Delay, 1-999 seconds (DI and PF)	3 seconds
	5 Limits (DI and PF)	
	▸ Totalizer Limit, 0-65535	65535
	▸ Duration Limit, 0-65535 minutes	120 minutes
	6 Resets (DI and PF)	
	▸ Totalizer reset, 0-65535	
	▸ Duration reset, 0-65535 minutes	
	7 Output Type (RO only)	User Latched
	0 User latched	
	1 Time latched	
	▸ Latch duration, 01-99 seconds	1 second
	8 Change State (RO only)	Off
	0 Off 1 On	

Step-by-step help

As you enter keystrokes, DiaLog Plus prompts you at each step, confirming your entry, stating the present selection, and cueing your next entry. At the front panel, you can interrupt the prompt by entering a valid keystroke. At a remote telephone, wait until DiaLog stops speaking before you make an entry.

If you press an incorrect key during an entry, DiaLog Plus prompts, "Invalid keystroke." You can either continue the programming sequence or exit with HOME or *6. If you make an incorrect entry, you are prompted, "Invalid entry." Re-enter the parameter. DiaLog also delivers voice messages when it goes from Run to Bypass mode or vice versa, requires programming for a new holiday calendar, or terminates a call. After you record a message and when you go into Run mode, you hear "Please wait" while the system processes and stores your message or program into nonvolatile memory.

Getting ready to program

Plan the program before you begin.

We recommend that before you begin, you write out your program, including your customized messages, the lists of telephone numbers, and the telephone priority for each channel. A written program can help you quickly pick up where you left off if you are interrupted. Use the programming forms at the end of this section (before you write, make copies of the forms for future use).

Activate Bypass mode to program.

When you are ready, press 1 (BYPASS) at the front panel to put DiaLog Plus into Bypass mode for programming. Enter the access code if required. DiaLog Plus responds, "Bypass mode activated. System ready."

From a remote Touch-Tone telephone, dial DiaLog's number. After the System Status message and the three beeps, press # (ENTER), then 1 (BYPASS) to program. Enter the access code if required.

Press HOME for the "System ready" prompt.

If you are interrupted in the middle of a programming sequence and cannot remember where you were, press HOME to cancel the entry and start again. DiaLog automatically returns to the "System ready; enter selection" prompt if there is a pause of 5 minutes during a programming session. Any time you hear that prompt, you can select one of the main programming areas: Setup (3), Audio Settings (4), System Configuration (6) or Channel Configuration (9).

Checking your entries

To verify what you have entered, just re-select the parameter. DiaLog Plus states the present value or selection. All you have to do is press ENTER or Pound (#) at the "Press Pound (#) if OK" prompt.

3 Setup

Generally speaking, the Setup parameters are a one-time task. Set these parameters first, because they affect the way other parameters are programmed.

You automatically hear the "Setup. Enter Setup selection" prompt when you power up DiaLog Plus for the first time or if you do a Memory Clear (see Section 2, Installation). When you power up an already programmed DiaLog system, you are automatically in Bypass mode; at the "System ready. Enter selection" prompt, press 3 (Setup) and enter the desired selection. Table 4 summarizes the Setup parameters.

Table 4. Setup

Key	*Selection*	
3	SETUP	
	0	▸ Date/Time Format
		▸ Clock Format
	1	Telephone Lists
	2	Call In Acknowledge
	3	Redial Number
	4	Printer Port
		▸ Baud rate
		▸ Data bits
		▸ Parity
		▸ Stop bits
	5	Relay Output
	6	Firmware version

Setup parameters are not logged to an optional printer. For a hard copy, print a configuration report of the Setup selections.

The examples that follow assume you are in the Setup area.

0 Date/Time and Clock Format

This selection lets you pick one of five international date and time formats and choose a 24-hour or 12-hour clock. Your selections determine the way the date and time are spoken and printed.

NOTE

To program the current date and time, see System Configuration (6), Date and Time (1).

The factory settings for Date/Time and Clock Format are mm/dd/yy, hh:mm:ss (US), and 24-hour.

What you enter	*What DiaLog says*
0 (Date/Time and Clock)	**"Date and Time format.** The present selection is 0. Enter new selection or press Pound (#) if OK."
0 - mm/dd/yy hh:mm:ss 1 - yy-mm-dd hh:mm:ss 2 - dd.mm.yy hh.mm.ss 3 - dd/mm/yy hh:mm:ss 4 - dd mm yy hh:mm:ss	"The new selection is __."
	"Clock format. The present selection is 24-hour. Enter new selection or press Pound (#) if OK."
0 - 24-hour 1 - 12-hour	"The new selection is __-hour."
	"Setup. Enter Setup selection."

1 Telephone Lists

This selection lets you specify the number of telephone lists. The choices are 8 lists of 8 numbers or 4 lists of 16 numbers.

Channel alarm priority is determined by the telephone list assigned to the channel. List 1 always has the highest priority, with priority going down as the list number goes up.

The number of alarm priorities in the system depends on the number of lists. If you choose 8 lists, you can assign a priority of 1 to 8 to each of the input channels; 4 lists lets you assign a priority of 1 to 4.

The factory setting is 8 lists of 8 numbers.

What you enter	*What DiaLog says*
1 (Telephone Lists)	**"Telephone lists.** The present selection is 8 lists. Enter new selection or press Pound (#) if OK."
0 - 8 lists of 8 numbers 1 - 4 lists of 16 numbers	"The new selection is _ lists."
	"Setup. Enter Setup selection."

2 Call In Acknowledge

If this feature is enabled, DiaLog will accept a call during the Between Calls Delay as an alarm acknowledgement.

The advantage of enabling Call In Acknowledge is that a person who receives alarm notification via a pager can call in an acknowledgement. Also, a person with a rotary dial telephone can call back to acknowledge an alarm.

The disadvantage of enabling Call In Acknowledge is that a stray call can accidentally acknowledge all alarms. For example, someone might call in during the Between Calls Delay to check system status or to listen in, and DiaLog Plus would interpret the call as an alarm acknowledgement.

The factory setting for Call In Acknowledge is Disabled.

What you enter	*What DiaLog says*
2 (Call In Acknowledge)	**"Call In Acknowledge.** The present selection is Disabled. Enter new selection or press Pound (#) if OK."
0 - Disabled 1 - Enabled	"The new selection is _____."
	"Setup. Enter Setup selection."

3 Redial Number

This selection lets you specify whether or not the system will immediately redial a busy number.

When Redial Number is enabled, if DiaLog Plus encounters a busy signal during the callout, it waits for the Between Calls Delay period and then redials the number. If the line is still busy, DiaLog Plus does not try again; it automatically calls the next number on the list.

The advantage of enabling Redial Number is that DiaLog Plus has two chances to reach each person on the list. The disadvantage of enabling this feature is that time may be lost in responding to an alarm situation.

The factory setting for Redial Number is Disabled.

What you enter	*What DiaLog says*
3 (Redial Number)	"**Redial Number.** The present selection is Disabled. Enter new selection or press Pound (#) if OK."
0 - Disabled 1 - Enabled	"The new selection is _____."
	"**Setup.** Enter Setup selection."

4 Printer Port

This selection lets you specify Baud Rate, Data Bits, Parity and Stop Bits for the DiaLog Plus printer port. Consult your printer manual for the communications settings required for your printer.

The factory settings are 1200 baud, 8 data bits, no parity (disabled), and 1 stop bit.

What you enter	*What DiaLog says*
4 (Printer port)	"**Printer port. Baud rate.** The present selection is 1200. Enter new selection or press Pound (#) if OK."
0 - 300 1 - 1200 (factory setting) 2 - 2400 3 - 9600	"The new selection is ____."
	"**Data Bits.** The present selection is 8 data bits. Enter new selection or press Pound (#) if OK."
0 - 7 data bits 1 - 8 data bits (factory setting)	"The new selection is _ data bits."
	"**Parity.** The present selection is Disabled. Enter new selection or press Pound (#) if OK."
0 - Disabled (factory setting) 1 - Odd 2 - Even	"The new selection is ____."
	"**Stop bits.** The present selection is 1 stop bit. Enter new selection or press Pound (#) if OK."
0 - 1 stop bit (factory setting) 1 - 2 stop bits	"The new selection is _ stop bits."
	"**Setup.** Enter Setup selection."

5 Relay Output

This selection lets you change the Relay Output from automatic activation whenever a channel goes into alarm, to User Controlled activation. NOTE: The relay must be *either* automatic or user controlled; it cannot be both.

When the relay output is set up as User Controlled, it is identified as Channel 9. Channel Configuration commands 7 and 8 let you program the relay as User Latched or Time Latched, and manually change the relay's state (see Channel Configuration commands). If you make the relay Time Latched, you set a time duration.

What you enter	*What DiaLog says*
5 (Relay Output)	"Relay Output. The present selection is Alarm. Enter new selection or press Pound (#) if OK."
0 - Alarm 1 - User Controlled ☎	"The new selection is User Controlled."
	"Setup. Enter Setup selection."

6 Firmware version

This selection gives you the current firmware level and immediately returns you to the "Setup. Enter Setup selection" prompt.

4 Audio Settings

Use the Audio Settings selection to turn the speaker on or off and adjust the microphone levels from a remote phone. At the front panel, you can adjust the microphone with the MIC shortcut key.

The Speaker is always On in Bypass mode, so you can always hear programming prompts and always use the system as a telephone. However, if you are using DiaLog Plus as a security monitoring system, you may want to program the speaker Off when it is in Run mode.

The microphone pickup level is factory set to 5. You may find you want to adjust it for recording messages and listening in over the telephone.

When you finish programming the microphone level, DiaLog Plus returns to the "System ready" prompt.

What you enter	*What DiaLog says*
4 (Audio Settings)	**"Audio settings. Speaker.** The present selection is On. Enter new selection or press Pound (#) if OK."
0 - Speaker OFF 1 - Speaker ON	"The new selection is ___."
	"Microphone level. The present level is 5. Enter new level or press Pound (#) if OK."
0 - Lowest . . . 7 - Highest	"The new level is _."
	"System ready. Enter selection."

6 System Configuration

This selection lets you set the system-wide parameters listed in Table 5.

Table 5. System Configuration

Key	*Selection*
6	SYSTEM CONFIGURATION
	0 System Identification ▸ Identification Message ▸ Identification Number
	1 Date and Time ▸ yy/mm/dd ▸ hh:mm:ss
	2 Access Code
	3 Telephone Numbers ▸ List 1-8 (or 1-4) ▸ List position 1-8 (or 1-16) ▸ Telephone number
	4 Message Repeat
	5 Ring Count
	6 Delays ▸ Bypass to Run ▸ Between Calls ▸ Redial after Acknowledge
	7 Status Notification
	* 4 Global (apply to current and subsequent days) ▸ Day 1-8 ▸ Telephone List 1-8 ▸ Up to 4 notification times
	8 Disarmed/Armed Schedule
	* 4 Global (apply to current and subsequent days) ▸ Day 1-8 ▸ Disarmed time ▸ Armed time
	9 Holiday Calendar

Global programming

With the Status Notification and Disarmed/Armed selections, you can press *4 (Global) to apply your entries not only to the selected day but also to all successive days. This speeds up and simplifies programming.

Global mode is enabled for one parameter only. For example, if you are programming Status Notification for Sunday and you press *4 (Global) at the Telephone List prompt, the List number is applied to all days of the week including holidays (Days 1-8), and then Global is disabled. If you want to apply the Notification Times to Sunday - Holiday, press Global again at the "Enter hour" prompt.

All system configuration selections are logged to the optional printer.

The following examples assume that you have pressed 6 to access System Configuration. At the "System Configuration. Enter System selection" prompt, enter one of the selections described below.

0 System Identification

This selection lets you record an 8-second identification message that is delivered every time DiaLog Plus calls out or someone calls in from a remote phone. The selection also lets you program an identification number, such as the DiaLog Plus telephone number, that is used with callouts to display pagers and on printed reports.

When the tone sounds, the microphone automatically turns on. After 8 seconds, a second tone indicates the microphone is off, and DiaLog Plus prompts "Please wait" while the message is saved. After a short interval, DiaLog plays the message back.

For the best quality messages, record them in quiet surroundings. If this is impossible at the front panel, record the messages by calling in from a remote telephone.

DiaLog's factory-programmed System Identification voice message is "This is DiaLog Plus." To restore the factory-programmed message, press RESET (*2) before the initial tone.

The factory-set identification number is 1.

What you enter	*What DiaLog says*
0 (System Identification)	"**System identification message.** The present message is 'This is DiaLog Plus.' Press Pound (#) if OK, or 1 to record new message at the tone."
1	(Tone sounds.)
Dictate message.	(Tone sounds.) "Please wait."
	"The new message is _____."
	"**System identification number.** The present number is 1. Enter new number or press Pound (#) if OK."
Up to 18 characters, 0-9, A-D, * and #, then ENTER	"The new number is _____."
	"**System configuration.** Enter system selection."

1 Date and Time

You must program the current date and time before you can set up valid Status Notification and Disarmed/Armed schedules or the Holiday Calendar. The date and time are shown with all events logged to the optional printer.

Program both date and time in a series of three 2-digit entries (or 1 digit plus ENTER or #).

The factory-set date is 01/01/90, and the factory time is 00:00:00. If you turn off the power switch, the date and time revert to the factory settings.

What you enter	*What DiaLog says*
1 (Date and Time)	"**System date.** The present year is 90. Enter new year or press Pound (#) if OK."
2-digit year	"The new year is __."
	"The present month is 1. Enter new month or press Pound (#) if OK."
2-digit month	"The new month is __."
	"The present day is 1. Enter new day or press Pound (#) if OK."
2-digit day	"The new day is __."
	"**System time.** The present hour is 0. Enter new hour or press Pound (#) if OK."
2-digit hour	"The new hour is __."
	"The present minute is 0. Enter new minute or press Pound (#) if OK."
2-digit minute	"The new minute is __."
	"The present seconds are 0. Enter new seconds or press Pound (#) if OK."
2-digit seconds	"The new seconds are __."
	"**System configuration.** Enter system selection."

2 Access Code

Each DiaLog Plus system can be programmed with a 4-digit access code (password) to prevent unauthorized use. You must program all four digits.

For obvious security reasons, DiaLog Plus does not recite the access code and it is never shown on the printed log. However, the date and time the code is set are recorded on the optional printer.

Once you program an access code, DiaLog Plus requests the code every time you press 1 (BYPASS). You must enter all 4 digits of the code. You have two chances to enter the code correctly. After the second incorrect attempt, DiaLog Plus automatically switches out of Bypass into Run mode.

You cannot do a Memory Clear without first resetting the Access Code. The factory setting is 0000 (disabled).

What you enter	*What DiaLog says*
2 (Access Code)	"**Access Code.** The access code is disabled. Enter access code."
4-digit code	"The access code is enabled."
	"**System configuration.** Enter system selection."

3 Telephone Numbers

This is the only parameter that you must program in order to put DiaLog Plus into operation. As soon as you enter one or more telephone numbers in List 1, the system can take over alarm notification, using its factory programmed messages and calling parameters.

You can program up to 64 telephone numbers, either 8 lists of 8 numbers (the factory setting) or 4 lists of 16. See Telephone Lists under Setup, page 32.

Each telephone number can have up to 35 digits or special characters. The special characters, and the symbols that appear on the printer, are:

* 3	Modem (option) (M)	* *	* tone/character (*)
* 5	Radio (option) (K)	* #	# tone/character (#)
* 7	Pager (P)	A	A tone/character (A)
* 8	Dial Tone Detect (T)	B	B tone/character (B)
* 9	2-second Delay (W)	C	C tone/character (C)
		D	D tone/character (D)

DiaLog™ Plus

User's Guide

Document No. M4560-5, Rev. 5
July 1994

Kaye Instruments, Inc.
15 De Angelo Drive
Bedford, MA 01730
(617) 275-0300
FAX (617) 275-9024

Proprietary Notice

This document discloses information considered proprietary to Kaye Instruments, Inc. Neither this document nor the information disclosed herein shall be reproduced or transferred to other documents, or used or disclosed to others for any purpose, except as specifically authorized in writing by Kaye Instruments, Inc. The information contained in this document is subject to change without notice and should not be construed as a commitment by Kaye Instruments, Inc. Kaye Instruments assumes no responsibility for any errors which may be in this document.

Copyright © 1993. Printed in USA on recycled stock.

DiaLog Plus is a trade name of Kaye Instruments, Inc.

Touch-Tone is a trademark of AT&T.

Dial tone detect

Special characters can be placed anywhere in the telephone number. For example, if DiaLog Plus needs to dial 9 to get out of an internal phone system, it may also need to detect a dial tone before continuing with the number. Therefore, when you program the phone numbers, enter 9 and then *8.

For each telephone number you program, enter the List Number, the List Position, and then the Telephone Number. For each List, you can enter 8 telephone numbers (or 16 numbers, if you have selected the 4-list option in Setup). Press ENTER when you finish keying in a telephone number, unless you enter the maximum 35 characters. Press RESET (*2) to cancel an entry and return to the previous prompt.

A sample Telephone Number programming sequence is illustrated below. It shows ENTER (#) used twice to exit the sequence, one prompt level at a time. You can use HOME (*6) to exit to the "System ready" prompt.

The factory setting for Telephone Numbers is disabled (no entries).

What you enter	*What DiaLog says*
3 (Telephone Numbers)	"**Telephone Numbers. Enter List Number.**
1-8 (or 1-4)	"Telephone List 1. **Enter List Position.**"
1-8 (or 1-16)	"Telephone List 1, Position 1. The present number is disabled. **Enter new telephone number** or press Pound (#) if OK."
Up to 35 digits 0-9 or special characters	"The new number is 18003434624."
	"Telephone List 1. Enter List Position."
ENTER (#)	"Telephone Numbers. Enter List Number."
ENTER (#)	"**System Configuration.** Enter system selection."

Radio interface

If you have the optional factory-installed radio interface, you can program DiaLog to send alarm and status notification messages over a radio transmitter instead of via telephone. Simply enter *5, the Radio Transmission special character, instead of a telephone number. DiaLog repeats the messages a maximum of two times: if Message Repeats are set to 1, it speaks the messages once, and if Message Repeats are set to 2 or higher, it speaks the messages twice. It then unkeys the radio transmitter and goes into its Between Calls Delay.

6 Delays

This selection lets you specify the length of three delay periods: Bypass to Run, Between Calls, and Redial After Acknowledge.

The *Bypass to Run Delay* is the amount of time that must elapse before DiaLog Plus automatically goes from Bypass mode to Run mode. Suppose the Bypass to Run delay is 60 minutes. This means that if you forget to press 2 (Run) after you program the system, it automatically switches into Run mode after one hour and begins its alarm monitoring and notification tasks. You can specify a Bypass to Run Delay of 0-999 minutes. 0 disables automatic switchover, which means you must put the system into Run mode manually.

The *Between Calls Delay* is the amount of time between the system's alarm callouts. This delay gives a busy line a chance to become free, so that if you have enabled Redial Number, DiaLog may be able to reach a busy number on the second try. Also, the Between Calls Delay provides time for someone to phone in an alarm acknowledgement, if you have enabled Call In Acknowledge. You can specify a Between Calls Delay of 10 to 9999 seconds.

The *Redial after Acknowledge Delay* is the amount of time Dialog waits, after receiving acknowledgement of an alarm, for the alarm condition to clear before it restarts the notification process. You can specify a delay of 1 to 9999 minutes.

The factory settings for the delays are:

Bypass to Run	- 60 minutes
Between Calls	- 30 seconds
Redial after Acknowledge	- 60 minutes

What you enter	*What DiaLog says*
6 (Delays)	"**System delays. Bypass to Run Delay.** The present value is 60 minutes. Enter new value or press Pound (#) if OK."
Three digits, 000-999 (or one or two digits plus ENTER)	"The new value is ___ minutes."
	"**Between Calls Delay.** The present value is 30 seconds. Enter new value or press Pound (#) if OK."
Four digits, 0010-9999 (or two to three digits plus ENTER)	"The new value is ____ seconds."
	"**Redial after Acknowledge Delay.** The present value is 60 minutes. Enter new value or press Pound (#) if OK."
Four digits, 0001-9999 (or one to three digits plus ENTER)	"The new value is ____ minutes."
	"**System configuration.** Enter system selection."

7 Status Notification Schedule

You can program DiaLog Plus to make scheduled call-outs up to 4 times a day, 7 days a week plus holidays, with a status report. Different telephone lists can be assigned to each day. You might want to use this feature just to get daily assurance that the telephone line to a site is in working order. A status notification call must be acknowledged.

Before the system makes a status call, it checks all input channels. If any unacknowledged alarms exist, DiaLog Plus skips the status notification procedure so it can carry out its primary task of alarm notification.

When it is time for a status call-out, DiaLog Plus dials the designated telephone number(s), delivers the system identification message, current date and time, mode (Run or Bypass), Armed/Disarmed status, and channels in alarm. Also, when applicable, it delivers a power fail message, low battery or bad battery message, and Program Holiday Calendar message. It then says "Please acknowledge," and waits 5 seconds for a *, 8 or 9 (ACKNOWLEDGE) signal.

If the system receives an ACKNOWLEDGE signal, it says "Status notification acknowledged," waits an additional 5 seconds for keystrokes, then says "Call complete. Goodbye" and hangs up. During the final 5-second delay, the person receiving the call can press # (ENTER) and then enter a programming selection. If DiaLog Plus does not receive an ACKNOWLEDGE signal, it repeats the message sequence (see Message Repeats) before moving on to the next number on the telephone list.

To program the Status Notification Schedule, select the day of the week (1-8, Sunday through Holiday). Then assign a Telephone List (1-8) and up to four notification times. For each notification time, you enter a 2-digit hour in 24-hour format and a 2-digit minute. (You can cancel an entry by pressing # instead of entering a minute.) If the system is set up for 12-hour clock format, DiaLog translates 24-hour time into A.M. and P.M. when it confirms the entry. For example, it confirms 15 hours, 30 minutes as "3 hours, 30 minutes, P.M."

Using the Global command

To assign the same Telephone List to the selected day and all subsequent days, press *4 (Global) at the "Enter list number" prompt. DiaLog Plus confirms the keystroke with "Global Enabled." Global is automatically disabled as soon as the Telephone List is programmed.

To program the same notification time for the selected day and all subsequent days, press *4 (Global) at the "Enter hour" prompt. After you enter the minute, DiaLog Plus speaks the time and confirms the days of the week that are programmed, for example, "8 hours, 30 minutes, A.M. added. Friday added; Saturday added; Holiday added." Global remains enabled until all four notification times are programmed or you disable it by pressing *4 again, ENTER (#), RESET (*2) or HOME (*6).

Deleting a time

To delete a time from the Status Notification schedule, just re-enter it. For example, if you wanted to delete 8:00 A.M. from the sample schedule on the next page, at the second "Enter hour" prompt, you would re-enter 8 hours, then 0 minutes. DiaLog Plus would confirm "8 hours, 0 minutes deleted." Since Global is still enabled, DiaLog Plus would say, "Monday deleted; Tuesday deleted; Wednesday deleted; Thursday deleted; Friday deleted; Saturday deleted; Holiday deleted."

To clear all the notification times from a schedule, press RESET (*2) at the "Enter hour" prompt.

A sample Status Notification programming sequence is shown on the next page. We have assigned List 1 to every day of the week, including holidays, and programmed one daily notification time, 8:00 A.M. At the end, we use ENTER (#) twice to exit to the "Enter system selection" prompt.

The factory setting for Status Notification is disabled (no call-outs).

What you enter	*What DiaLog says*
7 (Status Notification)	"**Status Notification Schedule. Enter day** or press Pound (#) to exit.
One digit 1-8 (Sunday - Holiday)	Sunday Telephone List. The present list is disabled. **Enter list number** or press Pound (#) if OK."
*4	"Global enabled."
One digit 1-8 (or 1-4, if you selected 4 lists)	"The new List is 1."
	"Global disabled."
	"**Sunday Status Notification Schedule.** No entry. **Enter hour** or press Pound (#) if OK."
*4	"Global enabled."
08 (or 8 #)	"The new hour is 8."
	"**Enter minute** or press Pound (#) to exit."
00 (or 0 #)	"The new minute is 0. 8 hours, 0 minutes, A.M. added. Monday added; Tuesday added, Wednesday added; Thursday added; Friday added; Saturday added; Holiday added."
	"Sunday Status Notification Schedule. **Enter hour** or press Pound (#) if OK."
*4	"Global disabled."
ENTER (#)	"Status Notification Schedule. **Enter day** or press Pound (#) to exit."
ENTER (#)	"**System configuration.** Enter system selection."

SEPARATE WEEKEND/HOLIDAY NOTIFICATION SCHEDULE

To program one schedule for weekdays and a different schedule for weekends and holidays, follow these steps:

- Select Monday (Day 2), turn on Global at the Monday "Enter list number" prompt, and enter the weekday Telephone List. This programs the same list to Monday-Holiday (Days 2-8).
- Turn on Global at the first "Enter hour" prompt. This will program the same notification times to Monday-Holiday (Days 2-8). Turn off Global after your final time entry.
- Select Saturday (Day 7), turn on Global at the Saturday "Enter list number" prompts, and enter the weekend Telephone List. This programs the same list to Saturdays and Holidays (Days 7-8).
- Turn on Global at the first "Enter hour" prompt. This programs the same notification times to Saturday-Holiday (Days 7-8). Turn off Global after your final time entry.
- Select Sunday (Day 1). Do not turn on Global, but assign the same Telephone List and notification times that you assigned to Saturdays and Holidays.

8 Disarmed/Armed Schedule

As it is shipped from the factory, DiaLog Plus monitors its AC power line and input channels continuously, and makes notification calls whenever an alarm is detected. However, you can disarm the system (disable alarm call-outs) during hours when employees are at the site, for instance, from 8:00 A.M. to 5:00 P.M. on weekdays.

For example, to disarm the system during working hours on weekdays, you program a Disarmed Time of 08:00 and an Armed Time of 17:00 for Monday through Friday. Disable both the Disarmed Time and Armed Time for Saturday, Sunday and holidays, which leaves the system always armed.

Be careful not to leave DiaLog Plus disarmed.

IMPORTANT: If you enter a Disarmed Time, you must also enter an Armed Time or you may permanently disarm the system.

A Disarmed or Armed status carries over from one day to another until DiaLog Plus encounters a different status. For instance, suppose you are operating on the above schedule, where DiaLog Plus is disarmed at 8:00 A.M. and armed at 5:00 P.M. Monday-Friday. If you disable the Wednesday Armed Time, DiaLog Plus will not make any alarm notification calls until it encounters the Thursday Armed Time at 5:00 P.M.

If you disarm the system and do not re-arm it, DiaLog Plus warns "No Armed Time in schedule" before you exit the Disarmed/Armed Schedule and when the system enters Run mode. "No Armed Time in Schedule" is also included

in the System Status report. A message is logged to the optional printer whenever the system is disarmed or armed.

The Disarmed/Armed schedule does not affect Status Notification.

To program, select the day of the week (1-8, Sunday through Holiday). Then enter a 2-digit hour (in 24-hour time format) and a 2-digit minute at the Disarmed Time and Armed Time prompts. (You can cancel an entry by pressing # instead of entering a minute.) If you selected a 12-hour clock format in Setup, DiaLog converts the hour to 12-hour time and adds "A.M." or "P.M." when it confirms your entries.

To accept the present Disarmed or Armed time, press ENTER (#) at the "Enter hour" prompts.

To delete a time from the schedule, press RESET (*2).

To program the same Disarmed and Armed Times for the selected day and all subsequent days, press *4 (Global) at the Disarmed Time "Enter hour" prompt. DiaLog Plus confirms the selection with "Global Enabled." Global is automatically disabled as soon as the Armed Time minutes are entered.

A typical Disarmed/Armed Schedule programming sequence is shown below. The schedule disarms DiaLog Plus Monday-Friday from 8:00 A.M. to 5:00 P.M. and arms it every night, and on weekends and holidays. Starting with Monday, we programmed a global Disarmed Time and Armed Time of 8:00 A.M. and 5:00 P.M. The Global command programmed Monday-Holiday. Next, we armed Saturday and Holiday by globally disabling both the Disarmed and Armed Times. Finally, we armed Sunday by accepting the factory settings (Disarmed and Armed Times both disabled).

What you enter	*What DiaLog says*
8 (Disarmed/Armed Schedule)	"**Disarmed/Armed Schedule. Enter day** or press Pound (#) if OK."
2 (Monday)	**Monday Disarmed Time.** The present selection is disabled. **Enter hour** or press Pound (#) if OK."
*4	"Global enabled."
08 (or 8 #)	"The new hour is 8. **Enter minute** or press Pound if OK."
00 (or 0 #)	"The new selection is 8 hours, 0 minutes, A.M.

What you enter	*What DiaLog says*
	"**Monday Armed Time.** The present selection is disabled. **Enter hour** or press Pound (#) if OK."
17	"The new hour is 17. **Enter minute** or press Pound (#) if OK."
00	"The new selection is 5 hours, 0 minutes P.M."
	"Global disabled."
	"**Disarmed/Armed Schedule. Enter day** or press Pound (#) if OK."
7 (Saturday)	"**Saturday Disarmed Time.** The present selection is 8 hours, 0 minutes A.M. **Enter hour** or press Pound (#) if OK."
*4	"Global enabled."
*2	"The new selection is disabled.
	"**Saturday Armed Time.** The present selection is 5 hours, 0 minutes P.M. **Enter hour** or press Pound (#) if OK."
*2	"The new selection is disabled."
	"Global disabled."
	Disarmed/Armed Schedule. Enter day or press Pound if OK."
1 (Sunday)	"**Sunday Disarmed Time.** The present selection is disabled. **Enter hour** or press Pound (#) if OK."
#	"**Sunday Armed Time.** The present selection is disabled. **Enter hour** or press Pound (#) if OK."
#	"**Disarmed/Armed Schedule. Enter day** or press Pound (#) if OK."
#	"**System Configuration.** Enter system selection."

9 Holiday Calendar

This selection lets you assign Holiday status to up to 20 days in the year. DiaLog Plus then treats these days as holidays for the purposes of Status Notification and the Disarmed/Armed schedule.

The dates you choose are entirely up to you, which means that DiaLog Plus can accommodate traditional holidays in a number of different countries, as well as individual plant shutdowns or vacation schedules.

The Holiday Calendar has a 13-month cycle, so during the month of January you can program holidays for January of the present year and January of the coming year. This gives you a one-month grace period every year in which to re-enter holidays. Every January, DiaLog Plus delivers a "Program holiday calendar" message with the other system status messages. The reminder is repeated either until you select the Holiday Calendar parameter (with or without reprogramming the holidays) or until January 31 passes.

You can add holidays to the calendar at any time, as long as the holiday is still in the future (you cannot add the current day to the calendar), and the calendar is not full. For example, in April you can add October 12 to the Holiday Calendar, but you cannot add February 22 because that date has passed.

For each holiday, enter a 2-digit month and a 2-digit day. After each entry, DiaLog prompts, "[Month, day] added." You do not have to enter the dates in chronological order; DiaLog Plus automatically sorts them for you.

If the maximum number of dates has been programmed, DiaLog Plus prompts "Calendar is full. [Month, day] not added" and reverts to the "Enter month" prompt.

To delete a holiday, re-enter it. DiaLog prompts "[Month, day] deleted." RESET (*2) deletes all entries and returns you to the "Holiday Calendar" prompt.

To exit the Holiday Calendar selection, press ENTER (#) at an "Enter month" prompt. HOME (*6) returns you to the "System ready" prompt.

The following example shows how to program July 4, Christmas and New Year's Day of the following year into the Holiday Calendar.

What you enter	*What DiaLog says*
9 (Holiday Calendar)	"**Holiday Calendar.** No entry. **Enter month** or press Pound (#) if OK."
07	"The new month is 7. **Enter day** or press Pound (#) if OK."
04	"The new day is 4. **July 4 added.**
	"Holiday calendar. **Enter month** or press Pound (#) if OK."
12	"The new month is 12. **Enter day** or press Pound (#) if OK."
25	"The new day is 25. **December 25 added.**"
	"Holiday calendar. **Enter month** or press Pound (#) if OK."
13	"The new month is 13. **Enter day** or press Pound (#) if OK."
01	"The new day is 1. **Next January 1 added.**"
	"Holiday Calendar. **Enter month** or press Pound (#) if OK."
#	"**System configuration.** Enter system selection."

To check the Holiday Calendar, follow this sequence:

What you enter	*What DiaLog says*
9 (Holiday Calendar)	"Holiday Calendar. The present calendar is July 4, December 25, next January 1. **Enter month** or press Pound (#) if OK."
ENTER (#)	"System configuration. Enter system selection."

9 Channel Configuration

This selection lets you set parameters that apply to individual channels. Table 6 summarizes these parameters.

Table 6. Channel Configuration

Key	*Selection*
9	CHANNEL CONFIGURATION
	▸ **Channel number**
* 4	Global (apply entry to selected and successive channels. You can enter this command *after* each channel selection listed below.)
0	Channel State (DI only)
1	Channel Messages (DI only)
2	Channel Mode (PF and DI)
3	Telephone List 1-8 (or 1-4) (PF and DI)
4	Alarm Delay, 1-999 seconds (PF and DI)
5	▸ Totalizer limit 0-65535 (PF and DI) ▸ Duration limit 0-65535 minutes
6	▸ Totalizer reset, 0-65535 (PF and DI) ▸ Duration reset, 0-65535 minutes
7	Output Type (RO only)
8	Change State (RO only)

Selecting a channel

When you press 9 (Channel Configuration), DiaLog Plus confirms the selection and then prompts for a channel number. Enter a channel number, and DiaLog confirms your entry, adding "Digital Input" for Channels 1-8, "Power Failure" for Channel 0, or "Relay Output" for Channel 9. The channel remains selected from one channel parameter to another, so you can program several parameters without having to re-enter the channel number. In other words, after you complete a programming sequence, DiaLog Plus returns to the "Channel *n*. Enter channel selection" prompt.

Deselecting a channel

Press RESET (*2) to deselect the channel and return to the "Channel Configuration. Enter channel number" prompt.

Using the Global command

After you enter a channel number and a channel selection, you can press *4 (Global) to apply the entry not only to the selected channel but also to all successive channels. For example, if you select Channel 2, then Channel State, and press *4 (Global), the state you select for Channel 2 (Normally Open or Normally Closed) will also be applied to Channels 3 - 8. Global mode is enabled for one channel parameter only. Using the previous example, Global is automatically disabled as soon as you enter 0 or 1 to select the Channel State.

To disable Global during an entry, press *4 again. DiaLog Plus responds, "Global disabled." You can also disable Global with ENTER, RESET or HOME.

The Global command is not valid with Channel 9 (Relay Output). The only valid commands for Channel 9 are Output Type (command 7) and Change State (command 8).

The following examples assume that you have already pressed 9 to access Channel Configuration, and at the "Channel Configuration. Enter channel number" prompt, you have pressed 1 to select Channel 1.

0 Channel State

This selection lets you specify the normal state of the contact at a Digital Input channel: Normally Open or Normally Closed. You cannot change the normal state of the contact at the Power Fail channel (Channel 0), which is fixed as Normally Open.

The factory setting for all channels is Normally Open.

In the entry sequence below, *4 (Global) is used to apply the same state to Channels 1-8.

What you enter	*What DiaLog says*
0 (Channel State)	"**Channel state.** The present selection is Normally Open. Enter new selection or press Pound (#) if OK."
*4	"Global enabled."
0 = Normally Open 1 = Normally Closed	"The new selection is _____."
	"Global disabled."
	"Channel 1, Digital Input. **Enter channel selection.**"

1 Channel Messages

This selection lets you record an 8-second Alarm or On message for each digital input channel or two 4-second messages, one for the Normal or Off condition and one for the Alarm or On condition. (You cannot record messages for Channel 0, Power Failure, or Channel 9, Relay Output. The factory-programmed Channel 0 alarm message is "System on battery backup." The factory-programmed normal message is "Power normal." The factory-programmed messages for Channel 9 are "The present status is On" and "The present status is Off.")

The factory-programmed messages are designed to serve digital input channels set for Call On Alarm mode, Status Only mode or Call on Limit mode (see Channel Mode). The alarm messages, both 8-second and 4-second, for Channels 1-8 are "Channel *n* is in Alarm" or "Channel *n* is On." The 4-second normal message is "Channel *n* is Normal" or "Channel *n* is Off."

To record a new message, first select whether you want one 8-second message or two 4-second messages. If you select the two-message option, DiaLog Plus prompts first for the normal message and then for the alarm message.

When the tone sounds, speak clearly about 6" from the microphone. The tone sounds again after 4 or 8 seconds, indicating the end of the recording interval. DiaLog plays your message back. If you are dissatisfied, you can re-record the message. *4 (Global) is not valid when you record a message.

The following sequences show you how to program both one 8-second message and two 4-second messages. A pointer indicates our selections.

8-second alarm message

What you enter	*What DiaLog says*
1 (Channel Messages)	"**Channel Messages.** The present selection is two 4-second messages. Enter new selection or press Pound (#) if OK."
0 - One 8-second message 1 - Two 4-second messages	"The new selection is one 8-second message."
	"**8-second Alarm or On Message.** The present message is 'Channel 1, Digital Input, is in Alarm.' Press Pound (#) if OK or 1 to record new message at the tone."
1	(Tone sounds.)
Speak message.	(Tone sounds.) "Please wait."
	"The new message is _____."
	"Channel 1, Digital Input. **Enter channel selection.**"

Two 4-second messages

What you enter	*What DiaLog says*
1 (Channel Messages)	"**Channel Messages.** The present selection is one 8-second message. Enter new selection or press Pound (#) if OK."
0 - One 8-second message 1 - Two 4-second messages	"The new selection is two 4-second messages."
	"**4-second Normal or Off Message.** The present message is 'Channel 1, Digital Input, is Normal.' Press Pound (#) if OK or 1 to record new message at the tone."
1	(Tone sounds.)
Speak message.	(Tone sounds.) "Please wait."
	"The new message is _____."
	"**4-second Alarm or On message.** The present message is 'Channel 1, Digital Input, is in Alarm.' Press Pound (#) if OK or 1 to record new message at the tone."
1	(Tone sounds.)
Speak message.	(Tone sounds.) "Please wait."
	"The new message is _____."
	"Channel 1, Digital Input. **Enter channel selection.**"

2 Channel Mode

This selection lets you specify if and when a channel makes alarm notification calls. The channel mode determines the content of the alarm and status messages.

- You can *Disable* a channel, which means that the channel does not go into alarm and is not included in a Status Notification call. For example, you may want to disable a channel that is monitoring equipment currently under repair, or a channel that is currently unused. The only way to get information on a disabled channel is through a System Status request. The status message is "Channel *n*, Digital Input, is disabled." You cannot modify this message.

- You can designate a channel as *Status Only*, which means that the channel does not initiate an alarm call-out (and does not cause the alarm LED to light when it changes state) but can be included in a Status report. For example, you can select Status Only mode for a channel monitoring the On/Off status of a pump, because while you want to be able to find out the status, you don't want DiaLog to make an alarm call every time the pump goes on. To check the status, press 0 (System Status), then at the prompt enter the channel number or ** for all channels. The factory-programmed On message is "Channel *n*, Digital Input, is On." The factory-programmed Off message is "Channel *n*, Digital Input, is Off." You can record an alternative 8-second On message, or two 4-second messages, one for the Off condition and one for On.

- You can accept the factory-set mode, *Call on Alarm*, where DiaLog automatically makes alarm notification calls when the channel goes into alarm. Before calling out, DiaLog Plus waits for the Alarm Delay to time out, ensuring that the channel is in fact in alarm, not just reflecting a power surge, for instance. (The factory-set Alarm Delay is 3 seconds, but you can program a delay of 1-999 seconds.) The factory-programmed messages are "Channel *n*, Digital Input, is in Alarm" and "Channel *n*, Digital Input, is Normal." You can program alternative messages.

  If the channel is programmed as Call on Alarm, you specify whether or not the system continues to call even if the alarm clears. The factory setting is Disabled (DiaLog does not continue to call).

- You can program a channel as *Call on Limit*, which means that DiaLog calls when one of the channel's counter limits is reached. Each channel has two counters associated with it: a Totalizer and a Duration Counter. The Totalizer counts the number of times the channel goes from normal to off-normal state, while the Duration counter keeps track of how long the channel stays in off-normal state. The factory-programmed alarm message is "Channel *n*, Digital Input, is in alarm." You can program a different message. If the Totalizer limit is reached, after speaking the alarm message DiaLog says, "Totalizer alarm. The present Totalizer count is _____." If the Duration Counter limit is reached, DiaLog says, "Duration alarm. The present Duration count is __ hours, __ minutes, __ seconds."

To clear the alarm at a channel set for Call on Limit, you must manually reset the Totalizer or Duration counter.

The following sequence programs Channel 1, which in this example is currently disabled, as Call on Alarm, and tells DiaLog to continue calling after the channel returns to normal.

What you enter	*What DiaLog says*
2 (Channel Mode)	"**Channel Mode.** The present selection is Disabled. Enter new selection or press Pound (#) if OK."
0 - Disabled 1 - Status Only 2 - Call on Alarm ☎ 3 - Call on Limit	"The new selection is Call on Alarm."
	"**Continue alarm notification if return to normal.** The present selection is Disabled. Enter new selection or press Pound (#) if OK."
0 - Disabled 1 - Enabled ☎	"The new selection is Enabled."
	"Channel 1, Digital Input. **Enter channel selection.**"

3 Telephone List

This selection lets you assign a telephone list 1-8 (or 1-4, if you specified 4 lists in Setup) to a channel. The channel's alarm priority is determined by the telephone list. List 1 has the highest priority, with priority going down as the list number goes up. The following sequence assigns List 2 to Channels 1-8.

The factory setting for all channels is List 1.

What you enter	*What DiaLog says*
3 (Telephone List)	"Telephone List. The present list is 1. Enter list number."
*4	"Global enabled."
2	"The new list is 2."
	"Global disabled."
	"Channel 1, Digital Input. Enter channel selection."

4 Alarm Delay

This selection lets you specify an Alarm Delay of 1-999 seconds for each channel. The Alarm Delay is the period of time that the channel must be in an alarm condition before DiaLog Plus starts the call-out process. This time delay helps ensure that the channel is in fact in alarm, not merely reflecting a power surge or vibrating relay.

The factory setting for the Alarm Delay is 3 seconds.

What you enter	*What DiaLog says*
4	"Alarm Delay. The present value is 3 seconds. Enter new value or press Pound (#) if OK."
3 digits 001-999 (or one or two digits plus ENTER)	"The new value is ___ seconds."
	"Channel 1, Digital Input. Enter channel selection."

5 Limits

There are two counters associated with each DiaLog Plus channel: a Totalizer and a Duration counter. The Totalizer keeps track of the number of times a channel goes from normal to off-normal state (for example, Off to On or Open to Closed). The Duration counter keeps track of the number of minutes a channel is in off-normal state.

Use the Limits selection to enter limits for the Totalizer and the Duration counter. When one of these limits is reached, it triggers an alarm call-out if the channel is programmed to Call on Limit (see Channel Mode). You can set a Totalizer limit from 0-65535, and a Duration Counter limit from 0-65535 minutes. *If the limits are 0, DiaLog does not call out.*

*4 (Global) applies to one limit at a time. For example, if you press *4 at the "Totalizer limit" prompt, only the Totalizer limit value is applied to the selected and successive channels. You must press *4 again at the "Duration limit" prompt to apply a Duration limit value to the present and successive channels.

(If there is a power loss *and* the battery has failed, the counters are reset to 0.)

The factory setting for Totalizer limit is 65535, and for the Duration Counter, 120 minutes.

What you enter	*What DiaLog says*
5 (Limits)	"**Limits. Totalizer limit.** The present value is 65535. Enter new value or press Pound (#) if OK."
Five digits 00001-65535 (or one to four digits plus ENTER)	"The new value is ____ ."
	"**Duration limit.** The present value is 120 minutes. Enter new value or press Pound (#) if OK."
Five digits 00001-65535 (or one to four digits plus ENTER)	"The new value is ___ minutes."
	"Channel 1, Digital Input. **Enter channel selection.**"

6 Resets

This selection is actually a runtime operation, not a programming parameter. The Totalizer and Duration counters automatically reset to zero when they reach their maximum value, which is 65535. (The counters do not reset when they reach the limits you have programmed.)

You can use this selection to do an immediate reset of the counters, either to zero or, if you need an offset for your starting point, to another value. An alarm at a channel programmed to Call on Limit will not clear until you reset the counter, using this command.

*4 (Global) applies to one reset at a time. For example, if you enter *4 at the "Totalizer reset" prompt, only the Totalizer reset value is applied to the selected and successive channels. You must enter *4 again at the "Duration reset" prompt to apply a Duration reset value to the selected and successive channels.

The following sequence resets the Totalizer and Duration counters for Channels 1-8 to zero.

What you enter	*What DiaLog says*
6 (Resets)	"Resets. Totalizer Reset. The present value is ____. Enter new value or press Pound (#) if OK."
*4 (Global)	"Global enabled."
0, #	"The new value is zero."
	"Global disabled."
	"Duration reset. The present value is ___ minutes. Enter new value or press Pound (#) if OK."
*4 (Global)	"Global enabled."
0, #	"The new value is zero minutes."
	"Global disabled."
	"Channel 1, Digital Input. Enter channel selection."

7 Output Type (RO only)

This selection applies only to Channel 9, the Relay Output channel. The Relay Output is factory-set to Alarm, and is activated automatically whenever any DiaLog Plus channel goes into an Alarm State. However, you can set up the relay as User Controlled (see Setup, page 34), access it via Channel 9, program it with the Output Type command as User Latched or Time Latched, and control it with the Change State command. (Only Channel Configuration commands 7 and 8 are valid with the Relay Output channel.)

User Latched, the default state of the relay when it is programmed as User Controlled, means that once you set the Relay Output to On or Off, it stays in that state until you change it. (If you power DiaLog off and then on again, the relay will come up Off.)

Time Latched means that when you set the relay, it stays in that state until a previously-programmed duration times out, and then switches back to its original state. When you program the relay as Time Latched, DiaLog prompts for a duration. The default duration is 1 second. (If you power DiaLog off and then on again, the relay will come up Off.)

The following sequence assumes you have selected Channel 9, Relay Output.

What you enter	*What DiaLog says*
7 (Output Type)	"**Output Type.** The present selection is User Latched. Enter new selection or press Pound (#) if OK."
0 - User Latched 1 - Time Latched ☎	"The new selection is Time Latched."
	"**Latch Duration.** The present value is 1 second. Enter new value or press Pound (#) if OK."
Two digits 01-99 (or one digit plus ENTER)	"The new value is __ seconds."
	"Channel 9, Relay Output. **Enter channel selection.**"

8 Change State (RO only)

This selection applies only to Channel 9, the Relay Output channel. In order for you to access Channel 9, the relay output must be set up as User Controlled (see Setup, page 34).

If you have programmed the output as User Latched, when you change the state of the relay, it stays in that state until you change it back to its original state. (If you power DiaLog off and then back on, a User Latched relay will come up Off.)

If you have programmed the output as Time Latched and specified a duration, when you change the state of the relay, it stays in that state until the duration times out. Then it automatically switches back to its original state.

If you turn a Time Latched relay On (1), and then give the On command (1) again, you simply restart the duration. You do not add a new duration to what remains of the first duration. In other words, duration times are not cumulative.

(If you power DiaLog off and then back on, a Time Latched relay will come up Off.)

The following sequence assumes you have selected Channel 9, Relay Output.

What you enter	*What DiaLog says*
8 (Change State)	"**Change State.** The present selection is Off. Enter new selection or press Pound (#) if OK."
0 - Off 1 - On	"The new selection is On."
	"Channel 9, Relay Output. **Enter channel selection.**"

Programming Forms

These forms will help you plan the program, and because they follow the verbal prompts, step-by-step, they should make it easier to enter your selections.

We suggest that you make copies of the forms and fill them out before you begin programming the DiaLog Plus. You will need to make multiple copies of the Channel Programming form, one for each input channel and power failure.

Use the last form, the Telephone Directory sheet, to list the telephone numbers you will be entering during system configuration. Depending on the number of telephone lists you select, you may have 8 lists of 8 telephone numbers or 4 lists of 16 numbers..

3 Setup	*Factory Settings*
0 Date/Time Format __ 0-4	*0 (mm/dd/yy hh:mm:ss)*
0 = mm/dd/yy hh:mm:ss 1 = yy-mm-dd hh:mm:ss 2 = dd.mm.yy hh.mm.ss 3 = dd/mm/yy hh:mm:ss 4 = dd mm yy hh:mm:ss	
Clock Format __ 0-1 (0 = 24-hour, 1 = 12-hour)	*0 (24-hour)*
1 Telephone Lists __ 0-1 (0 = 8 lists of 8, 1 = 4 lists of 16)	*0 (8 lists of 8)*
2 Call In Acknowledge __ 0-1 (0 = disabled, 1 = enabled)	*0 (disabled)*
3 Redial Number __ 0-1 (0 = disabled, 1 = enabled)	*0 (disabled)*
4 Printer Port	
Baud rate __ 0-3 (0 = 300, 1 = 1200, 2 = 2400, 3 = 9600)	*1 (1200 baud)*
Data bits __ 0-1 (0 = 7 bits, 1 = 8 bits)	*1 (8 data bits)*
Parity __ 0-2 (0 = Disabled, 1 = Odd, 2 = Even)	*0 (disabled)*
Stop bits __ 0-1 (0 = 1 bit, 1 = 2 bits)	*0 (1 stop bit)*
5 Relay Output __ 0-1 (0 = Alarm, 1 = User Controlled)	*0 (Alarm)*

6 System Configuration	*Factory Settings*
0 System identification	
8-second voice message _____	*"This is DiaLog Plus."*
_____	
18-character ID _ _ _ _ _ _ _ _ _ _ _ _ _ _ _ _ _ _	*1*
1 Date and Time	
Date _ _ / _ _ / _ _ yy/mm/dd	*90/01/01*
Time _ _ / _ _ / _ _ hh:mm:ss	*00:00:00*
2 Access Code _ _ _ _	*0000*

6 System Configuration *continued*	*Factory Settings*
3 Telephone Numbers	*Disabled*
List __ 1-8 (or 1-4) Position __ 1-8 (or 1-16) Enter number (up to 35 characters). See telephone directory sheet. _	
4 Message Repeat _ _ 1-20	*3*
5 Ring Count _ _ 1-20	*2*
6 Delays	
Bypass to Run _ _ _ 0-999 minutes	*60 minutes*
Between Calls _ _ _ _ 10-9999 seconds	*30 seconds*
Redial After Acknowledge _ _ _ _ 1-9999 minutes	*60 minutes*
7 Status Notification (hh/mm)	*No entries*
Telephone list ___ 1-8 Notification times _ _/_ _, _ _/_ _, _ _/_ _, _ _/_ _	
8 Disarmed/Armed Schedule (hh/mm)	*Disabled (always armed)*
9 Holiday Calendar (mm/dd)	*No entries*

Disarmed/Armed Schedule:

	Disarmed	Armed
Sunday	_ _/_ _	_ _/_ _
Monday	_ _/_ _	_ _/_ _
Tuesday	_ _/_ _	_ _/_ _
Wednesday	_ _/_ _	_ _/_ _
Thursday	_ _/_ _	_ _/_ _
Friday	_ _/_ _	_ _/_ _
Saturday	_ _/_ _	_ _/_ _
Holiday	_ _/_ _	_ _/_ _

Holiday Calendar:

_ _/_ _	_ _/_ _	_ _/_ _	_ _/_ _
_ _/_ _	_ _/_ _	_ _/_ _	_ _/_ _
_ _/_ _	_ _/_ _	_ _/_ _	_ _/_ _
_ _/_ _	_ _/_ _	_ _/_ _	_ _/_ _
_ _/_ _	_ _/_ _	_ _/_ _	_ _/_ _

	Factory Settings
9 Channel Configuration	
Enter channel number __ (0-9)	
0 Channel State (DI only) __ 0-1 (0=normally open, 1=normally closed)	*0 (normally open)*
1 Channel Messages (DI only) __ 0-1 0 = One 8-second alarm/on message: _____ _____ 1 = Two 4-second messages: Alarm/On message _____ Normal/off message _____	*0* *"Channel n is in alarm."*
2 Channel Mode __ 0-3 0 = Disabled 1 = Status Only (never call out) 2 = Call on Alarm Continue notification if normal __ 0-1 0 = Disabled 1 = Enabled 3 = Call on Limit	*2 (Call on alarm)* *0 (Disabled)*
3 Telephone List __ 1-8 (or 1-4)	*1 (highest priority)*
4 Alarm Delay ___ 1-999 seconds	*3 seconds*
5 Limits Totalizer limit _____ 1-65535 (0 to disable) Duration limit _____ 1-65535 minutes (0 to disable)	 *65535* *120 minutes*
6 Resets You reset the totalizer and duration counters manually by entering a reset value at the keypad or from a remote telephone. The range of entries is 0-65535 for the totalizer counter and 0-65535 minutes for the duration counter.	
7 Output Type (RO only) __ 0-1 0 = User Latched 1 = Time Latched Latch Duration __ __ 01-99 seconds	*0 (User Latched)* *1 second*
8 Change State (RO only) __ 0-1 (0 = Off, 1 = On)	*0 (Off)*

Telephone Directory

List 1
1.
2
3
4
5
6
7
8
List 2
1
2
3
4
5
6
7
8
List 3
1
2
3
4
5
6
7
8
List 4
1
2
3
4
5
6
7
8

List 5
1.
2.
3
4.
5.
6.
7.
8.
List 6
1.
2
3
4
5
6
7
8
List 7
1
2
3
4
5
6
7
8
List 8
1
2
3
4
5
6
7
8

List 1
1.
2
3
4
5
6
7
8
9
10
11
12
13
14
15
16

List 2
1
2
3
4
5
6
7
8
9
10
11
12
13
14
15
16

List 3
1.
2.
3
4.
5.
6.
7.
8.
9
10
11
12
13
14
15
16

List 4
1
2
3
4
5
6
7
8
9
10
11
12
13
14
15
16

6. Using DiaLog Plus

This section of the User's Guide describes the day-to-day operation of DiaLog Plus. It tells you how to:

- acknowledge an alarm
- cancel an alarm callout
- request a status report
- switch between Run and Bypass modes
- use DiaLog as a speaker phone
- call in and listen to sounds near the unit
- print a report of programming parameters or a State Change list
- reset channel totalizer and duration counters
- change the state of the Relay Output

Table 7. DiaLog Plus Operating Keystrokes

Front Panel	*Selection*	*Remote*
ACK	Acknowledge alarms	* or 8 or 9
HOME	Cancel alarm callouts	

Key	*Selection*
0	System Status
	n Single channel
	* * All channels
1	Bypass mode
2	Run mode
5	Call Out/Listen In
8	Print Configuration Report or State Change List
9	Channel Configuration
	6 Reset Counters
	8 Change State (RO only)

Acknowledge

From a remote telephone

At a remote telephone, when you receive an alarm notification call, DiaLog delivers the message, says "Please acknowledge," and waits 5 seconds for you to enter *, 8 or 9 (Acknowledge). *Note: wait until DiaLog has finished speaking to acknowledge the call.* If DiaLog doesn't receive an Acknowledge signal, it repeats "Please acknowledge" and waits another 5 seconds. It repeats this message sequence and then hangs up and waits for a return call.

If DiaLog receives an Acknowledge signal, it says "Alarms acknowledged," beeps three times and waits 5 seconds for you to press ENTER to begin programming. Your *, 8 or 9 signal acknowledges only the alarm message(s) you received. On the other hand, if Call In Acknowledge is enabled, a return call during the Between Calls Delay acknowledges all alarms in the system.

At the front panel

At the front panel, press ACK to acknowledge a channel in alarm. The red channel indicator goes from blinking (unacknowledged alarm) to steady On (alarm acknowledged but not cleared). If more than one channel is in alarm, ACK acknowledges them all simultaneously.

Alarm logging

If you have a printer attached, the log says "Channel *n* alarm acknowledged," "Alarm(s) acknowledged by Call In," or "Alarm(s) acknowledged local." When an alarm condition clears, the log says, "Channel *n* alarm cleared."

HOME Cancel Alarm Call-outs

At the front panel, press HOME to terminate a call in progress and return the system to on hook status.

0 System Status

From a remote telephone

At a remote telephone, when you dial DiaLog's number you automatically get an abbreviated System Status report, which includes:

- voice ID message
- current mode (Run or Bypass)
- Armed/Disarmed status
- Channels in alarm

After the status report, you hear three beeps. The system waits 5 seconds for you to press # (ENTER), then 0 (System Status) for complete System Status information. The complete report includes:

- voice ID message
- current date and time
- current mode (Run or Bypass)
- Armed/Disarmed status
- "System on battery backup" message if applicable
- Channels in alarm
- Low battery or Bad Battery message if applicable
- "Program Holiday Calendar" message if applicable

The following sequence illustrates a remote System Status request.

What you enter	*What DiaLog says*
DiaLog telephone number	"This is DiaLog Plus. Run mode activated. System is armed. Channels in alarm: Channel 1."
	(Three beeps followed by 5-second wait)
#	
0 (System Status)	"System Status. This is DiaLog Plus. Monday, January 31, 1993. 8 hours, 32 minutes. Bypass mode activated. System is armed. Channels in alarm: Channel 1. Program Holiday Calendar."
	"Enter channel number or Star, Star (**) for all channels. Press Pound (#) if OK."
1	"Channel 1, Digital Input. The present status is in Alarm."
	"Enter channel number or * * for all channels. Press Pound (#) if OK."
#	"System ready. Enter selection."

When you press a channel number or ** for information on all channels, DiaLog delivers the channel alarm/On or normal/Off message(s). If a channel is in alarm but has been acknowledged, DiaLog adds "Acknowledged" after the alarm message.

At the front panel

At the front panel, press 0. DiaLog delivers the complete System Status report shown above.

1 Bypass mode

DiaLog Plus powers up in Bypass mode. It must be in Bypass in order for you to program, turn the speaker off and on, call out or listen in, and print reports. The only command that is not valid in Bypass mode is Acknowledge (*, 8 or 9) from a remote telephone.

To switch the system from Run to Bypass mode, press 1.

In Bypass mode, the green RUN/BYPASS indicator on the front panel is blinking.

What you enter	*What DiaLog says*
1 (Bypass)	"**Bypass mode** activated. System ready. Enter selection."

The Bypass command is a logged event.

If an alarm occurs while DiaLog Plus is in Bypass mode, the alarm indicator lights, the relay output is activated, and the alarm is logged to the optional printer. DiaLog does not dial out, however, until it goes into Run mode.

2 Run mode

When you complete your programming tasks, press 2 to switch DiaLog Plus into Run mode. Your program (with the exception of your recorded messages) is not saved to memory until the system goes into Run mode, and it must be in Run mode to take over alarm monitoring and notification.

The commands valid in Run mode are Acknowledge (*, 8 or 9) from a remote phone, ACK at the front panel), Cancel Alarm Call-outs (HOME at the front panel), System Status (0) and Bypass (1).

In Run mode, the green RUN/BYPASS indicator on the front panel is steady On.

What you enter	*What DiaLog says*
2 (Run)	"**Run mode** activated. Please wait. . . System ready."

(If you have not made any program changes, you do not hear "Please wait.")

If a Bypass to Run Delay is programmed, DiaLog automatically enters Run mode as soon as the delay times out. It then immediately starts call-outs for any alarms that occurred while the system was in Bypass mode.

The Run command is a logged event.

5 Call Out

At the front panel, you can place an outgoing telephone call with the Call Out selection. The system must be in Bypass mode. As soon as you press 5, DiaLog Plus enables the speaker phone.

DiaLog rings the number for 30 seconds. If there is no answer, the command is cancelled and you are prompted, "System ready. Enter selection."

When a connection is made, DiaLog automatically gives the line to the person who is currently speaking, so either the speaker or the microphone is activated, but not both at the same time. After two minutes of conversation, you hear three warning beeps. To extend the call for two more minutes, press 5 immediately. You can extend the conversation as many times as you wish.

If you do not extend the conversation, DiaLog breaks the connection and prompts, "System ready." To hang up before the two-minute cutoff, press HOME. If the person at the other end hangs up first, DiaLog automatically breaks the connection.

Speaking over radio transmitter

If your DiaLog Plus system has the Radio Interface option, you can enter the Radio Transmission special character (*5) at the "Enter telephone number" prompt to speak your message over a radio transmitter. Press HOME to break the connection.

Call Out is a logged event. The date, time and telephone number called are logged to the optional printer.

What you enter	*What DiaLog says*
1 (Bypass)	"Bypass mode activated. System ready. Enter selection."
5 (Call Out)	"Speaker phone is enabled. Enter telephone number."
Up to 35 digits 0-9 and special characters; ENTER	(Places call.)

5 Listen In

At a remote telephone, the Listen In selection lets you hear sounds picked up by DiaLog's internal microphone, such as the noise of a pump motor.

DiaLog must be in Bypass mode. Press 5 to Listen In at any time during a call. The command turns on the microphone, and Listen In remains in effect for 25 seconds. At the end of the 25-second interval, you hear 3 warning beeps. Press 5 immediately to extend Listen In for 25 seconds more. You can extend Listen In as many times as you wish.

When Listen In times out, you return to the "System ready; enter selection" prompt. Listen In is automatically cancelled when the system goes from Bypass to Run mode.

Listen In is a logged event.

What you enter	*What DiaLog says*
1 (Bypass)	"Bypass mode activated. System ready. Enter selection."
5 (Listen In)	"Listen In enabled."

8 Print Configuration Report

If you are connected to a printer, this selection lets you print one of four separate configuration reports or a list of channel state changes, and lets you reset (clear) the State Change list:

- Setup
- System Configuration
- Channel Configuration
- Telephone Lists
- State Change List
- Reset State Change List

The system must be in Bypass mode.

When you select Channel Configuration, DiaLog prompts for a channel number. Enter a digit 0-9 or * * for a report on all channels.

The following sequence requests a report on all channels.

What you enter	*What DiaLog says*
1 (Bypass)	"Bypass mode activated. System ready. Enter selection."
8 (Print Configuration Report)	**"Print Configuration Report. Enter report number or press Pound (#) if OK."**
0 - Setup 1 - System configuration 2 - Channel configuration ☎ 3 - Telephone lists 4 - State Change List 5 - Reset State Change List	"The selection is Report 2, Channel Configuration."
	"Enter channel number or Star, Star for all channels. Press Pound (#) if OK."
* * ☎	"The report selection is all channels."
	(Report prints.)
	"System ready. Enter selection."

To cancel the channel configuration while the report is printing, press RESET.

Selection 4, the State Change List, is a record of the number of times channels have changed state from Normal to Alarm, for example, or from Off to On. The list includes the 50 most recent state changes.

The State Change List is not in fact a configuration report, but rather a print-out of DiaLog's event list. This list is saved in a First In, First Out storage area which holds up to 50 events. Each event is shown with a date/time stamp and a channel number. An event (state change) can be any of the following:

Channel type	*Event*
Digital Input Channel	
Mode = Status Only	State = ON
	State = OFF
Mode = Call on Alarm	Alarm Delay Timeout
	Return to Normal
Mode = Call on Limit	Duration Alarm
	Duration Alarm Cleared
	Totalizer Alarm
	Totalizer Alarm Cleared
Relay Output Channel	Relay ON
	Relay OFF
Power Fail Channel	Primary Power Failure
	Primary Power Normal

Select 5 at the Print Configuration menu to reset (clear) the State Change list. (Resetting the list is considered an event, and is included in the new list.)

Printing the list does not clear it. The only other way to clear the list is to power DiaLog off and then on again.

9 then 6 Reset Channel Counters

Each DiaLog Plus channel (except Channel 9, Relay Output) has two counters associated with it: a Totalizer and a Duration Counter. The Totalizer keeps track of the number of times the channel goes from normal to off-normal state, while the Duration Counter keeps track of the number of minutes the channel is in the off-normal state. The counters automatically reset to zero when they reach the maximum of 65535.

You can use the Reset Counters key sequence to do an immediate reset of the counters, either to zero or, if you need an offset for your starting point, to another value. The system must be in Bypass mode. *4 (Global) applies to one reset at a time. For example, if you enter *4 at the "Totalizer reset" prompt, only the Totalizer reset value is applied to the selected and successive channels. You must enter *4 again at the "Duration reset" prompt to apply a Duration reset value to the selected and successive channels.

If a channel is set to Call on Limit mode, and there is a Totalizer or Duration alarm, the alarm is not cleared until you reset the Totalizer or Duration counter. The alarm does not automatically clear when the counter reaches 65535.

The sequence on the next page resets the Totalizer and Duration counters for Channels 1-8 to zero.

What you enter	*What DiaLog says*
1	"Bypass mode activated. System ready. Enter selection."
9 (Channel Configuration)	"**Channel Configuration. Enter channel number.**"
1	"Channel 1, Digital Input. Enter channel selection."
6 (Resets)	"Resets. **Totalizer Reset. The present value is** _____. Enter new value or press Pound (#) if OK."
*4 (Global)	"Global enabled."
0, then # (ENTER)	"The new value is zero."
	"Global disabled."
	"**Duration reset. The present value is** ____ minutes. Enter new value or press Pound (#) if OK."
*4 (Global)	"Global enabled."
0, then # (ENTER)	"The new value is zero minutes."
	"Global disabled."
	"Channel 1, Digital Input. **Enter channel selection.**"

Appendix A

Specifications

General	
Input/output channels	4 or 8 digital inputs, monitoring Normally Open or Normally Closed contacts. Open circuit voltage: 28 VDC; loop current: <1.5mA. One SPDT output relay, contact rating 5A at 250 VAC or 5A at 30 VDC.
Telephone number capacity	8 lists of 8 numbers or 4 lists of 16, user-selectable
Recorded speech capacity	8 seconds per input channel message; 8 seconds for System Identification message
Dialing format	Touch-Tone or pulse, automatically selected
Registration	FCC: 2DFUSA-65859-AL-E; DOC (Canada): 1782 4665 A
Certification	CSA: LR 88255
Ringer equivalence	0.4B
Printer port	RS-232C serial
Electrical	
Power requirements	115 VAC ± 10% or 230 VAC ± 10%; 50 to 60 Hz; 15 watts. Maximum current draw on external DC power: 650 mA at 12 VDC.
Internal backup battery	6 VDC, 6.5 Ah gel cell, sealed lead-acid. 16.0 hours minimum backup at 86°F (30°C) 13.5 hours minimum backup at 32°F (0°C) 9.6 hours minimum backup at -4°F (-20°C)
Surge protection	Solid state surge protection provided on digital input, telephone and AC power circuitry.
Environmental	
Operating temperatures	-4 to 140°F (-20 to 60°C)
Operating humidity	0-90%, non-condensing
Physical	
Dimensions	13.5"W x 11.3"H x 5.65"D (343mm W x 287mm H x 144mm D)
Weight	13 lbs. (5.9 kg)
Enclosure	NEMA 4X rated, fiberglass

Appendix B

Open Collector/TTL Logic Interfaces

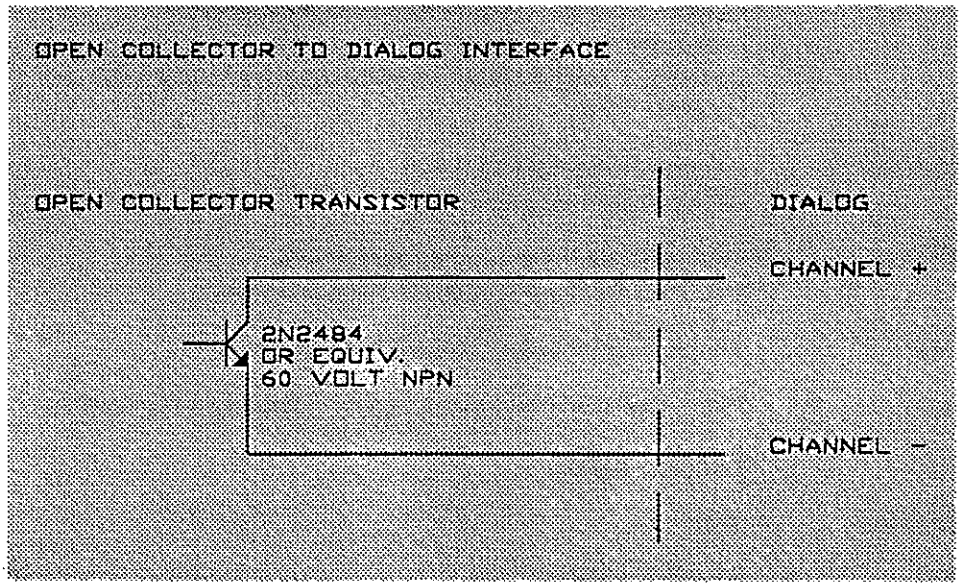

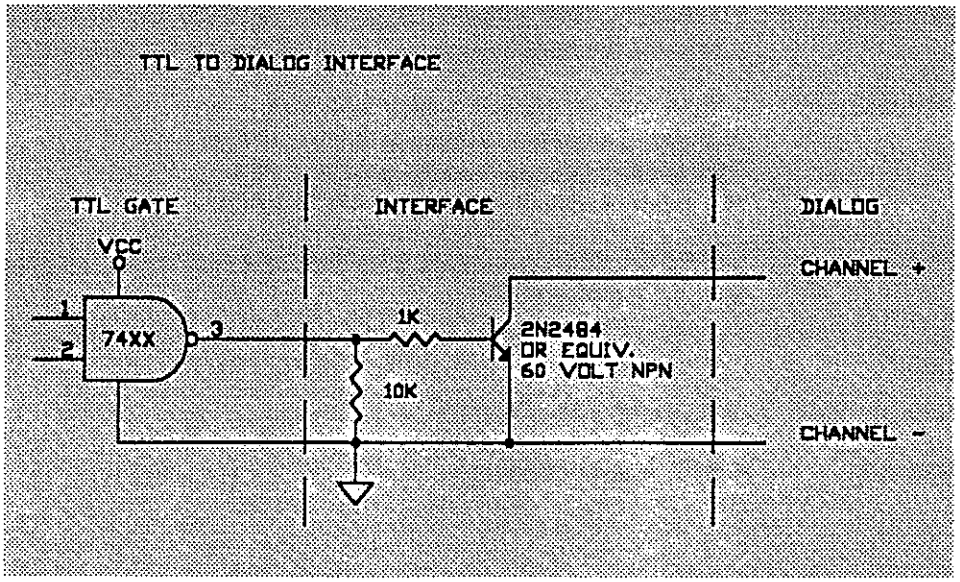

Appendix C

Relay Output Surge Suppression

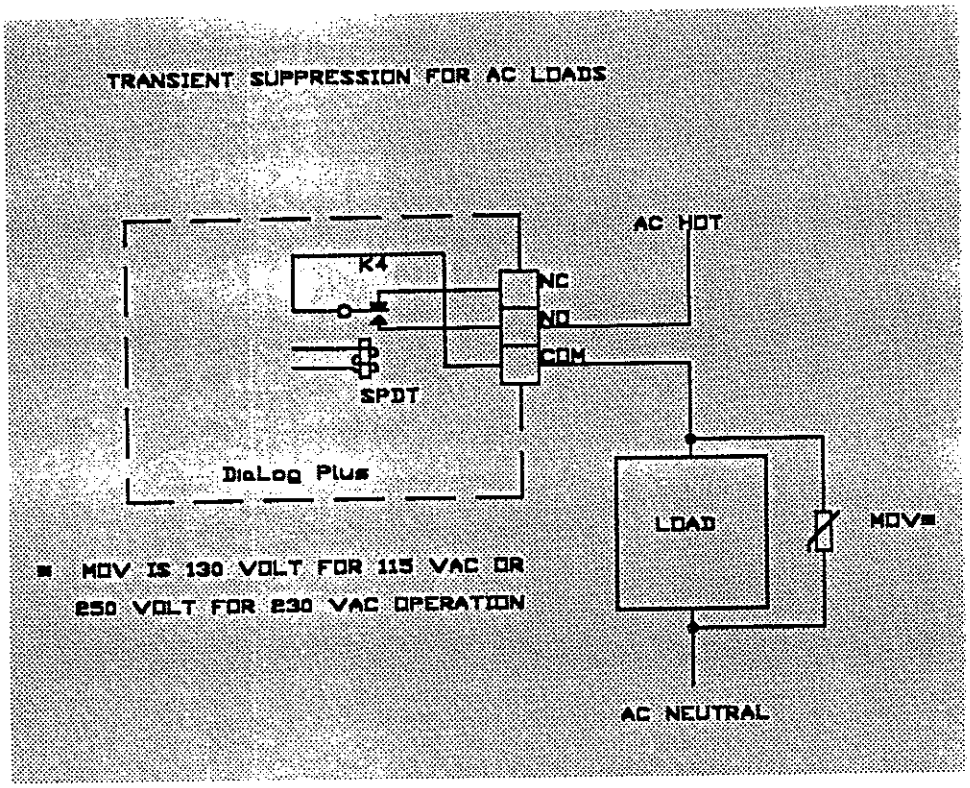

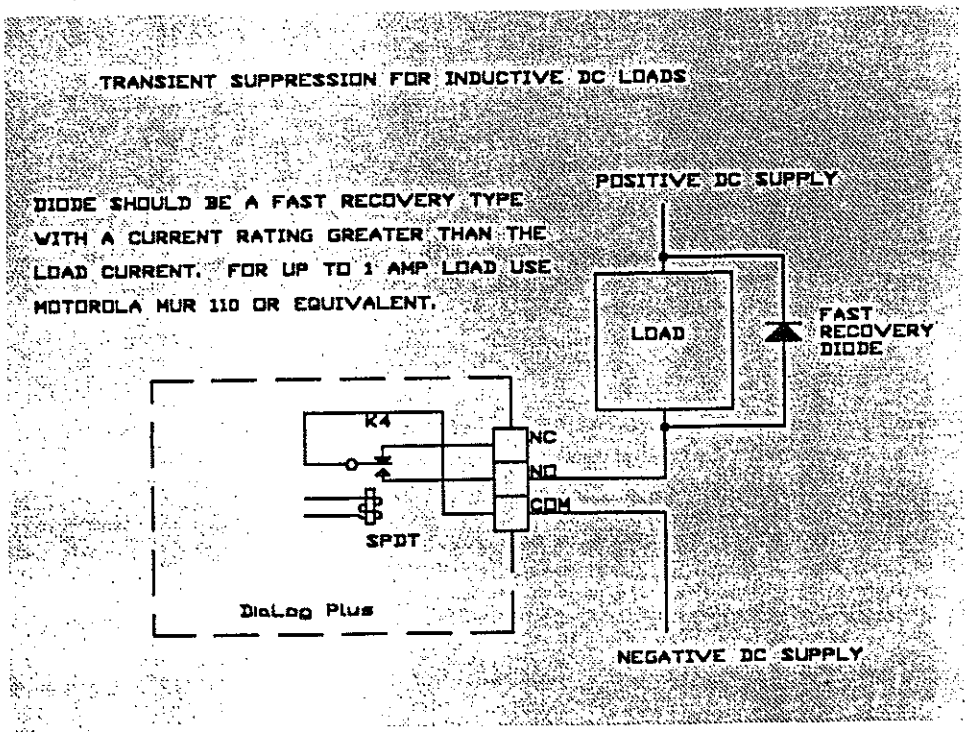

Appendix D

Radio Interface

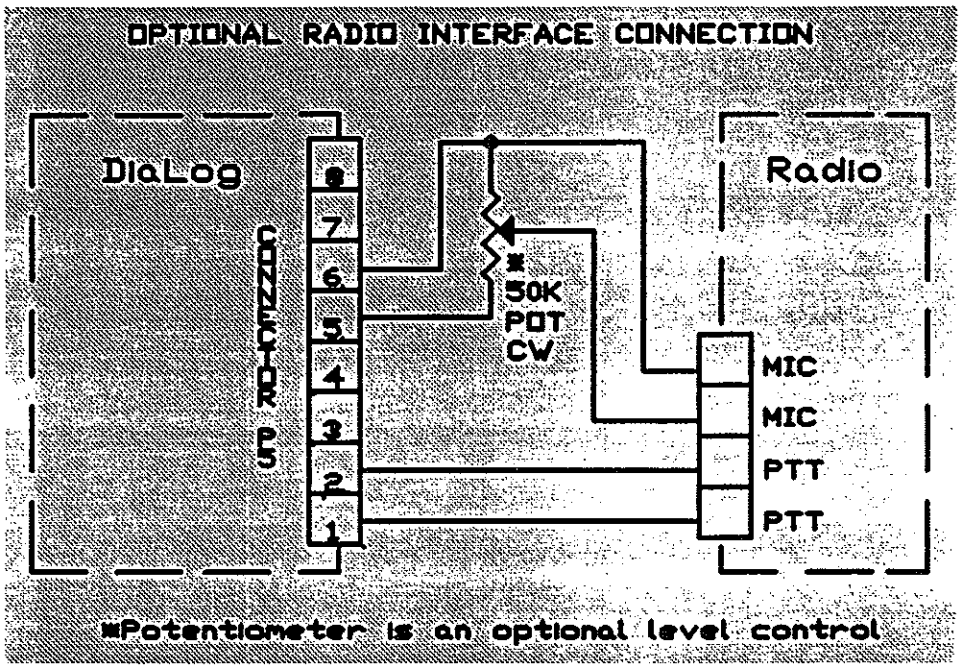

Appendix E

Dimensions

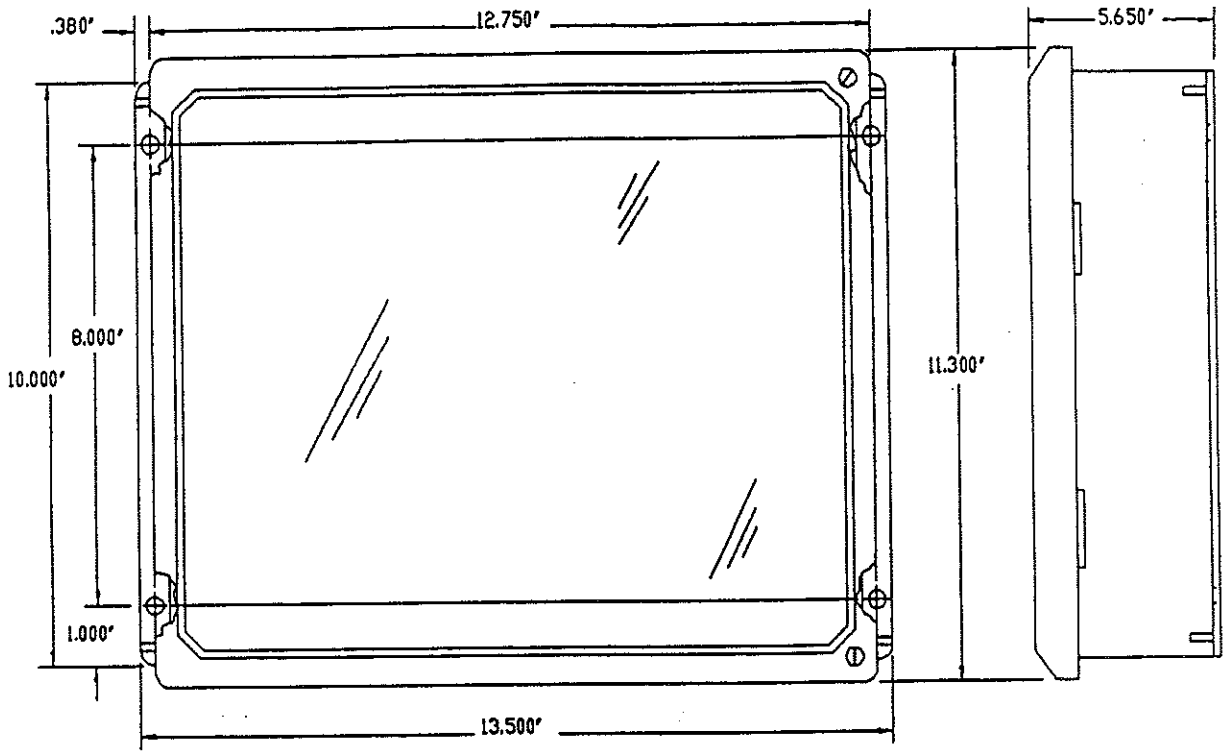

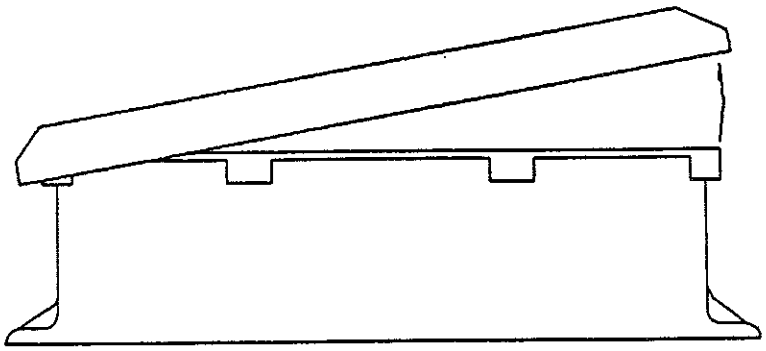

Appendix F

Hardware Warranty and Assistance

Instrument warranty

Kaye Instruments' products are warranted against defects in materials and workmanship for a period of twelve months from the date of shipment. Kaye Instruments will, at its option, repair or replace products which prove defective during this warranty period provided they are returned to our facility in Bedford, Massachusetts. Repairs necessitated by misuse of this product are not covered by this warranty. *No other warranties are expressed or implied, including, but not limited to, the implied warranties of merchantability and fitness for a particular purpose. Kaye Instruments Inc. is not liable for consequential damages.*

Extended warranty

An additional 12 month warranty may be purchased at the time of the original order. All terms of the Instrument Warranty apply to the Extended Warranty.

In-warranty repairs

Customers are requested to discuss their problem with a Kaye Service Representative to insure a prompt and accurate assessment of their needs. Frequently, a problem can be resolved via phone or FAX with minimal inconvenience or delay.

If necessary, the Customer Service Representative will send replacement parts or authorize the return of the instrument to the factory for repair. Instruments serviced in this manner will be repaired and completely tested prior to shipment.

When an instrument is returned to the factory, the customer must prepay the freight charges. Kaye will prepay freight charges for the instrument's return via a comparable shipment method.

If Field Service is required under the warranty, the customer is responsible for travel and living expenses incurred by the Field Service Representative.

After-warranty repairs

Customers are requested to discuss their problem with a Kaye Service Representative to insure a prompt assessment of their needs. Frequently, a customer installed exchange part will solve the problem with minimal inconvenience and expense.

Factory repairs can frequently be completed on a fixed price basis. A base service fee plus labor and materials will be charged in lieu of the fixed repair price upon customer request or if extensive repairs are required.

Customers are requested to obtain a return authorization number prior to returning any instrument for service.

All instruments serviced at the factory will be repaired, updated and completely tested prior to shipment.

Equipment maintenance agreements

An optional DiaLog Plus Maintenance Agreement provides prompt repair or replacement service in the event of lightning damage or other instrument failure from any cause other than abuse. Please contact the Customer Service Department for additional details and prices at (800) 343-4624.

Customer support

Within 90 days of shipment from the factory, installation and initial configuration assistance will be provided at no charge via phone or FAX by a Customer Service Representative.

After 90 days from shipment, technical assistance or consultation will be limited to identification and resolution of instrument failures, unless a Customer Support Agreement has been purchased.

Customer support agreement

An optional Customer Support Agreement provides additional phone or FAX technical assistance for installation or program development. Contact the Customer Service Department for details.

Customer site assistance

Kaye can provide optional on-site personnel to assist with installation, initial operation, and training of plant personnel. Contact the Customer Service Department for details.

Applications assistance

Our Applications Engineers specialize in preparation of optional user defined programs for Kaye products. Please call our Applications Department for details of available services and rates.

Appendix G

Telephone Company rights and obligations

FCC Requirements

The Federal Communications Commission (FCC) has established rules that permit this device to be directly connected to the telephone network. Standardized jacks are used for these connections. This equipment should not be used on party lines or coin lines.

If this device is malfunctioning, it may also be causing harm to the telephone network. This device should be disconnected until the source of the problem can be determined and until repair has been made. If this is not done, the telephone company may temporarily disconnect service.

The telephone company may make changes in its technical operations and procedures. If such changes affect the compatibility or use of this device, the telephone company is required to give adequate notice of the changes. You will be advised of your right to file a complaint with the FCC.

If the telephone company requests information on what equipment is connected to their lines, inform them of:

a. The telephone number this unit is connected to
b. The ringer equivalence number
c. The USOC jack required
d. The FCC registration number

Items b and d are indicated on the label.

The ringer equivalence (REN) is used to determine how many devices can be connected to your telephone line. In most areas, the sum of the REN's of all devices on any one line should not exceed five. If too many devices are attached, they may not ring properly.

Service requirements

In the event of equipment malfunction, all repairs should be performed by our company or an authorized agent. It is the responsibility of users requiring service to report the need for service to our company or to one of our authorized agents. Service can be obtained at:

Kaye Instruments
15 De Angelo Drive
Bedford, Massachusetts
800-343-4624, 617-275-0300
FAX 617-275-9024

Appendix H

FCC Rules, Class B

Modifications to a DiaLog Plus that are not expressly approved by Kaye Instruments could void your authority to use the system.

DiaLog Plus complies with the limits for a Class B digital device, specified in Part 15 of the FCC Rules, which guard against interference with residential radio and television reception. If interference does occur, try these corrective measures:

- Reorient or relocate receiving antenna.
- Increase the distance between the receiver and DiaLog Plus.
- Connect DiaLog Plus to a different circuit from the receiver.
- Consult Kaye Customer Service or an experienced radio/TV technician.

Appendix I

DOC Requirements

Load Number: The Load Number (LN) assigned to each terminal device denotes the percentage of the total load to be connected to a telephone loop which is used by the device, to prevent overloading. The termination of a loop may consist of any combination of devices subject only to the requirement that the sum of the load numbers of all devices does not exceed 100.

Installation and Repair: The Canadian Department of Communications label identifies certified equipment. This certification means that the equipment meets certain telecommunications network protective, operational and safety requirements. The Department does not guarantee the equipment will operate to the user's satisfaction.

Before installing this equipment, users should ensure that it is permissible to be connected to the facilities of the local telecommunications company. The equipment must also be installed using an acceptable method of connection. The customer should be aware that compliance with the above conditions many not prevent degradation of service in some situations.

Repairs to certified equipment should be made by an authorized Canadian maintenance facility designated by the supplier. Any repairs or alterations made by the user to this equipment, or equipment malfunctions, may give the telecommunications company cause to request the user to disconnect the equipment.

Users should ensure for their own protection that the electrical ground connections of the power utility, telephone lines and internal metallic water pipe system, if present, are connected together. This precaution may be particularly important in rural areas.

Caution: Users should not attempt to make such connections themselves, but should contact the appropriate electric inspection authority or electrician, as appropriate.

Appendix J

Canadian Emissions Regulations

This digital apparatus does not exceed the Class B limits for radio noise emissions from digital apparatus set out in the Radio Interference Regulations of the Canadian Department of Communications.

Le présent appareil numerique n'emet pas de bruit radioélectriques dépassant les limites applicables aux appareils numeriques de la class B prescrites dans le Règlement sur le brouillage radioélectrique édicte par le ministère des Communications du Canada.

Appendix L

Battery Test Procedure and Reserve Power Estimates

To check the backup battery's available reserve:

- Press 1 to put DiaLog into Bypass mode.
- Make sure the power switch is On.
- Disconnect primary power.
- With a DC voltmeter, measure across the battery terminals. Hold the meter leads on the terminals for two minutes or longer, until the reading stabilizes. The reading is stable when the change over one minute is 0.1 VDC or less.
- On the appropriate chart below, match the stable voltmeter reading with the estimated available reserve power.

After you complete the test, reapply primary power and press 2 to put DiaLog into Run mode.

Standard Backup Battery, 6.5 Ah	
DC reading	*Estimated reserve power at 68-104°F, in hours (±10%)*
6.4	16
6.3	14
6.2	12
6.1	10
6.0	8
5.9	6
5.8	3
5.7	1
5.6	0.5
5.5	0.0

Extended Backup Battery, 10 Ah	
DC reading	*Estimated reserve power at 68-104°F, in hours (±10%)*
6.4	24
6.3	21
6.2	17
6.1	13
6.0	10
5.9	7
5.8	4
5.7	1
5.6	0.5
5.5	0.0

Glossary

Access Code	4-digit password that protects Bypass (programming) mode.
ACK key	Acknowledges all alarms simultaneously from front panel.
Acknowledge, remote (*, 8 or 9 key)	From a remote telephone, acknowleges channel alarm message(s) delivered by DiaLog Plus.
Between Calls Delay	Number of seconds DiaLog waits between alarm call-outs. During this delay, a call to the system can acknowledge all alarms if Call In Acknowledge is enabled.
BKSP key (*0)	Deletes previous character in an entry.
Bypass mode	Programming mode. DiaLog must also be in Bypass mode for you to request configuration printouts, listen in from a remote telephone, or make a telephone call from the front panel.
Bypass to Run Delay	Number of minutes DiaLog remains in Bypass mode before automatically switching into Run mode.
Call In Acknowledge	If this feature is enabled, DiaLog waits for a return phone call acknowledging an alarm, before it calls the next number on the channel Telephone List.
Call on Limit	Channel mode in which alarm call-out is initiated when the channel's Totalizer or Duration Counter reaches a programmable limit.
Call Out	At front panel, press 5 to use DiaLog as a speaker phone.
Channel	Reads the status of an input and holds programmable alarm notification instructions.

Channel Alarm Delay	Number of seconds an alarm condition must be present before DiaLog begins its programmed call-out sequence. Designed to prevent false alarms due to momentary abnormalities.
Channel alarm priority	Determined by the Telephone List assigned to the channel. List 1 has the highest priority and List 8 the lowest. If a channel with a higher priority goes into alarm while the system is calling out on a lower priority alarm, DiaLog interrupts the lower priority call-outs until it notifies someone of the higher priority alarm and receives acknowledgement.
Channel State	Normal state of the contact at a digital input channel: Normally Open or Normally Closed.
Channel Messages	Programmable Alarm or On and Normal or Off messages spoken by DiaLog on alarm call-outs and in System Status reports. Also includes factory-programmed messages for the value of the Totalizer and Duration counters, and the message for channels that are disabled.
Channel Mode	One of four programmable modes: *Disabled* (channel does not initiate alarm call-outs and is not included in System Status reports), *Status Only* (does not initiate call-outs but is included in System Status reports when in off-normal state), *Call on Alarm* (initiates call-outs when in off-normal state), and *Call on Limit* (initiates call-outs when a counter limit is reached).
Channel Telephone List	A list of telephone numbers assigned to a channel. DiaLog calls these numbers when the channel goes into alarm.
Channel Limits	Programmable limits on the Totalizer and Duration counters associated with each channel.
CLEAR key (*1)	Cancels programming entry and retains present selection.
Clock Format	Programmable 12-hour or 24-hour time format for DiaLog's status messages, voice prompts and optional printed log.
Counter Resets	Feature that lets you perform on-the-fly, immediate resets of channel Totalizers or Duration Counters to zero or another value.
Date Format	Programmable format that determines how DiaLog speaks and prints day, month and year.
Disarmed/Armed Schedule	Programmable timetable for disabling alarm call-outs. Separate schedules for weekdays, weekends and holidays.
Delay character (*9)	Inserts a 2-second delay in telephone number.

Dial Tone Detect character (*8)	Instructs DiaLog Plus to wait for a dial tone before dialing additional characters.
Digital input	Digital high/low electrical signal indicating Closed/Open (ON/OFF) state of an external relay.
Duration Counter	Firmware counter associated with each channel that tracks the number of minutes the channel is in off-normal state.
ENTER (#)	At a remote phone, lets you start programming. During a programming sequence, retains present selection or enters data (not required with maximum length entry).
Global command (*4)	Key sequence that lets you program current day/channel and all successive days/channels with the same value.
Holiday Calendar	Programmable list of up to 20 days which DiaLog treats as holidays for the purpose of Status Notification and Disarmed/Armed Schedules.
HOME key (*6)	In Bypass mode, cancels entry, retains present selection and exits to "System ready; enter selection" prompt. In Run mode, at front panel, interrupts alarm call-outs.
Listen In	Lets user at remote Touch-Tone telephone listen in to sounds picked up on DiaLog's internal microphone.
Memory Clear	Startup procedure to restore all parameters to factory settings.
Message Repeats	Programmable number of times DiaLog repeats message on an alarm call-out.
MIC key	Selects microphone pickup level.
Modem character (*3)	When programmed into a number on a DiaLog telephone list, lets DiaLog communicate via modem with a PC or terminal.
Normally Open/ Normally Closed	Normal state of each input channel, individually programmable.
OFF HOOK/RING	Indication at front panel and optional printer that DiaLog is making or receiving a call.
Pager character (*7)	Inserts signal in telephone number that tells DiaLog it is calling a display pager.
PHONE FAULT	Indication that DiaLog's telephone line is out of order.
Radio relay	Closes when a channel goes into alarm if DiaLog encounters the Radio Transmission character in the channel Telephone Number. Turns on a transmitter or annunciator.

Radio transmission character (*5)	Inserts signal in telephone number that tells DiaLog to turn on the relay component of the optional Radio Interface.
Redial After Acknowledge Delay	Amount of time DiaLog waits, after receiving acknowledgement of an alarm, for the alarm to clear before it restarts the notification process.
Redial Number	If this feature is enabled, DiaLog redials a busy number after the Between Calls Delay.
Relay Output	Built-in relay. By default, automatically energizes whenever a channel goes into alarm. Can be programmed as User Controlled.
RESET key (*2)	At the "Enter new selection" prompt, restores factory setting and exits to previous prompt. At other prompts, exits to previous prompt.
Ring Count	Programmable number of rings DiaLog detects before answering an incoming call.
Run mode	Normal operating mode.
Setup	Configuration parameters that are generally set just once after the system is installed.
State Change List	Record of the number of times channels have changed state from Normal to Alarm, for example.
System Identification Message	Programmable voice message identifying system, for example, by location or function.
System Identification Number	Up to 18 characters 0-9, A-D, * or # used to identify system with call-outs to a display pager or on printed log.
Status Notification Schedule	Programmable timetable for system status call-outs. Up to four call-outs per day; separate schedules for weekdays, weekends and holidays.
Status Only	Channel mode in which channel does not initiate alarm call-outs but is included in System Status reports when it is in an off-normal state.
System Status	Report on system mode (Bypass or Run), Disarmed/Armed status and channels in alarm.
Telephone Lists	Number of lists: 8 lists of 8 telephone numbers, or 4 lists of 16 numbers.
Totalizer	Firmware counter associated with each channel that tracks the number of times a channel goes from normal to off-normal state.

Index

* tone special character 40
# tone special character 40

A

A tone special character 40
A-D keys 24
AC power, connecting 8
AC POWER indicator 12
Access Code 40
    and Memory Clear procedure 4
ACK key 23, 72
Acknowledging alarms
    at a remote telephone 19, 72
    at the front panel 23, 72
Alarm Delay, channel 60
Alarm message(s) 14, 55
Alarm notification
    cancelling 72
    disabling (disarming the system) 48
Alarm priority
    managed by DiaLog Plus 19
    determined by Telephone List 30, 59
Answering machines 19
Armed/Disarmed Schedule 48
Audio settings
    microphone 35
    speaker 35

B

B tone special character 40
Backup battery 20
    capacity 81
    messages 21
    recharging 21
    test procedure 94
BATTERY indicator 12
Between Calls Delay 44
BKSP key (*0) 23
Busy number, calling back 18, 32
Bypass mode 12, 17
    entering 74
Bypass to Run Delay 44
BYPASS/RUN indicator 12

C

C tone special character 40
Call In Acknowledge 31
Call on Alarm (channel mode) 58
Call on Limit (channel mode) 58
Call Out (using DiaLog as a speaker telephone) 75
Canadian emissions regulations 91
Change State (Relay Output) 64
CHANNEL alarm indicators 12
Channel Configuration parameters
    Alarm Delay 60
    Change State 64
    Channel Messages 55
    Channel Mode 58
    Channel State 54
    configuration report, printing 77
    Global command (*4) 54
    Limits 61
    Output Type 63
    Resets 62
    selecting a channel 53
    Telephone List 59
Channel Limits 61
Channel Messages 55
Channel Mode 58
Channel State 54
CLEAR key (*1) 23, 24
Clock Format, programming 30

Counter Resets
and clearing an alarm 59
description 19
at power down 21
manual reset 62

D

D tone special character 40
Date and Time 39
reset to default at power down 21
Date/Time Format 30
DC operation 9
Delay special character 40
Delays, programming
Between Calls 44
Bypass to Run 44
Redial after Acknowledge 44
Diagnostic tests 92
Dial Tone Detect special character 40
Digital inputs
4-channel or 8-channel versions 17
connecting 6
loop resistance 7
recommended wiring 7
Dimensions 81, 85
Disabled (channel mode) 58
Disarmed/Armed Schedule 48
DOC requirements 90
Duration counter, channel 19
limits, programming 61

E

Emissions regulations, Canada 91
Enclosure
making holes for the wiring 5
Recommended Hole Area template 5
rating 5
ENTER key (#) 23, 24
Event printout 20, 72
External 12 VDC operation 9

F

Factory settings 22
restoring all with Memory Clear 4
FCC
Class B compliance 89
registration 81
Firmware level, requesting 34
Front panel indicators 12

G

Global command (*4)
and Channel Configuration 54
and Disarmed/Armed schedules 49
and Status Notification 46

H

Hardware warranty 86
Help
voice prompts as you program 28
Holiday Calendar 51
checking 52
exiting 51
HOME key (*6) 23

I

I/O Board 4
Installing DiaLog Plus 3

K

Keypad 23-24

L

LED indicators 12
Limits, channel 61
Listen In 76
Log of DiaLog Plus events 20

M

Memory Clear procedure 4
Message Repeats 43
Messages
channel Alarm/On, recording 55
channel Normal/Off, recording 55
factory-programmed or customized 17
Power Failure 55
Relay Output 55
restoring factory-programmed 37
System Identification, recording 37-38
MIC key 23
Microphone, using 14
Microphone Level 35
Modem special character (*3) 40

N

Noise immunity, providing 8

O

OFF HOOK/RING indicator 12, 21
Open collector inputs 7
circuit information 82
Operating temperatures 81
Operating DiaLog Plus 71
Output Type (Relay) 63

P

Pager
programming for 42
special character 40
PHONE FAULT indicator 12, 21

Power failure channel (Channel 0) 17
messages 55
Power, primary
indicator 12
requirements 81
switch 4
Power up diagnostic tests 92
and Memory Clear 4
Print Configuration Report 77
Printer
buffer 20
cable pin assignments 10
connecting 10
Printer port
Baud Rate 33
Data Bits 33
factory settings 11
Parity 33
Stop Bits 33
Programming
Audio Settings 35
Channel Configuration parameters 53
checking your entries 28
four main areas 24
front panel 23
general procedures 24
keys 23
minimum 11
remote 23, 28
restarting after an interruption 28
saving at switch to Run mode 13, 17
selections (Table 3) 25-27
Setup parameters 29
shortcut keys 23
starting 28
System Configuration parameters 36
voice prompts 24
Programming forms 65-70

Q

Quick Start 11

R

Radio interface (optional)
connecting 10
programming DiaLog for 41
Radio Transmission special character 40
Recommended Hole Area template 5
Redial after Acknowledge Delay 44
Redial Number 32
Relay Output
connecting to external device 7
description 7, 17
programming 63
Setup (Alarm or User Control) 34
surge suppression 83
type (User or Time Latched) 63
Remote programming 23, 28
template 23
Reset Channel Counters 62, 79
Reset State Change List 77-78
RESET key (*2) 26, 53
Ring Count 43
Ringer equivalence 81, 88
Run mode 12, 17
Bypass to Run Delay 44
entering 74
and saving your program 13, 17
valid commands 74

S

Service requirements 86
Setup 29
Call In Acknowledge 31
configuration report, printing 77
Date/Time and Clock Format 30
Firmware version request 34
Printer Port 33
Relay Output 34
Redial Number 32
Telephone Lists 30
Speaker
adjusting volume 9
turning off 35
Specifications 81
State Change List 77
Status Notification Schedule 45
weekend schedules 48
Status Only (channel mode) 58
System Configuration 36
Access Code 40
configuration report, printing 77
Date and Time 39
Delays 44
Disarmed/Armed Schedule 48
Holiday Calendar 51
Message Repeats 43
Ring Count 43
Status Notification Schedule 45
System Identification 37
System Identification
message 37
number 37
System Status reports 20
requesting 72

T

Telephone
connecting 6
dialing out manually 21, 75
line test 21

Telephone Company rights and
obligations 88
Telephone List, channel
and alarm priority 18
configuration report, printing 77
programming 59
targeting alarms with 18
Telephone Lists, number of 13
programming 30
Telephone Numbers 13, 40
special characters 40
Terminal, connecting to RS-232 port 10
Testing the system 15
Time Format, programming 30
Totalizer limits 61
TTL logic inputs 7
circuit information 82

V

Voice prompts 24, 28
interrupting 28
Voltage, selecting 8

W

Warranty 86
Wiring 5-10

B

Appendix B

GEM-500 Gas Extraction Monitor

Operation Manual

"CP ____"

Please Return To
Field Equipment Services
Cambridge, MA 02142

© 1993 Landfill Control Technologies, Corporate Headquarters 6055 E. Washington Blvd., Commerce, CA 94110 U.S.A. GEM-500 is a product trademark.

Table of Contents

Chapter 1-Getting Started **1**
Unpacking the GEM-500 1
Attaching the Hose Assembly 1
Quick Connect Fittings 1
Watch the GEM-500 Video 2
Must Do's Before Using the GEM-500 2
Calibration Gases 2
Special Keying Functions 2
Entering an ID code with Letters and Numbers 2
Backspace Function 2
GEM-500 Keyboard and Port Descriptions 3

Chapter 2-Field Calibration **5**
Calibration Gas/Span Gases 5
Zero Methane 5
Span Methane 5
Span Carbon Dioxide 5
Zero Oxygen 6
Span Oxygen 6
Equipment 6
Setting Up the Equipment 7
General Utilities KEY 5-Gas Calibration 7
Methane (CH4) Calibration - Zero CH4 8
CH4 Calibration - CH4 Span 10
Carbon Dioxide (CO2) Calibration 12
Oxygen (O2) Calibration - Zero O2 14
O2 Calibration - O2 Span 16
Factory Settings Calibration 18
After Completing Gas Calibrations 20

Chapter 3-Using Menu Screens **21**
Starting Up the GEM 21
GEM-500 Menu Screens Tree 22
Review of the Main Menu and Sub-Menu Screens 23
General Utilities 23
Read Gas Levels 23
View/Print Data 23
Download Data 23

Chapter 4-General Utilities Functions **25**
General Utilities Menu 25
General Utilities Screen Tree Diagram 26
General Utilities KEY 1-Check Time/Date 27
General Utilities KEY 2-Zero Pressure 28
General Utilities KEY 3-Memory 30

© 1993 Landfill Control Technologies, Corporate Headquarters 6055 E. Washington Blvd., Commerce, CA 94110 U.S.A. GEM is a product trademark.

General Utilities KEY 4-USA/Metric Units 31
General Utilities KEY 5-Gas Calibration 32
General Utilities KEY 6-Gas Alarm 32
General Utilities KEY 7-ID Maintenance 33

Chapter 5-Read Gas Levels 39
Warning 39
GEM-500 Hose and Wellhead Connection 39
LANDTEC Horizontal Accu-Flo Wellhead 40
LANDTEC Vertical Accu-Flo Wellhead 40
Read Gas Levels Screen Tree Diagram 41
Read Gas Levels Menu 41
Read Gas -Logging Function 46

Chapter 6-View/Print Data 49
View Data 49
Print Data 51
Output - Print Report Format 54

Chapter 7-Download Data 55
Installing the Download Program on the Host Computer 55
Starting the Download Program on the Host Computer 55

Chapter 8-GEM-500 Well ID Manager 59
User Control 59
Connecting the Computer to the GEM 59
Well ID Function 59
- Create New ID Set 59
- Edit ID Information 59
- Send IDs to GEM 60
- Receive IDs from GEM 60
- Save IDs to Disk. 60
- Load IDs from Disk 60
- Clear Function 60
- Clear IDs in GEM 60
- Clear readings in GEM 60
- Clear User Defined Comments in GEM 60

Show GEM Memory Statistics 61
Configure 61
- Configuration File 61
- Set Units to Imperial/Metric 61
- Set Data Directory 61
- Set default COM Port 61
- Sort Well IDs 61

User Defined Comments 61

Chapter 9-Maintenance 63
Servicing 63
Cleaning 63
Sunlight and Heat 63

© 1993 Landfill Control Technologies, Corporate Headquarters 6055 E. Washington Blvd., Commerce, CA 94110 U.S.A. GEM is a product trademark.

Dustcaps 63
Filters 63
Storage and Travel 63
Battery Charging 63
Battery Shut-Off 64
Battery Low Symbol 64
Automatic Power-Off 64
Emergency Battery Power 64

Chapter 10-Troubleshooting 65
The GEM-500 does not turn on or operates erratically 65
The unit may be too hot 65
The batteries are so low that they will not display any screens 65
The GEM-500 Displays ****** or >>>> in Some Fields 65
The Screen Says "FLOW FAIL" With a Continuous Audible Warning 65
The Carbon Dioxide Readings Drift Erratically 65
The Readings Taken by GEM-500 are Not What is Expected 65

Chapter 11-Measurement Units and Specifications 67
Measurement Units 67
Operating Temperature 67
Range and Resolution 67
Accuracy 67

Chapter 12-Field Operations 69
Landfill Gas Generation 69
Subsurface Fires 69
Techniques for Controlling Landfill Gas 69
Controlling by Wellhead Valve Position 69
Controlling by Wellhead Vacuum 69
Controlling by Gas Composition 70
Controlling by Flow Rate 70
Wellfield Monitoring 70
Typical Field Readings 70
Abbreviated Field Readings 71
Wellfield Adjustment Criteria 71
Establishing Target Flows 72
Wellfield Optimization 72
Migration Control—Dealing with Poor Methane Quality 72
Wellfield Adjustment—Purpose and Objectives 72
LANDTEC Technical Tips 73

Chapter 13-Quick Start Screen Tree 75

© 1993 Landfill Control Technologies, Corporate Headquarters 6055 E. Washington Blvd., Commerce, CA 94110 U.S.A. GEM is a product trademark.

© 1993 Landfill Control Technologies, Corporate Headquarters 6055 E. Washington Blvd., Commerce, CA 94110 U.S.A. GEM is a product trademark.

Chapter 1-Getting Started

Unpacking the GEM-500

The GEM-500 unit is normally shipped in a protective hard case with a foam interior. This offers excellent protection. When properly sealed, the case is watertight. There is a pressure relief valve by the handle on the case. Normally this is kept closed. If there is a change in elevation, the case may not open until the pressure is equalized by turning the pressure relief valve.

We strongly recommend that the GEM-500 be transported in its protective case. The hard case has room to store all the components for the GEM-500 and we recommend that they be kept together. When shipping a GEM-500 back to LANDTEC for calibration or service, always ship it in this hard case unless LANDTEC sends you a special protective Styrofoam shipping unit.

Carefully unpack the contents of the GEM-500, inspect and inventory them. The following items should be contained in your package:

- Hard carrying case (when opening the hard case, it may be necessary to open the pressure relief vent)
- The GEM-500 unit
- GEM-500 Operation Manual
- Warranty/Registration Card and other instructional information
- Soft carrying case with replaceable protective window and carrying strap
- External (striped) sampling hose assembly (5 ft.) with external filter/water trap assembly
- Clear 1/4" Tygon pressure tubing sampling hose (5 ft.)
- Spare internal filter element
- Chrome-plated brass male connector (hose barb) connects to clear tubing
- Polypropylene male connector (hose barb) connects to striped tubing
- Spare external filter element
- 110-volt Nickel-Cadmium battery charger with special charging plug
- VHS video cassette - "Using the GEM-500"
- GEM-500 download software disk on 3 1/2 inch floppy disk (optional)
- RS-232 serial cable for computer/printer data downloading (optional)
- Temperature probe (optional)

Immediately notify shipper if the GEM-500 unit or accessories are damaged due to shipping. Contact LANDTEC if any items are missing. If you have any questions, please contact LANDTEC technical support at (800) 821-0496 or (213) 722-8202. Complete the Registration/Warranty Card and return it to LANDTEC. The model and serial numbers are located on the back of the GEM-500 unit.

Attaching the Hose Assembly

The GEM-500 hose assembly comes fully assembled but it needs to be connected to the GEM-500.

Connect the striped hose with the external filter/water trap assembly to the static pressure/sampling port on the GEM-500 (See Figure 1.1). The port on the top left corner of the GEM-500.

Connect the clear tubing to the impact pressure port on the GEM-500 (See Figure 1.1). This port is located on the bottom left corner of the GEM-500. As previously warned, DO NOT block the exhaust port (See Figure 1.1).

Quick Connect Fittings

The quick connect fittings will simplify the taking of wellfield readings. They are easy to install in your landfill gas extraction system and on perimeter probes. Many different types are available. LANDTEC carries fittings used on its equipment for your convenience.

The GEM-500 comes with quick connect fittings for the Accu-Flo™ wellhead. Connect the chrome male connector to the end of the clear tubing. Connect the polypropylene (the almond colored) fitting that has a male connector to the striped tubing.

© 1993 Landfill Control Technologies, Corporate Headquarters 6055 E. Washington Blvd., Commerce, CA 94110 U.S.A. GEM-500 is a product trademark.

Watch the GEM-500 Video

We strongly recommend that you watch the video provided—Using the GEM-500™ before proceeding.

Must Do's Before Using the GEM-500

Read Chapter 3 of this manual.

Proper operation of the GEM-500 requires the following functions to be completed before proceeding.

- Charge the unit with the battery charger
- Check the Time/Date
- Perform a Zero Pressure
- Field Calibrate the unit

Calibration Gases

Calibration gases are required to field calibrate the GEM-500. Portable Calibration Gas Kits and 12-unit cylinder cases are available from LANDTEC or can be obtained from a specialty gas company. (See Chapter 2-Field Calibration)

Special Keying Functions

Entering an ID code with Letters and Numbers

Use blue toggle key to shift back and forth between number mode and letter mode. When in number mode, use number KEYS to enter numbers. When first switched to letter mode, use arrow KEY 1-UP ARROW or KEY 6-DOWN ARROW to scroll to desired letter, then press KEY 0 to enter the letter on the display. Repeat this process for all letters. Before any new ID code can be entered, the first four character spaces will be filled with the characters used in the previous ID code. If different characters are desired, remove these characters by using the backspace function below.

Backspace Function

To change or correct an entry error use the KEY 0 as a backspace by holding it down for one second. In normal use, this key is quickly pressed and released.

© 1993 Landfill Control Technologies, Corporate Headquarters 6055 E. Washington Blvd., Commerce, CA 94110 U.S.A. GEM-500 is a product trademark.

GEM-500 Keyboard and Port Descriptions

Figure 1.1

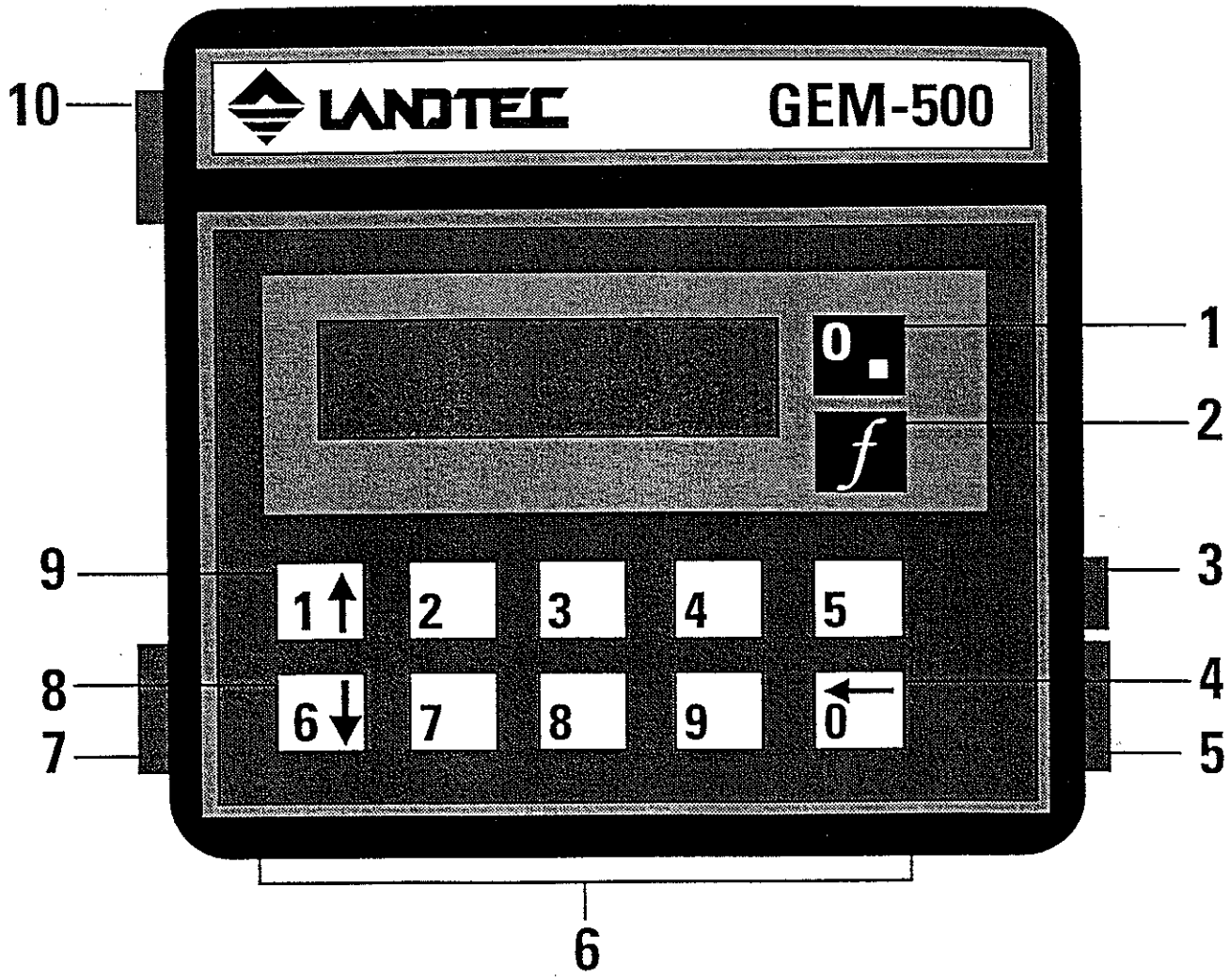

1. Red On/Off Key—Turns unit on or off.
2. Blue Number/Letter Toggle Key—Enables well ID code to be entered by toggling between number and letter mode.
3. RS232 Port—Used for battery recharging, data downloading and temperature readings.
4. Backspace/Exit Key—Acts as backspace key when pressed and held for one second, to correct for user entry of wrong number/letter, returns to previous procedure or steps back one layer of menus, usually to the main menu screen. The last function of this key is similar to the escape key in many computer programs.
5. Exhaust Port—This port must be kept clear. If blocked while operating, over pressurization and damage to internal components and case could occur.
6. Numeral Keys—Enters numerals 1 through 9.
7. Impact Pressure Port—Measures impact pressure when connected to wellhead impact pressure port (upstream connection for orifice) by tubing.
8. Cursor-Down Key—Enters numeral 6, and scans lines of information or screens.
9. Cursor-Up Key—Enters numeral 1, and scans ines of information or screens by moving up or toward the beginning of a list or alphabet.
10. Static Pressure/Sampling Port—Measures static pressure when connected to wellhead staticpressure port by tubing. Inlet for gas sampling instruments.

© 1993 Landfill Control Technologies, Corporate Headquarters 6055 E. Washington Blvd., Commerce, CA 94110 U.S.A. GEM-500 is a product trademark.

© 1993 Landfill Control Technologies, Corporate Headquarters 6055 E. Washington Blvd., Commerce, CA 94110 U.S.A. GEM-500 is a product trademark.

Chapter 2-Field Calibration

Field Calibration is menu-guided and can be completed in about ten minutes. The pump remains running during the calibration procedure to streamline the procedure and conserve calibration gas. The GEM-500 contains a calibration map which is accessed by its microprocessor for baseline reference data. This reference data was programmed into the GEM-500 during the factory calibration using various traceable gas mixtures in an environmental chamber. At any time, the GEM-500 can be reset by returning to the "factory settings." This clears the GEM-500 of any user calibration settings and restores the GEM-500 to its original factory calibration.

The factory calibration has been designed to give the best possible results over a wide range of conditions. However, the instrument's accuracy can be improved in specific operating ranges by performing a "field calibration."

Most field instruments are calibrated or adjusted prior to taking a series of gas or pressure readings. They may also be checked for calibration during the reading and after readings are taken in order to verify the accuracy of the data collected.

It is important to field calibrate the GEM-500 on-site after the instrument has stabilized at working temperature. For this reason, a GEM-500 that was calibrated in the cool of the morning may not read as accurately at the hottest part of the day.

Note: Field calibration of the GEM-500 will improve the data collected in the range of the calibration gases used. Less accurate readings of concentrations outside the calibrated range may occur. For example, a GEM-500 field-calibrated using 60% CH_4 and 40% CO_2 will give improved readings for the higher concentrations, but may provide less accurate readings at very low concentrations (which are not common in LFG).

Calibration Gas/Span Gases

Field calibration requires two calibration gas mixtures; a methane/carbon dioxide mixture (50% CH_4 and 50% CO_2) and a oxygen/carbon dioxide mixture of less than 6% oxygen (low levelsof oxygen.) As with methane, the closer the composition of the calibration gas to the expected conditions, the greater the accuracy. A 5/95 mixture of oxygen and carbon dioxide (5 % O_2 and 95% CO_2) is typical. Any calibration gas mixtures near the expected measurement range that is free of oxygen can be substituted for the first calibration gas mixture. Any calibration gas mixture with a 2% to 5% concentration of oxygen (O_2) may be substituted for the second mixture.

Zero Methane

Calibration of the GEM-500 starts by establishing the bottom point of the methane gas curve. The methane (CH_4) is zeroed prior to taking readings at the start of each day. To set a zero point, the GEM-500 is given a methane-free gas sample—often air is used. This establishes a zero point. This function significantly improves the GEM-500's CH_4 accuracy over the entire range. It is essential that the gas analyzer be clear of CH_4 at the time of zeroing. Care must be taken if the GEM-500 is to be zeroed on a landfill site because there are situations where methane, which is odorless and colorless, could be in the atmosphere.

After the Zero methane function, the GEM-500 recalculates 16 methane calibration points on its methane gas curve and stores the revised data in its memory. The GEM-500 does not need to be have the CH_4 zeroed every time it is switched on because the most recent calibration data is stored in protected memory.

Span Methane

A field calibration spans the methane range prior to taking readings at the start of each day. The best results are obtained after the instrument has stabilized at its working temperature. The procedure alters the methane calibration at all concentrations and stores the revised data in protected memory. Depending on which CH_4 range is spanned, sampling errors at a much higher or lower concentration may occur.

Note: The Zero Methane should be set before setting the Methane Span.

Span Carbon Dioxide

Field calibration spans the CO_2. It should be spanned prior to taking readings at the start of each day after the instrument has stabilized at its working temperature. The procedure alters the calibration at all concentrations and stores the revised data in protected memory. Landfill gas contains high concentrations of CO_2. As with methane, there are similar sampling errors outside the range spanned.

© 1993 Landfill Control Technologies, Corporate Headquarters 6055 E. Washington Blvd., Commerce, CA 94110 U.S.A. GEM-500 is a product trademark.

Zero Oxygen

This function is essential where low concentrations of oxygen are expected (below 6%). Normally there is very little oxygen in LFG. A procedure explained below zeroes the oxygen prior to beginning daily gas sampling. This establishes the zero point of an oxygen curve that is stored in the GEM-500's permanent memory.

Span Oxygen

The oxygen calibration map contains two span curves, one for oxygen below 7% and one for oxygen above 7%. The proper curve is automatically selected. If a calibration gas with less than 7% oxygen is used, the lower span curve is adjusted. If the calibration gas has more than 7% oxygen, the higher calibration curve is adjusted. Due to the resolution of the GEM-500's processor at higher concentrations, the GEM-500 may not display the exact concentration entered. As discussed below, this effect can be reduced by altering the entered value so that the displayed value is as close to the actual value as possible.

Note: The O2 Oxygen should be set before setting the Oxygen Span.

Equipment

To perform a field calibration, the following items are required.

1. Cylinder of 50/50 (50% CH4 and 5B0% CO2) calibration gas
2. Cylinder of 5/95 (5% O2 and 95% CO2) calibration gas
3. Pressure regulators for the above cylinders capable of regulating in the range of 0 - 5 psig fitted with connectors suitable for 1/4" Tygon tubing.
4. Regulator/flowmeter capable of measuring in the range 60 - 600 cc per minute maximum with fittings suitable for 1/4" Tygon tubing.
5. Interconnecting lengths of 1/4" Tygon tubing.

All this equipment is available from LANDTEC. Other types of tubing can be used but the connections must be airtight and secure. The equipment is set up as shown in Figure 2.1.

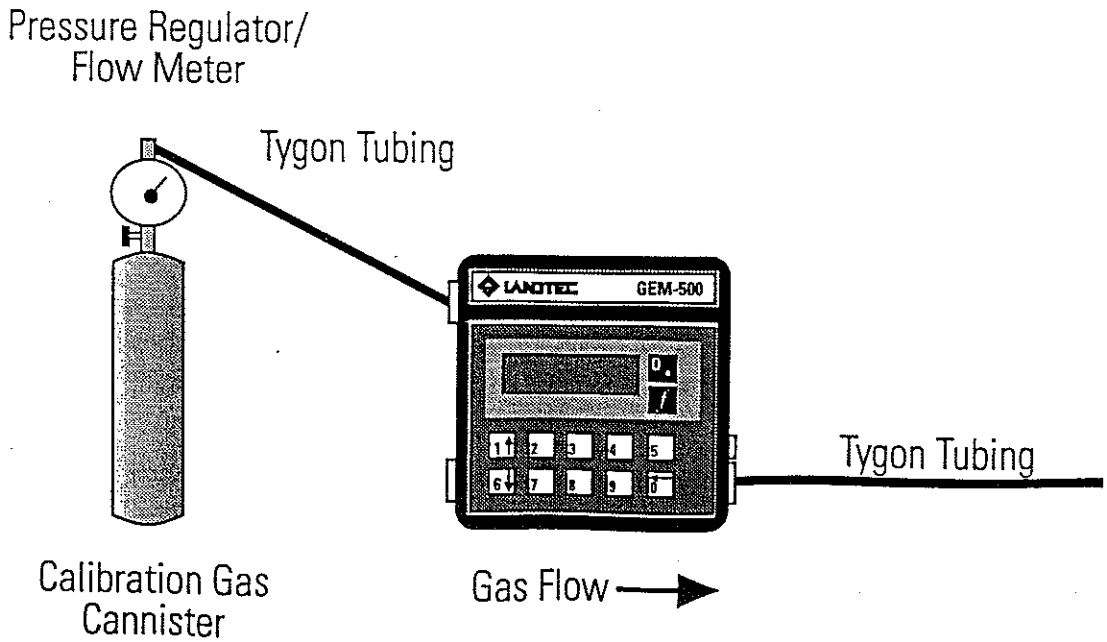

Figure 2.1

© 1993 Landfill Control Technologies, Corporate Headquarters 6055 E. Washington Blvd., Commerce, CA 94110 U.S.A. GEM-500 is a product trademark.

Setting Up the Equipment

As described and shown in the Equipment Section, begin assembly of the GEM-500:

1. Connect the methane/carbon dioxide (CH_4 /CO_2) calibration gas cylinder to the pressure regulator.
2. Connect a 24" piece of 1/4" Tygon tubing to the flowmeter outlet. Do not attach this to the GEM-500 until instructed.
3. Connect a second 24" of 1/4" Tygon tubing to the exhaust nozzle of the GEM-500. Direct the exhaust away from you and out of the immediate area.

5. If the regulator has not been preset, set the pressure adjustment on the regulator off its lowest setting. Turn the calibration gas cylinder valve 1/4 turn. Adjust the regulator discharge pressure to 2 psig and the flow meter to 300 cc per minute. Block the discharge hose that will attach to the GEM-500. The regulator discharge pressure should not climb to over 3 psig. Turn off the cylinder valve.

Note: This procedure will be duplicated for the second span gas when Oxygen is calibrated. The Oxygen/Carbon Dioxide calibration gas cylinder will be substituted for the Methane/Carbon Dioxide calibration gas.

General Utilities KEY 5-Gas Calibration

The GEM-500 is factory calibrated. For greater accuracy, a Field Calibration can be performed. To improve accuracy, all standard landfill gas instruments are field calibrated and zeroed prior to every use . This function is done from the General Utilities Menu of the GEM-500 which is explained in Section 3. Because of the importance of Gas Calibration, this function has been made a separate section. To get to the General Utilities Screen on the GEM-500, see Section 3, Using the Menu Screens.

1. Press KEY 1-General Utilities at the Main Menu Screen (See Figure 2.2.).

Figure 2.2

```
1-General Utilities
2-Read Gas Levels
3-View/Print Data
4-Download Data
```

2. The General Utilities Screen appears as shown in Figure 2.3.

Figure 2.3

```
1-Check Time/Date
2-Zero Pressure
3-Memory
9-More          0-Exit
```

© 1993 Landfill Control Technologies, Corporate Headquarters 6055 E. Washington Blvd., Commerce, CA 94110 U.S.A. GEM-500 is a product trademark.

3. The gas calibration function is not on the first General Utilities Screen. To reach this screen, press KEY 9-More and KEY 5-Gas Calibration (Figure 2.4). You could also select KEY 5 while at the General Utilities Screen to proceed directly to the gas calibration screen.

Figure 2.4

```
4-USA/Metric Units
5-Gas Calibration
6-Gas Alarms
9-More          0-Exit
```

4. After selecting KEY 5-GAS CALIBRATION on the General Utilities Sub-Menu Screen, the first Gas Calibration Screen appears as shown in Figure 2.5.

Figure 2.5

```
1-CH4 Calibration
2-CO2 Calibration
3-O2 Calibration
4-Factory Settings
```

5. There are four possible choices. The first choice field calibrates methane. The second choice calibrates carbon dioxide. The third choice calibrates oxygen. The fourth choice returns the GEM-500 from a field calibration established by the user to the original factory settings.
6. Each of these calibration options will now be reviewed in order.

Methane (CH4) Calibration - Zero CH4

1. Pressing KEY 1-CH4 Calibration on the Gas Calibration Screen brings up the Methane Calibration Screen (Figure 2.6).

Figure 2.6

```
1-Zero CH4
2-Calibrate CH4 Span
0-Previous Menu
```

2. Pressing KEY 1-Zero CH4 brings up the Zero Methane Screen (Figure 2.7). A methane percentage will not display until the IR Bench warms up. A plus or negative sign may appear on the far left of the display. This symbol can be ignored.

© 1993 Landfill Control Technologies, Corporate Headquarters 6055 E. Washington Blvd., Commerce, CA 94110 U.S.A. GEM-500 is a product trademark.

Figure 2.7

+00.2% CH4 Gas
1-Zero Level
5-Pump
0-Exit

Note: Do not perform this procedure in the presence of methane.

3. Press KEY 5-Pump. This turns on the sample pump in the GEM-500. There should be no calibration gas hoses attached to the GEM-500 during this procedure. The GEM-500 will be drawing in a sample of normal air—which must be free of methane. Allow the pump to run for FIVE MINUTES to stabilize the instrument to operating temperature and purge the sensors with air. (If the GEM-500 has already reached operating temperature by having been used and is at operating temperature, the pump can be operated for two minutes but when in doubt, let it run for the full five minutes.)

4. Press KEY 1 - Zero level and one of the following screens (Figure 2.8 or Figure 2.9) will be displayed for three seconds before returning to the Zero Methane Screen shown in Figure 2.7.

Figure 2.8

CH_4 Not Zeroed

Figure 2.9

CH_4 Zeroed

5. If the CH4 Not Zeroed Screen (Figure 2.8) was displayed, return to the Gas Calibration Screen by pressing KEY 0-Exit. Recheck that no methane was present and re-zero the methane. If problem continues, proceed to instructions contained in this section for Factory Settings.
6. If the CH4 Zeroed OK Screen (Figure 2.9) appeared, press KEY 0-Exit to return to the Methane Calibration Screen (Figure 2.10). Press KEY 2-Calibrate CH4 Span and proceed to the next section.

© 1993 Landfill Control Technologies, Corporate Headquarters 6055 E. Washington Blvd., Commerce, CA 94110 U.S.A. GEM-500 is a product trademark.

Figure 2.10

```
1-Zero CH4
2-Calibrate CH4 Span
0-Previous Menu
```

WARNING: The GEM-500 is not certified as intrinsically safe. The following procedure MUST NOT be done in a confined area (such as well vaults, underground and indoors) or where there is any chance of sparking or ignition. No smoking, exposed lighting, or other sources of ignition should be in the area . On the GEM-500, ensure that exhaust gas is safe, not blocked and properly vented away from you. Ensure that no leaks are present. Unless all above conditions are maintained, an explosion could occur resulting in serious injury or death.

CH4 Calibration - CH4 Span

1. Read warnings above before proceeding with the next steps.
2. After selecting KEY 2-Calibrate CH4 Span on the Methane Calibration Screen, the following CH4 Span Screen appears (Figure 2.11).

Figure 2.11

```
                    1-Enter
                     gas con
+00.0% CH4 Gas      5-Pump
                    0-Exit
```

3. Connect the 1/4" Tygon tubing from the calibration gas regulator/flow meter to the GEM-500 gas sample/impact port (Figure 1.1). Attach, if not already attached, the Tygon tubing to the exhaust port of the GEM-500. Direct the exhaust away from you and out of the immediate area.
4. Press KEY 5-Pump if the pump is not already running, on the CH4 Span Screen shown above. This turns the GEM-500's pump on.
5. Turn on the calibration gas mixture of methane and carbon dioxide.
6. Check the calibration gas flow (300 cc) and pressure (2 psig) to make sure they are correct. (See Setting Up the Equipment)
7. Allow the calibration gas to flow into the GEM-500 for two minutes.
8. After two minutes, read the methane Gas Concentration on the screen. It should be stable and not changing more than a few tenths of one percent.
9. Press KEY 1-Enter Gas Con and input the methane concentration of the calibration gas from the keyboard of the GEM-500 (Figure 2.12). Enter the percentage as three digits XX.X%. 60% methane would be input as 600. The GEM-500 will automatically place a decimal point in the proper position. After the percentage is entered, press KEY 0-Exit.

© 1993 Landfill Control Technologies, Corporate Headquarters 6055 E. Washington Blvd., Commerce, CA 94110 U.S.A. GEM-500 is a product trademark.

Figure 2.12

```
Enter Concentration
of Calibration Gas
CH4 ?-.-%
                0-Exit
```

10. The next screen is the Caution Re-Calibrate Screen (Figure 2.13).

Figure 2.13

```
Caution  Re-calibrate
Are you sure?

1-Yes            2-No
```

11. Press KEY 1-Yes and one of two messages will appear (Figure 2.14 or Figure 2.15). If the Calibration OK Screen appears proceed to step 13.

Figure 2.14

```
Calibration gas NOT
accepted.  Refer to
operating manual.
Retry?  1-Yes  2-No
```

Figure 2.15

```
Calibration OK
```

© 1993 Landfill Control Technologies, Corporate Headquarters 6055 E. Washington Blvd., Commerce, CA 94110 U.S.A. GEM-500 is a product trademark.

12. If the Calibration gas NOT Accepted Screen appears, several things could have happened. Press KEY 1-Yes and enter the percentage of methane in the calibration gas. It is possible the wrong percentage was input. If on a second attempt this has not worked, press KEY 0-No and return to the CH4 Calibration Screen. Start the procedure over again—Zero methane and then Calibrate methane. If there are still problems—proceed to the Factory Settings later in this section.
13. Press KEY 0-Exit and return to the CH4 Calibration Screen shown on the preceding page. If only CH4 is to be calibrated, the pump must be turn off. Press KEY 0-Exit again and step back to the Gas Calibration Screen. If CO2 is to be calibrated, go to the following CO2 calibration instructions. If no further calibration is required, perform step 14. The pump will remain running throughout the calibration procedure. You must return to the KEY 5-Pump screen to stop the pump.
14. Turn off the calibration gas cylinder. Remove the calibration gas hose attached to the gas sample/static pressure port on the GEM-500. Leave the exhaust port hose connected and turn on the pump and allow it to purge the GEM-500 with air for 60 seconds. Press KEY 5-Pump again. The pump will turn off and automatically return to the Calibrate Methane Screen.
15. Press KEY 0-Exit and return to the Gas Calibration Screen. You have successfully completed a methane Field Calibration.

Carbon Dioxide (CO2) Calibration

1. Because the carbon dioxide used in this calibration contains methane, the following warning must be adhered to before proceeding with the steps below.

WARNING: The GEM-500 is not certified as intrinsically safe. The following procedure MUST NOT be done in a confined area (such as well vaults, underground and indoors) or where there is any chance of sparking or ignition. No smoking, exposed lighting, or other sources of ignition should be in the area . On the GEM-500, ensure that exhaust gas is safe, not blocked and properly vented away from you. Ensure that no leaks are present. Unless all above conditions are maintained, an explosion could occur resulting in serious injury or death.

2. Press Key 2 - CO2 Calibration on the Gas Calibration Screen (Figure 2.16).

Figure 2.16

1-CH_4 Calibration
2-CO_2 Calibration
3-O_2 Calibration
4-Factory Settings

3. There is no Zero CO2 function as there is in the methane or oxygen calibration procedures. The following CO2 Span Screen will appear (Figure 2.17).

Figure 2.17

1-Enter gas con
+00.0% CO2 Gas 5-Pump
0-Exit

© 1993 Landfill Control Technologies, Corporate Headquarters 6055 E. Washington Blvd., Commerce, CA 94110 U.S.A. GEM-500 is a product trademark.

4. Press KEY 1-Enter Gas Con and the Enter Concentration Screen shown below appears. Input the carbon dioxide concentration of the calibration gas from the keyboard of the GEM-500 (Figure 2.18). Enter the percentage as three digits XX.X%. 40% carbon dioxide would be input as 400. The GEM-500 will automatically place a decimal point in the proper position. After the percentage is entered, press KEY 0 - Exit.

Figure 2.18

```
Enter Concentration
of Calibration Gas
CO2 ?-.-%
                0-Exit
```

5. The next screen, Figure 2.19, is the Caution Re-Calibrate Screen.

Figure 2.19

```
Caution Re-calibrate
Are you sure?

1-Yes           2-No
```

6. Press KEY 1-Yes and one of two messages will appear (Figure 2.20 or Figure 2.21). If the Calibration OK Screen appears go to step 9 below.

Figure 2.20

```
Calibration gas NOT
accepted. Refer to
operating manual.
Retry? 1-Yes 2-No
```

© 1993 Landfill Control Technologies, Corporate Headquarters 6055 E. Washington Blvd., Commerce, CA 94110 U.S.A. GEM-500 is a product trademark.

Figure 2.21

Calibration OK

7. If the Calibration gas NOT Accepted Screen appears, several things could have happened. Press KEY 1-Yes and enter the percentage of carbon dioxide in the calibration gas. It is very possible the wrong percentage was input. If on a second attempt this has not worked, press KEY 0-No and return to the Gas Calibration Screen and proceed to the Factory Settings section for additional instructions.
8. If O2 is to be zeroed, go to the following O2 Calibration step.
9. Press KEY 0-Exit and return to the CO2 Calibration Screen shown on the prior page.
10. Turn off the calibration gas. Remove the calibration gas hose attached to the gas sample/static pressure port on the GEM-500. Leave the exhaust port hose connected. Allow the GEM-500 to purge with air for 60 seconds. Press KEY 5-Pump and the pump will automatically turn off, then push KEY 0-Exit to return to the Gas Calibration Screen.
11. You have successfully completed a carbon dioxide Field Calibration. Immediately proceed to the next function, KEY 3-O2 Calibration.

Oxygen (O2) Calibration - Zero O2

1. There are two calibration gas mixtures used for the calibration of oxygen. The methane/carbon dioxide calibration gas previously used to calibrate the methane and carbon dioxide is used to Zero oxygen because there is no oxygen in the mixture. A second calibration gas with a mixture of oxygen and carbon dioxide will be used to set the oxygen level in the next section. Because the calibration gas used in this calibration contains methane, the warning below must be followed before proceeding with the following procedure.

   WARNING: The GEM-500 is not certified as intrinsically safe. The following procedure MUST NOT be done in a confined area (such as well vaults, underground and indoors) or where there is any chance of sparking or ignition. No smoking, exposed lighting, or other sources of ignition should be in the area . On the GEM-500, ensure that exhaust gas is safe, not blocked and properly vented away from you. Ensure that no leaks are present. Unless all above conditions are maintained, an explosion could occur resulting in serious injury or death.

2. Press Key 3-O2 Calibration on the Gas Calibration Screen (Figure 2.22).

Figure 2.22

1-CH_4 Calibration
2-CO_2 Calibration
3-O_2 Calibration
4-Factory Settings

© 1993 Landfill Control Technologies, Corporate Headquarters 6055 E. Washington Blvd., Commerce, CA 94110 U.S.A. GEM-500 is a product trademark.

3. The Oxygen Calibration Screen will appear (Figure 2.23).

Figure 2.23

```
1-Zero O2
2-Calibrate O2 Span
0-Previous Menu
```

4. Pressing KEY 1-Zero O2 will bring up the Zero Oxygen Screen (Figure 2.24).

Figure 2.24

```
                    1-Zero
                     Level
+00.2% O2 Gas       5-Pump
                    0-Exit
```

5. Read the oxygen Gas Concentration on the screen. It should be very near 00.0 % and not changing more than a few tenths of one percent.

Note: Even if the screen displays 00.0% oxygen, proceed with step 11 below, the Oxygen must be zeroed anyway.

6. Press KEY 1-Zero level and the one of following screens (Figure 2.25 or Figure 2.26) are displayed for three seconds before returning to the Zero Oxygen Screen shown above. If the O2 Zeroed Screen was displayed proceed to step 13 below.

Figure 2.25

```
Level NOT Zeroed
Please refer to
Operating Manual
```

© 1993 Landfill Control Technologies, Corporate Headquarters 6055 E. Washington Blvd., Commerce, CA 94110 U.S.A. GEM-500 is a product trademark.

Figure 2.26

O_2 Zeroed

7. If the Oxygen NOT Zeroed Screen was displayed, return to the Oxygen Calibration Screen. Recheck that the calibration gas contains no oxygen. The gas used should have been a mixture of methane and carbon dioxide only. Connect the correct gas and re-zero the oxygen. If the problem continues, proceed to instructions contained in this section for Factory Settings.
8. If the Oxygen Zeroed OK Screen appeared, turn off the calibration gas.
9. Remove the hose to the GEM-500 from the flow regulator. Let the pump run for at least 60 seconds to purge the instrument with air. Press KEY 5-Pump to turn off the pump.
10. Press KEY 0-Exit to return to the Oxygen Calibration Screen Shown below and proceed to the next section.

O2 Calibration - O2 Span

1. From the Gas Calibration Screen, press KEY 2-Calibrate O2 Span and the Oxygen Calibration Screen (Figure 2.27) will appear.

Figure 2.27

1-Zero O_2
2-Calibrate O_2 Span
0-Previous Menu

2. Press KEY 2-Calibrate O2 Span on the Oxygen Calibration Screen will appear (Figure 2.28).

Figure 2.28

+00.0% O2 Gas
1-Zero Level
5-Pump
0-Exit

Note: The calibration gas used in this procedure is a mixture of oxygen and carbon dioxide. The oxygen concentration by volume can be 2-5% with the remainder CO2.

3. Change the Calibration Gas mixture to Oxygen/Carbon Dioxide. Install the regulator/flow meter on the new Calibration Gas mixture as directed previously in the section Setting Up the Equipment. Check and adjust the gas flow to 300 cc and pressure to 2 psig. Turn off the gas.

© 1993 Landfill Control Technologies, Corporate Headquarters 6055 E. Washington Blvd., Commerce, CA 94110 U.S.A. GEM-500 is a product trademark.

Figure 2.34

```
1-CH4 Calibration
2-CO2 Calibration
3-O2 Calibration
4-Factory Settings
```

2. The Caution Screen, Figure 2.35, shown below will be displayed. If KEY 0 - No is pressed, screen represented in Figure 2.36 will appear for two seconds and the Gas Calibration Screen will return.

Figure 2.35

```
CAUTION Return to
Factory Setting of
Calibration & Zero
1-Yes        2-No
```

Figure 2.36

```
Factory Setting
NOT Set
```

3. Press KEY 1-Yes and the screen shown in Figure 2.37 is displayed for three seconds before returning to the Gas Calibration Screen shown in step 1.

Figure 2.37

```
Factory Setting
Set OK
```

© 1993 Landfill Control Technologies, Corporate Headquarters 6055 E. Washington Blvd., Commerce, CA 94110 U.S.A. GEM-500 is a product trademark.

4. After loading the factory setting, the methane and oxygen calibration **must be rezeroed prior to use.**

After Completing Gas Calibrations

Additional General Utilities functions should be addressed after the GEM-500 is field calibrated. These functions are available from the General Utilities Menu and include:

- Check Time/Date—to make sure the data collected is properly date stamped.
- Check Memory—to see if there is enough space in the GEM-500 for the reading you plan to do. Otherwise the memory will have to be cleared.
- Set Gas Alarms—if you wish to have the GEM-500 alert you to unusual gas conditions.

After completing the gas calibrations, you can begin to read gas levels. Go to Chapter 5-Read Gas Levels, of this manual.

© 1993 Landfill Control Technologies, Corporate Headquarters 6055 E. Washington Blvd., Commerce, CA 94110 U.S.A. GEM-500 is a product trademark.

Chapter 3-Using Menu Screens

Starting Up the GEM

This procedure is the same each time the GEM-500 is turned on by pressing the Red ON/OFF Key. The following steps will allow you to proceed to the Main Menu Screen of the GEM.

Note: If the GEM is turned on and no additional keys are pressed within 15 minutes, the unit will turn off automatically to save power. No stored data will be lost.

1. Turn unit on by pressing the RED KEY-On/Off .
2. The Warning Screen will appear for five seconds. This is a reminder that the GEM-500 is not to be used in confined areas such as vaults, excavations or indoors. An explosion could result causing serious injury or death.

Figure 3.1

WARNING! DO NOT use in confined spaces-UNIT not certified intrinsically safe

3. Service Contract Screen may appear for five seconds if activated by LANDTEC. Otherwise the Not Covered Screen can be displayed. The GEM-500 is a portable scientific field instrument that does require factory maintenance and calibration at recommended six month intervals under normal landfill usage.

Figure 3.2

This Analyzer is not covered by a Service Contract Next Service due:

Figure 3.3

This Analyzer has a Service Contract Next Service due: (date)

© 1993 Landfill Control Technologies, Corporate Headquarters 6055 E. Washington Blvd., Commerce, CA 94110 U.S.A. GEM-500 is a product trademark.

The LANDTEC/Contrast Screen follows and allows the user to adjust the contrast of the characters on the liquid crystal display screen. Press and hold KEY 1-Cursor-Up Arrow to increase contrast. Press and hold the KEY 6-Cursor-Down Arrow to decrease the contrast. Adjust the contrast as necessary. Press the KEY 0 to exit to the next screen.

Figure 3.4

```
LANDTEC
GEM-500
(800) 821-0496
↑↓ -Contrast   0-Exit
```

4. Following is the Main Menu Screen. All the GEM-500's functions are accessed from the Main Menu Screen. All future instructions about GEM-500 functions will start with from this screen.

Figure 3.5

```
1-General Utilities
2-Read Gas Levels
3-View/Print Data
4-Download Data
```

GEM-500 Menu Screens Tree

The overall menu screens structure is displayed below:

Figure 3.6

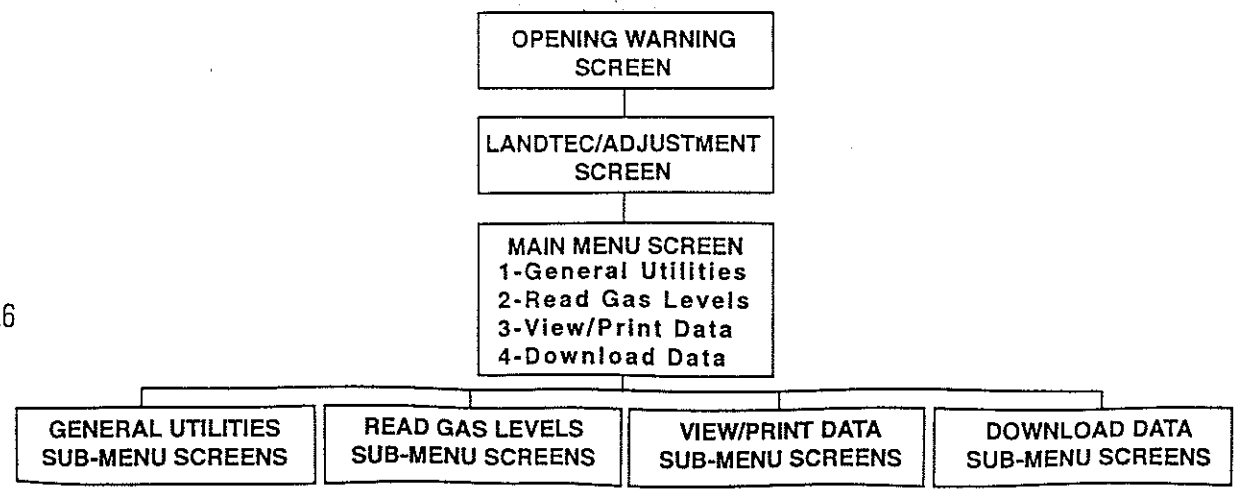

© 1993 Landfill Control Technologies, Corporate Headquarters 6055 E. Washington Blvd., Commerce, CA 94110 U.S.A. GEM-500 is a product trademark.

Review of the Main Menu and Sub-Menu Screens

The Main Menu Screen has four major functions which have the following specific actions:

General Utilities

Refer to Chapter 4 for further information. The General Utilities function has sub-menu screens that allow housekeeping and other maintenance including:

1. CHECK TIME/DATE: Used to check or set time and date.
2. ZERO PRESSURE: Zeros pressure transducers.
3. MEMORY: Check memory available and clears all data and ID information.
4. USA/METRIC UNITS: Select either USA standard or metric measurement units.
5. GAS CALIBRATION: Allows methane, carbon dioxide and oxygen to be field calibrated by the user with calibration gas mixtures for increased accuracy (Discussed in Section 2).
6. GAS ALARM: Sets gas alarm levels.
7. ID MAINTENANCE: Used to view, edit or delete existing ID information and to enter new ID information.

Read Gas Levels

Refer to Chapter 5 for further information. Read Gas Levels function allows gas, pressure, flow and BTU readings to be viewed and recorded. Sub-menu screens include:

1. Read GAS with Existing ID code - has three linked screens.
2. Read GAS without ID code.

View/Print Data

For further information, refer to Chapter 6. View/Print Data function allows previously stored data to be scanned on the GEM display screen, individually displayed or printed via the optional RS-232 cable to a serial printer.

Download Data

The Download Data function allows stored data to be downloaded via the optional RS-232 cable to a personal computer in a format that can be uploaded into other programs including spreadsheets and LANDTEC's data base management program. See Chapter 7 for further information.

Note: The KEY 0-Backspace will act as an exit or escape key at the end of each sub-menu and return you to the main menu screen.

© 1993 Landfill Control Technologies, Corporate Headquarters 6055 E. Washington Blvd., Commerce, CA 94110 U.S.A. GEM-500 is a product trademark.

© 1993 Landfill Control Technologies, Corporate Headquarters 6055 E. Washington Blvd., Commerce, CA 94110 U.S.A. GEM-500 is a product trademark.

Chapter 4-General Utilities Functions

Read Chapter 3 on how to get to the Main Menu Screen. Also see the GEM-500 Menu Screen Tree which is a diagram located in Chapter 3.

Press KEY 1-General Utilities on the Main Menu Screen. There are seven options available that are displayed on three sub-menu screens as shown below. Select the desired function by pressing the appropriate key. The desired option does not need to be displayed in order to select it. For example, if the first screen is displayed, entering KEY 5 will bring up the Gas Calibration Sub-Menu which is located on the second screen. From any of these Sub-Menus, if the KEY 0-Exit is pressed, then the Main Menu Screen will re-appear (Figure 4.1).

1. CHECK TIME/DATE: Used to check or set time and date.
2. ZERO PRESSURE: Zero's pressure transducers.
3. MEMORY: Check memory available and allows clearing of all data and ID information.
4. USA/METRIC UNITS: Select either USA standard (Imperial) or metric (SI) measurement units.
5. GAS CALIBRATION: Allows methane, carbon dioxide and oxygen to be field calibrated by the user with a special gas mixture for increased accuracy.
6. GAS ALARM: Sets gas alarm levels.
7. ID MAINTENANCE: Used to view, edit or delete existing ID information and to enter new ID information.

Figure 4.1

```
1-General Utilities
2-Read Gas Levels
3-View/Print Data
4-Download Data
```

General Utilities Menu

By pressing KEY 1 on the Main Menu Screen, the General Utilities Menu Screen (Figure 4.2) will appear.

Figure 4.2

```
1-Check Time/Date
2-Zero Pressure
3-Memory
9-More      0-Exit
```

As shown, three General Utilities functions are shown on each General Utilities Menu Screen. By pressing KEY 9, the next screen of utility functions is displayed (Figure 4.3).

© 1993 Landfill Control Technologies, Corporate Headquarters 6055 E. Washington Blvd., Commerce, CA 94110 U.S.A. GEM-500 is a product trademark.

Figure 4.3

```
4-USA/Metric Units
5-Gas Calibration
6-Gas Alarms
9-More        0-Exit
```

Press KEY 9 again for one more screen of General Utilities functions (Figure 4.4). As previously mentioned, any function number can be pressed while any screen is displayed. Pressing KEY 9 displays the list of functions again. Pressing the KEY 0 returns you to the Main Menu Screen.

Figure 4.4

```
7-ID Maintenance

9-Back        0-Exit
```

General Utilities Screen Tree Diagram

Figure 4.5

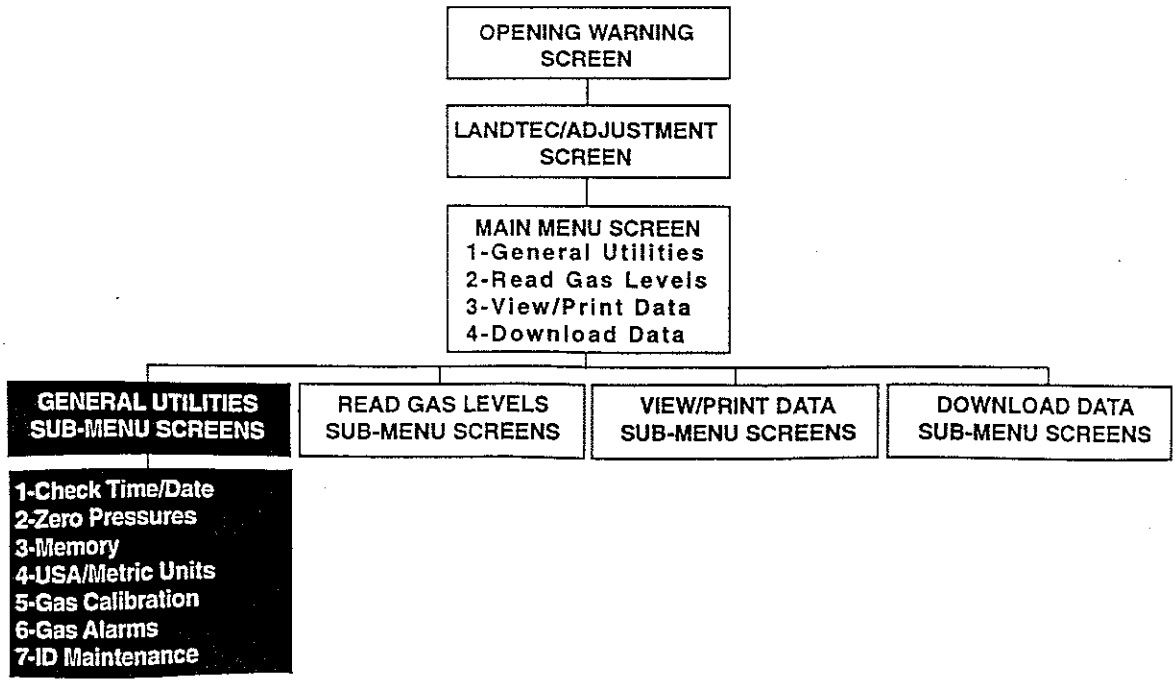

© 1993 Landfill Control Technologies, Corporate Headquarters 6055 E. Washington Blvd., Commerce, CA 94110 U.S.A. GEM-500 is a product trademark.

General Utilities KEY 1-Check Time/Date

There is an internal clock and calendar in the GEM-500 unit which is powered by a secondary battery. This maintains the clock function even when the GEM-500 is off. The battery can only be changed by an authorized factory service representative.

As each reading is stored in the GEM-500, it is time and date stamped. Both the clock and calendar are set by LANDTEC, however, they should be set to the local time zone the first time and checked weekly thereafter.

1. Press KEY 1 on the Main Menu Screen for the General Utilities Sub-Menu Screen. This takes you to the General Utilities Sub-Menu Screen (Figure 4.6). Press Key 1 on the General Utilities Sub-Menu Screen as shown below for the Check Time/Date function.

Figure 4.6

```
1-Check Time/Date
2-Zero Pressure
3-Memory
9-More        0-Exit
```

2. The following Set Time/Date Screen is displayed (Figure 4.7). Press KEY 1 to proceed.

Figure 4.7

```
15:46:07    09/07/93

1-Set Time/Date
                0-Exit
```

3. The time and date are displayed on the top line of the screen. A 24-hour clock is used. If after 12 noon, add 12 to the hour to convert it to a 24-hour format. Example: 3 p.m. is 12+3= 15 00 hours. The time format is Hours: Minutes. Seconds. The date format used in the example is in U.S. calendar format (see note below).
4. If CHECK TIME/DATE is ok, end procedure by pressing KEY 0-Exit and returning to the General Utilities Sub-Menu Screen. Otherwise if CHECK TIME/DATE is wrong, press KEY 1, and set CHECK TIME/DATE in the next step.
5. Set the time and date as shown on Figure 4.8 by entering numbers from the GEM-500 keyboard. Press the KEY 0-Set when done.

© 1993 Landfill Control Technologies, Corporate Headquarters 6055 E. Washington Blvd., Commerce, CA 94110 U.S.A. GEM-500 is a product trademark.

Figure 4.8

```
?h:mm:ss  mm/dd/yy

Enter New Time/Date
                0-Set
```

NOTE: If necessary to correct an entry error, use 0 KEY (exit) as Backspace Key by holding it down for 1 second. In normal use, 0 KEY is quickly pressed and released. In above screen for time: hh = hours, mm = minutes, ss = seconds and date: mm = months, dd = days, yy = years. CHECK TIME/DATE is in U.S. calendar format.

6. One of two screens will be displayed. Both are shown below. If the date is valid, Figure 4.9 will display for three seconds. If the time or date is invalid the second screen will appear as shown on Figure 4.10. The Time/Date is invalid when impossible numbers are entered into a field. For example mm=15 is an invalid month. Return to step 5 above and re-enter the correct time and date as instructed.

Figure 4.9

```
Time/Date Set OK
```

Figure 4.10

```
Invalid Time/Date
Please enter again
```

General Utilities KEY 2-Zero Pressure

The GEM-500 measures atmospheric pressure as part of the LFG flow calculation. To properly measure pressure and the vacuum used in landfill gas extraction systems, the pressure transducers must be reset to zero before using the GEM-500. This is done to compensate for atmospheric pressure changes due to local weather conditions and changes in elevation.

This procedure should be done prior to doing any READ GAS LEVELS as shown in Chapter 5 unless the static and differential pressures read 00.0. The ZERO PRESSURE function is also contained on the READ GAS LEVELS Sub-Menu Screen. Whenever the pressure transducer readings are not zero and you know they should be, use this procedure. As a general rule this procedures should be done each time the GEM-500 is used.

© 1993 Landfill Control Technologies, Corporate Headquarters 6055 E. Washington Blvd., Commerce, CA 94110 U.S.A. GEM-500 is a product trademark.

1. Press KEY 1-General Utilities at the Main Menu Screen for the General Utilities Sub-Menu Screen.
2. Press the KEY 2 for Zero Pressure on the General Utilities Sub-Menu Screen as shown in Figure 4.11.

Figure 4.11

```
1-Check Time/Date
2-Zero Pressure
3-Memory
9-More        0-Exit
```

3. Figure 4.12 displays the current readings of the Static and Differential pressure transducers. If both pressures do not read 00.0 DISCONNECT ANY HOSES IF ATTACHED TO A WELLHEAD and press KEY 1-Zero Pressures.

Figure 4.12

```
     Static  +00.2"H20
Differential -0.30"H20
1-Zero Pressures
                0-Exit
```

Note: Units displayed will be inches of water column or MB depending on measurement unit selected (USA or metric).

4. After the pressures have been zeroed, Figure 4.13 will appear for three seconds. Then the Zero Pressure Screen in step 3 appears.

Figure 4.13

```
Zeroed OK
```

5. Press the KEY 0 - Exit to end procedure and return to General Utilities Sub-Menu Screen.

© 1993 Landfill Control Technologies, Corporate Headquarters 6055 E. Washington Blvd., Commerce, CA 94110 U.S.A. GEM-500 is a product trademark.

General Utilities KEY 3-Memory

Caution: This function can erase all stored data.

Each GEM-500 ID point and all readings taken at that ID point are stored in the GEM-500's memory. Eventually the memory becomes full. After each day's readings are completed, the memory function should be checked. Normally the readings for the day are Downloaded to a PC or are printed out (see functions 3 & 4 on the Main Menu in Section 3). If the memory becomes full, a MEMORY FULL message is displayed. When this happens, the memory must be cleared.

The GEM-500 can store many ID points. It is therefore possible to use it on several landfills. As stated in the warning above, once cleared, the data cannot be restored.

1. Press KEY 1 at the Main Menu Screen for the General Utilities Sub-Menu Screen.
2. Then press the KEY 3 for Memory on the General Utilities Sub-Menu Screen (Figure 4.14).

Figure 4.14

```
1-Check Time/Date
2-Zero Pressure
3-Memory
9-More        0-Exit
```

3. The following screen—Number of Free Readings Screen, allows for two choices: Press KEY 1 - Clear Readings to erase all gas/etc. data readings or Press KEY 2 - Clear ID Info to erase All ID Code Numbers and Flow Data that have accumulated in the GEM-500 from ID MAINTENANCE and READ GAS functions.

   Press the KEY 0 - Exit to escape from the procedure and return to the General Utilities Sub-Menu Screen without clearing any information.

Figure 4.15

```
 0479 Free Readings
1-Clear Readings
2-Clear ID Info
              0-Exit
```

4. After making your choice of 1 or 2 on the screen above, the following screen appears. As a final safety check, you must input the numeric value 0102 from the GEM-500 keyboard to clear the memory. IF YOU DECIDE NOT TO CLEAR THE MEMORY AT THIS POINTùTURN THE GEM-500 OFF BY PRESSING THE RED ON/OFF KEY. Do Not Input 0102 unless you want to proceed.

   Caution: This step erases stored data. You may want to print the memory out or download the data first so it is not lost.

© 1993 Landfill Control Technologies, Corporate Headquarters 6055 E. Washington Blvd., Commerce, CA 94110 U.S.A. GEM-500 is a product trademark.

Figure 4.16

```
CAUTION!
DATA WILL BE LOST
Enter 0102 to clear
?
```

5. Enter 0102 from the keyboard and press the KEY 0 - Exit. The Clearing Memory Screen appears for 3 seconds if the memory was erased.

Figure 4.17

```
Clearing Memory
```

After displaying the above, the Number of Free Readings Screen shown in Step 4 above is re-displayed. Press the 0 Key to Exit to the General Utilities Menu Screen.

General Utilities KEY 4-USA/Metric Units

The GEM-500 can display and story data in 2 units of measureùMetric (SI) or Imperial (USA). This function allows for the setting of the unit of measure. Normally once set, it does not need to be changed.

1. Press KEY 1-General Utilities at the Main Menu Screen for the General Utilities Sub-Menu Screen.
2. Since function 4-USA/Metric Units is not on the first General Utilities Screen, press the KEY 9-More for the next screen.
3. Press the KEY 4-USA/Metric Units on the General Utilities Sub-Menu Screen as shown in Figure 4.18.

Figure 4.18

```
4-USA/Metric Units
5-Gas Calibration
6-Gas Alarms
9-More        0-Exit
```

4. The Measurement Units Screen appears as shown in Figure 4.19. Press the KEY 1 to change from one unit to the other. (It acts a toggle switching from one to the other.) If the GEM-500 is currently displaying USA measurement units (Imperial — Btu's, Standard Cubic Feet, Fahrenheit temperatures, etc.) it switches to Metric. When done, press the KEY 0-Exit Key to return to the General Utilities Sub-Menu Screen.

© 1993 Landfill Control Technologies, Corporate Headquarters 6055 E. Washington Blvd., Commerce, CA 94110 U.S.A. GEM-500 is a product trademark.

Figure 4.19

```
Measurement Units
Set to Metric (USA Std)
1-Change to Metric (USA)
                0-Exit
```

General Utilities KEY 5-Gas Calibration

Please refer to Chapter 2-Field Calibration for all information and instructions relating to the Gas Calibration function.

General Utilities KEY 6-Gas Alarm

The GEM-500 has two alarm options that can warn the operator if a gas sample contains concentrations of Methane below established levels or Oxygen above preset levels. If the alarms are activated, there is a beeping and the affected gas blinks when displayed on the Read Gas Levels Screens.

1. Press KEY 1 at the Main Menu Screen for the General Utilities Sub-Menu Screen.
2. Then press the KEY 9-More. Press the KEY 6-Gas Alarms on the General Utilities Sub-Menu Screen as shown in Figure 4.20.

Figure 4.20

```
4-USA/Metric Units
5-Gas Calibration
6-Gas Alarms
9-More      0-Exit
```

3. The following screen is displayed (Figure 4.21). Chose one or two to change the methane gas or oxygen level . If no change in gas levels is required press the KEY 0-Exit to return to the General Utilities Sub-Menu Screen.

Figure 4.21

```
Methane Below 00.0%
Oxygen Above  22.2%
1-Change Methane
2-Change Oxygen
```

© 1993 Landfill Control Technologies, Corporate Headquarters 6055 E. Washington Blvd., Commerce, CA 94110 U.S.A. GEM-500 is a product trademark.

4. If KEY 1-Change Methane is pressed the following screen will appear (Figure 4.22). Using the numbered keys on the GEM keyboard input the new 3 digit level for methane (CH4). All three digits must be entered (XX.X%), the decimal point is automatically inserted. Press KEY 0-Exit.

```
CH4 Level is   00.0%
Level Required ?.0%

Enter level
```

Figure 4.22

Note: Screens shown in steps 4 and 5 display current alarm levels of methane (CH4) and oxygen (O2). During the Read Gas Levels procedure, if the GEM receives CH4 gas at or below these levels, or O2 gas at or above these levels, then an audible warning sound will occur to alert operator.

5. If KEY 2-Change Oxygen is pressed Figure 4.23 will appear. Using the numbered keys on the GEM keyboard input the new three digit level for oxygen (O2). All three digits must be entered and the decimal point is automatically inserted. Press KEY 0-Exit.

```
O2 Level is    00.0%
Level Required ?.0%

Enter level
```

Figure 4.23

Note: In steps 4 or 5, if necessary to correct an entry errors, use KEY 0-Exit to backspace by holding the key down for one second. In normal use, KEY 0 is quickly pressed and released to exit.

6. Press the KEY 0-Exit which returns you to the screen shown in Step 3 above. Press the KEY 0-Exit which will return you to the General Utilities Sub Menu Screen.

General Utilities KEY 7-ID Maintenance

The ID maintenance function allows each monitoring point on a site to be assigned a unique ID code. This code must be eight characters long. The characters can be any combination of letters and numbers. Typically, the landfill name or an abbreviation is used for the first four characters. After an ID code is entered (Step 4), you must also select the type of flow device (Accu-Flo, pitot tube, orifice plate) used at that ID location (Step 5). Depending on the flow device selected, you must also enter either: no data, pipe ID (inner diameter), or both orifice and pipe ID size.

1. Press 1 KEY at the Main Menu Screen for the General Utilities Sub-Menu Screen.
2. Then press the 9 KEY for More and because function 7 is not displayed press the 9 KEY one more time. Press the 7 key - ID Maintenance on the General Utilities Sub-Menu Screen as shown in Figure 4.24.

© 1993 Landfill Control Technologies, Corporate Headquarters 6055 E. Washington Blvd., Commerce, CA 94110 U.S.A. GEM-500 is a product trademark.

Figure 4.24

```
Please Enter ID
Numbers/Letters
ID xxxx?
                0-Enter
```

3. The screen represented by Figure 4.25 is displayed. Press KEY 2-Enter New ID and go to Step 4. Press the KEY 1-View/Edit/Select to see, change or delete ID information. Go directly to Step 10 . Press the KEY 0-Exit.

Figure 4.25

```
ID Maintenance
1-View/Edit/Delete
2-Enter New ID
                0-Exit
```

4. After pressing KEY 2- Enter New ID the following screen (Figure 4.26) appears to allow the inserting of letters or numbers in the ID code.

Figure 4.26

```
Please Enter ID
Numbers/Letters
ID xxxx?_ _ _
                0-Enter
```

5. Enter the new ID code as shown on the above screen using number or letters:
   For numbers press Number KEYS.
   For letters, press arrow KEY 1 or KEY 6.
   Enter each letter by pressing KEY 0.
   Use the BLUE KEY to switch between letters and numbers.
   (See Keyboard Information in the Getting Started Section at the beginning of this Manual.) After the final digit is inserted the KEY 0-Enter is displayed. Press if ready to enter, otherwise press and hold the KEY 0 and use it as a Backspace Key.
6. WHEN AN EXISTING ID CODE IS ENTERED, THE SCREEN SHOWN IN FIGURE 4.27 WILL APPEAR. Press the KEY 1-Yes to proceed. If KEY 2 -No is selected, the GEM returns to screen shown in step 3 above.

© 1993 Landfill Control Technologies, Corporate Headquarters 6055 E. Washington Blvd., Commerce, CA 94110 U.S.A. GEM-500 is a product trademark.

```
IDxxxx xxxx Already
Exists, Overwrite?

1-Yes          2-No
```

Figure 4.27

7. The next screen displayed after step 5 is shown as Figure 4.28. It allows for the selection of a flow device. This choice is necessary for the GEM to calculate flow when readings are taken. The following choices are possible:
   Accuflo - 1V (1 1/2" Accuflo Model 150 Vertical Wellhead)
   Accuflo - 1 H (1 1/2" Accuflo Model 150 Horizontal Wellhead)
   Accuflo - 2V (2" Accu-Flo Model 200 Vertical Wellhead)
   Accuflo - 2H (2" Accu-Flo Model 200 Horizontal Wellhead)
   Accuflo - 3V (3" Accu-Flo Model 300 Vertical Wellhead)
   Accuflo - 3H (3" Accu-Flo Model 300 Horizontal Wellhead)
   Orifice Plate (Orifice diameter and pipe inner diameter are also required
   Pitot Tube - Pipe ID is required
   User Input (Orifice diameter and Pipe ID also required)

   Note: User input allows user to input flow in SCFM if known. A user without a flow device could use this screen to record velocity or other relevant data. (If using a Kurz meter, for example.)

```
Select Flow Device
Accuflo-1V
↑-Scroll Up
↓-Scroll Down    0-Cont
```

Figure 4.28

8. Press the KEY-0 to Continue. If an Orifice Plate, Pitot Tube or User Input flow device is selected, additional information will be required. If the pipe or orifice diameter screen appears, input the required size as necessary. Use the number keys on the GEM keyboard. The decimal point is automatically placed. Insert XX.XX inches or centimeters depending on the units selected. Press the KEY 0 to continue.
9. The ID Stored OK Screen is displayed for three seconds (Figure 4.29). The GEM then returns to the screen displayed in step 3 for additional ID input.

© 1993 Landfill Control Technologies, Corporate Headquarters 6055 E. Washington Blvd., Commerce, CA 94110 U.S.A. GEM-500 is a product trademark.

Figure 4.29

```
ID Stored OK
```

10. To view ID information, press KEY 1 to scroll through stored ID codes and data.

Figure 4.30

```
ID ABCD1234        2-Edit
Accuflo-2V         3-Del
                   ↓↑-Scan
                   0-Exit
```

11. Press the arrow KEYS 1 and 6 to select desired ID codes (if not displayed).
    Press KEY 2-Edit to change flow data. Go to Step 7.
    Press KEY 3-Del to erase the ID code and its flow data. Go to step 11.
    Press KEY 0-Exit to return to ID Maintenance menu.

Figure 4.31

```
Delete ID?
ABCD0001
1-Yes        2-No
```

Note: In Step 10 the left side of screen displays an eight character ID code, with its related flow data below. Use arrow KEY 1 or KEY 6 to see all stored ID codes (and data) when more than one code is in memory. When a unique ID code is displayed, pressing KEY 2 (edit) allows that code's flow device and pipe/orifice data (if any) to be altered. Once KEY 2 is pressed the original "flow data" information is erased and new data must be entered. KEY 3 (del), is used as the initial command for the complete erasing of ID code and its flow data .

12. If the ID Data was erased by selecting the KEY 3-Del in the screen above the following screen will ask for confirmation. Press the KEY 1-Yes and the KEY 2-No.

© 1993 Landfill Control Technologies, Corporate Headquarters 6055 E. Washington Blvd., Commerce, CA 94110 U.S.A. GEM-500 is a product trademark.

13. The screen shown below will appear for three seconds before returning to step 10 if the KEY 1-Yes was pressed.

Figure 4.32

ID Deleted

© 1993 Landfill Control Technologies, Corporate Headquarters 6055 E. Washington Blvd., Commerce, CA 94110 U.S.A. GEM-500 is a product trademark.

© 1993 Landfill Control Technologies, Corporate Headquarters 6055 E. Washington Blvd., Commerce, CA 94110 U.S.A. GEM-500 is a product trademark.

Chapter 5-Read Gas Levels

This section instructs the operator in how to use the GEM-500 to collect data from LFG extraction system wells and other monitoring points. Several things should be done prior to beginning to collect data readings with the GEM.

The operator should be familiar with the following:

- Check the TIME/DATE (See General Utilities - 1)
- Charge the unit's nickel cadmium batteries (See Chapter 8 - Maintenance)
- Perform a ZERO PRESSURE (See General Utilities - 2)
- Perform a Field Calibration on the unit (See Section 2 - Field Calibration)

If the distance to the site where it will be used is great, put the GEM-500 in its protective hard case and secure it well. If the site is nearby, the soft case will offer enough protection. The GEM-500 is a sensitive measuring instrument. Vibration, shock and great temperature changes can alter the field calibration. It is suggested that the field calibration be performed just before using the instrument at the site. Additional calibration is sometimes necessary in the field during the day.

Warning

Review the warnings given in the beginning of this manual. The GEM-500 is NOT to be used in dangerous, explosive or confined atmospheres. Do not use it inside vaults, manholes, trenches or indoors. Do NOT block the exhaust port. If it is blocked while the pump is operating, the pressure could force the unit to over-pressurize and damage internal components and the case.

GEM-500 Hose and Wellhead Connection

The proper hoses must be connected from the GEM-500 to the wellhead in order to collect data. As mentioned in the Getting Started Chapter, the black striped Tygon hose with the external filter/water trap assembly was attached to the static pressure port on the GEM-500 (Figure 5.1). The almond colored male quick connect goes on the end of this tubing to read the static pressure on the Accu-Flo Wellhead.

The clear Tygon hose is connected to the impact port of the GEM-500. A chrome plated brass male fitting was put on the end of the clear tubing. This chrome fitting is used to measure the impact pressure at the wellhead.

On the following page are examples of the Accu-Flo Wellhead, both vertical and horizontal models. Note the locations of the Static Pressure Port, Impact Pressure Port, Temperature Gauge, and Gas Sample Port.

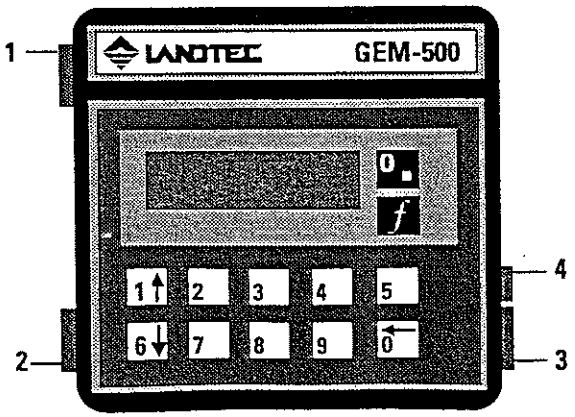

Figure 5.1

1. Static Pressure/Sampling Port—Measures static pressure when connected to wellhead staticpressure port by tubing.
2. Impact Pressure Port—Measures impact pressure when connected to wellhead impact pressure port by tubing.
3. Exhaust Port—This port must be kept clear. If blocked while operating, over pressurization and damage to internal components and case could occur.
4. RS-232 Port—Used for battery recharging, data downloading and temperature readings.

© 1993 Landfill Control Technologies, Corporate Headquarters 6055 E. Washington Blvd., Commerce, CA 94110 U.S.A. GEM-500 is a product trademark.

LANDTEC Horizontal Accu-Flo Wellhead

Figure 5.2

LANDTEC Vertical Accu-Flo Wellhead

Figure 5.3

© 1993 Landfill Control Technologies, Corporate Headquarters 6055 E. Washington Blvd., Commerce, CA 94110 U.S.A. GEM-500 is a product trademark.

Read Gas Levels Screen Tree Diagram

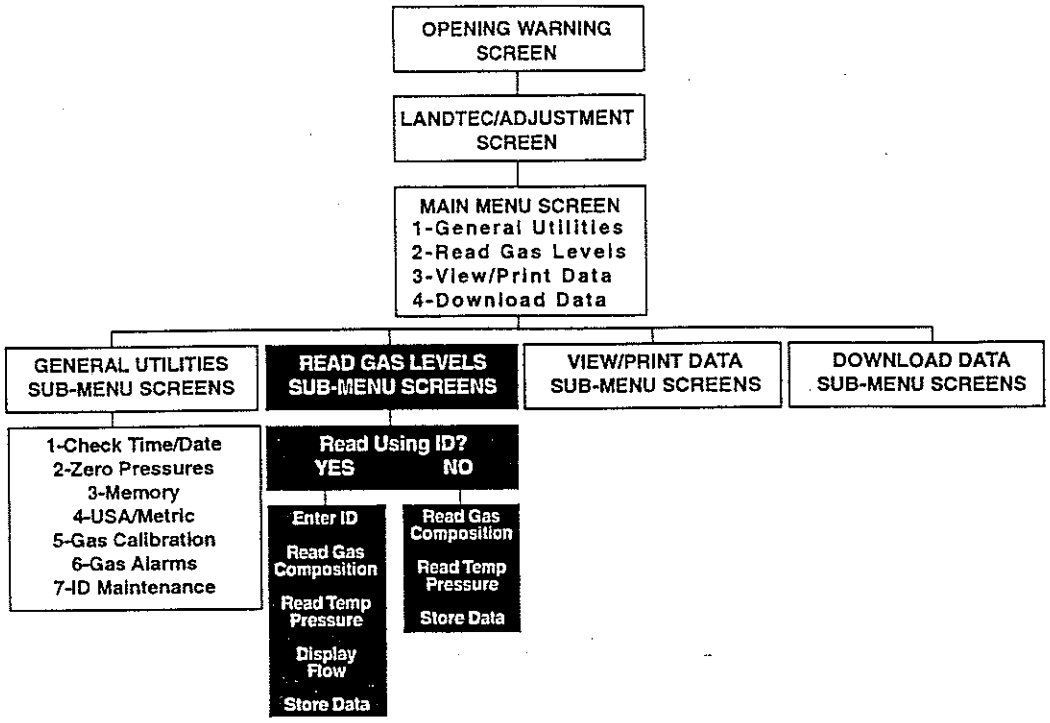

Figure 5.4

As shown in the screen tree diagram (Figure 5.4), there are two paths depending on whether or not an ID has been defined and stored in the GEM-500. Without the flow device, which is stored with the ID, it is not possible to calculate and display flow or store the data. IDs can be added during this procedure at several other points.

Read Gas Levels Menu

1. Press KEY 2 at the Main Menu Screen (Figure 5.5) for the Read Gas Levels Screen.

Figure 5.5

```
1-General Utilities
2-Read Gas Levels
3-View/Print Data
4-Download Data
```

© 1993 Landfill Control Technologies, Corporate Headquarters 6055 E. Washington Blvd., Commerce, CA 94110 U.S.A. GEM-500 is a product trademark.

2. The Read Gas Levels Screen is displayed as shown in Figure 5.6.

Figure 5.6

```
Read Using ID?

1-Yes  2-No   0-Exit
```

3. The normal response to this screen is KEY 1-Yes. If the KEY 2-No is selected, gas flow cannot be calculated and the data cannot be stored because there is no ID with which to associate the data. By pressing KEY 0-Exit, the user is returned to the Main Menu Screen. Press the KEY 1-Yes and the Enter ID Screen (Figure 5.7) is displayed. If KEY 1-scroll is selected, the second screen below will appear (Figure 5.8). Press KEY 1 or KEY 6 to scroll through the ID information and press KEY 2 to select the desired ID. Selecting KEY 2-Manual will present the third screen (Figure 5.9). Note the arrow step and KEY 0-Enter only appear if letters have been selected.

Figure 5.7

```
Manually enter ID or
  scroll through?

1-Scroll     2-Manual
```

Figure 5.8

```
1) ID XXXX XXXX
↓↑ - Scroll
 2 - Manual       0-Exit
```

Figure 5.9

```
Please Enter ID
Numbers/Letters
ID XXXX ?
↓↑  - Step        0-Enter
```

© 1993 Landfill Control Technologies, Corporate Headquarters 6055 E. Washington Blvd., Commerce, CA 94110 U.S.A. GEM-500 is a product trademark.

4. An ID allows each monitoring point on a site to be assigned a unique identification. This code must be eight characters long. The characters can be any combination of letters and numbers. Typically, the landfill name or an abbreviation is used for the first four characters and one letter and three numbers for the second four characters. The well IDs and data displayed is used for example purposes only on the Enter ID Screen.
5. Enter ID code using number and/or letter mode:
   For numbers, press Number KEYS
   For letters, press KEY 1-Cursor-Up and or KEY 6-Cursor-Down.
   Enter each letter by pressing KEY 0 Enter.
   Use Blue Number/Letter Toggle KEY to switch between numbers and letters.
   (See Chapter 1, The Keyboard Section for further information)
6. After the ID is input, one of two screens will appear. The No Reading for ID Screen (Figure 5.10) appears when the ID is not found (or because the correct ID was not entered). To re-enter the ID information, press KEY 1. Press KEY 2 to retry and re-enter to ID number. KEY 0-Abort returns you to the General Utilities Menu. When the ID is found in the GEM-500's memory, the screen in Figure 5.11 is displayed . Assuming the correct ID was found, press the KEY 1-Read to continue. If the ID codes is incorrect, press KEY 2-Retry and re-enter the information as described previously. To make corrections, press KEY 3-Edit and follow the procedures described in the ID maintenance section.

```
No Reading for ID
     XXXX XXXX
1-Enter ID info
2-Retry        0-Abort
```

Figure 5.10

```
ID ABCD1234   1-Read
Accuflo-2V    2-Retry
              3-Edit
              0-Abort
```

Figure 5.11

7. Press the 1 KEY- Read Gas Levels and Figure 5.12 will appear.

```
CH4  00.0%  | 1-LEL 2-Cont
CO2  00.0%  | 5-Pump On/Off
O2   00.0%  | 9-Last Data
BAL  00.0%  |        0-Exit
```

Figure 5.12

© 1993 Landfill Control Technologies, Corporate Headquarters 6055 E. Washington Blvd., Commerce, CA 94110 U.S.A. GEM-500 is a product trademark.

8. Press KEY 5-Pump to turn pump on and draw a gas sample from the wellhead into the GEM-500. Allow readings on left side of screen, to become stable before pressing KEY 2-Continue. A timer is located on the screen to monitor time pump is running. This will automatically turn off the pump. If you want to turn off the pump without proceeding to the next screen, press the KEY 5-Pump again and the pump will be turned off. Press KEY 1-LEL to display the Lower Explosive Limit Screen. Exit from the LEL Screen by pressing KEY 0-Exit.

Figure 5.13

00.0 % CH4 Gas	5-Pump ON/OFF
00.0 % CH4 LEL	0-Exit

The LEL screen is shown in Figure 5.13. The lower explosive limit of methane by volume in air is 5%. This means a five percent concentration is explosive. For safety reasons, some rules require that methane levels do not exceed 1% methane or 20% LEL or 1 1/4% methane which is 25% LEL. A 5% methane level is 100% of LEL. Press KEY 0-Exit to return to previous screen.

9. From the Read Gas Levels Screen (Figure 5.12) press KEY 2-Continue for the Temperature Screen (Figure 5.14). Press KEY 1-Enter Temperature as shown on the following screen (Figure 5.15). This is read from the temperature gauge on the Accu-Flo Wellhead. Enter the three digit temperature value using the Number KEYS. (XXXo F or C depending on units selected.) For example, if the gas temperature is 95 degrees enter 095. Note all digits must be entered. When done press KEY 0-Continue and return to the screen shown in Figure 5.14. Ensure the differential and static pressures are stabilized before continuing. Press the KEY 2 to continue.

Figure 5.14

T——°F	1-EnterTemp
SP+0.45"	3-ZeroPressure
DP-00.0"	9-Last Data
0-Back	2-Continue

Note: If the optional temperature probe is used, it should be plugged into the RS-232 port on the right side of the GEM. It will automatically display the gas temperature without having to enter it as shown below.

Figure 5.15

EnterTemp

?-- °F

© 1993 Landfill Control Technologies, Corporate Headquarters 6055 E. Washington Blvd., Commerce, CA 94110 U.S.A. GEM-500 is a product trademark.

10. Press the 3 KEY - Zero Pressure before proceeding. This is necessary because by taking a LFG sample in the prior step, you have pressurized the impact port pressure transducers. Warning Disconnect hoses before zeroing screen will appear (Figure 5.16). Disconnect all the hoses from the wellhead. Press any key to continue.

Figure 5.16

```
WARNING: Disconnect
hoses before zeroing

Press any key
```

11. The following screen, which is also used in the General Utilities function, 2 - Zero Pressure will appear (Figure 5.17). Press KEY 1 to zero pressure. The Zeroed OK Screen is displayed for 3 seconds and then returns to the above screen. Press the KEY 0-Exit. This returns you to the Temperature/Pressure Screen.

Figure 5.17

```
     Static  +00.2"H20
Differential -0.30"H20
1-Zero Pressures
                0-Exit
```

Note: The units displayed will be inches of water column or MB depending on USA or Metric measurements units selected.

12. Press KEY 1 to zero pressure. The Zeroed OK screen is displayed for three seconds and then returned to previous screen (Figure 5.17) Press KEY 0-Exit. The Temperature/Pressure screen will appear (Figure 5.14).

13. Connect hoses as instructed previously. Allow instrument to read and press KEY 2-Continue which proceeds to the Flow/ Btu Screen (Figure 5.18). If no well I.D. exists, you can store at this point.

Figure 5.18

```
SCFM 0000 Btu OOO3/h REF
SCFM 0000 Btu OOO3/h ADJ
6-Store          8-Log
                 0-Back
```

Note: The units displayed will be SCFM (Standard Cubic Feet per Minute) and Btu (British Thermal Units) only if USA units are selected, otherwise units will be displayed in metric.

14. At this point, if you want to change the flow, adjust the control valve on the wellhead. Within a few seconds, the new flow is shown. When satisfied with the flow adjustment press the KEY 6-Store to display the Wellhead Comments Screen

© 1993 Landfill Control Technologies, Corporate Headquarters 6055 E. Washington Blvd., Commerce, CA 94110 U.S.A. GEM-500 is a product trademark.

(Figure 5.19). Press KEY 0-Back to return to the prior screens and review or re-take data.

Figure 5.19

```
Select Comments
Flex Hose
↑-Scroll Up        2-Select
↓-Scroll Down      0-Cont
```

15. There are eight potential comments that can be noted on the Wellhead Comments Screen shown above: Flex Hose, Valve, Casing Height, Well Bore Seal, Labeling, Air Leakage, Water Blockage, and Other. These brief notations can be made to remind the operator of maintenance or problems encountered at or near this well ID. Press KEY 2-Select to add the condition displayed on the screen to the data that is stored when KEY 0-Store is pressed. The Readings Stored Screen (Figure 5.20) is displayed for three seconds before returning to Flow/Btu Screen .

Figure 5.20

```
Readings Stored
```

Read Gas -Logging Function

Automatic gas data logging is possible with a GEM-500 as long as the batteries are charged. The logging function requires that the well being logged have an ID stored in the GEM-500. The logging time interval is from five to 60 minutes.

1. The well to be logged must have an ID already stored in the GEM-500. See the General Utilities instructions for function KEY 7-ID Maintenance. ID's can also be input as shown above during the Read Gas function already discussed above.
2. The hose to the gas sample port to the GEM-500 must be connected.
3. The Logging Screen is accessed from the Flow/BTU Screen (Figure 5.21). Press KEY 8-Log.

Figure 5.21

```
SCFM 0000 Btu OOO3/h REF
SCFM 0000 Btu OOO3/h ADJ
6-Store            8-Log
                   0-Back
```

4. The Logging Interval Screen appears as shown in Figure 5.22. Input a time interval of five to 60 minutes between sampling intervals from the GEM-500 Keyboard. If an unacceptable time is input (i.e. less than five minutes or more than 60 minutes), an "Invalid Duration - Please Enter Again" message is displayed for three seconds before returning to Figure 5.22.

© 1993 Landfill Control Technologies, Corporate Headquarters 6055 E. Washington Blvd., Commerce, CA 94110 U.S.A. GEM-500 is a product trademark.

Figure 5.22

Enter Required
Logging Interval
Min 05, Max 60 Mins
Interval = ??

5. The next screen (Figure 5.23) is used to select the running time of the GEM-500's pump. There are five choices ranging from 15 to 90 seconds as shown on the following screen (Figure 5.23). If an invalid time is input, an "Invalid Time - Please enter again" message will be displayed for three seconds before returning to the screen below. Input time and press KEY 0-Exit.

Figure 5.23

Select Running Time
for Pump
15, 20, 45, 60, 90 secs.
Time = ??

6. The Logging Screen is then displayed (Figure 5.24). Logging will continue as long as the battery power in the GEM-500 can power the pump. To end logging, press KEY 0-Stop Logging. When the logging function is ended, it returns to the Flow/BTU Screen (Figure 5.18). Note that unit will not operate accurately with charger plugged in and the last few readings before battery fails may be inaccurate.

Figure 5.24

LOGGING

0-Stop Logging

7. Press KEY 0-Stop Logging and the Flow/Btu Screen re-appears. Press KEY 0-Exit twice to return to the Main Menu.

© 1993 Landfill Control Technologies, Corporate Headquarters 6055 E. Washington Blvd., Commerce, CA 94110 U.S.A. GEM-500 is a product trademark.

© 1993 Landfill Control Technologies, Corporate Headquarters 6055 E. Washington Blvd., Commerce, CA 94110 U.S.A. GEM-500 is a product trademark.

Chapter 6-View/Print Data

The GEM-500 can be connected to a standard 132-column serial computer printer and produce a hard copy of the data stored in the memory. An optional cable is required. The data can also be viewed on the GEM-500's screen. Normally the Print function is done daily or before the GEM-500's memory is cleared in the General Utilities function 3 - Memory.

Note: Never make data or electrical connections between the GEM-500 and printer, a computer or battery charger with the power on. Both units should be turned off and the connections made before turning them back on.

View Data

1. From the Main Menu, select KEY 3-View/Print Data from the Main Menu Screen as shown in Figure 6.1.

Figure 6.1

```
1-General Utilities
2-Read Gas Levels
3-View/Print Data
4-Download Data
```

2. The Select Screen appears as shown in Figure 6.2. Choose KEY 1-View Data or KEY 2-Print Data. To return to the Main Menu Screen press KEY 0.

Figure 6.2

```
Please Select
1-View Data
2-Print Data
0-Main Menu
```

3. Press KEY 1-View Data from the Select Screen and the View Data Screen (Figure 6.3) appears. Press KEY 1 (With Specific ID) to see only one data point. Press KEY 5 to scroll through all the data.

Figure 6.3

```
VIEW DATA

1. With Specific ID
2. All Data
```

© 1993 Landfill Control Technologies, Corporate Headquarters 6055 E. Washington Blvd., Commerce, CA 94110 U.S.A. GEM-500 is a product trademark.

4. To select a specific ID, press KEY-1. As shown below, scroll through IDs by pressing KEY-1 and scroll through IDs by pressing KEY-1 (Figure 6.4) or manually entering ID by pressing KEY-3 (Figure 6.5).

Figure 6.4

```
ID XXXX XXXX
↓↑ - Scroll
2 - Select        0-Exit
```

Figure 6.5

```
Please Enter ID
F-Numbers/Letters
ID XXXX ----
```

5. Press KEY 1-View Data and the screen Enter existing ID code (already in memory) using number screen and/or letter screen:
   For numbers, press Number KEYS
   For letters, press arrow KEYS 1 or 6.
   Enter each letter by pressing KEY 0 (enter)
   Use Blue KEY to switch between letters and numbers.
   Press KEY 0 - Continue after entering ID.

6. If the data is not found, the following screen (Figure 6.6) is displayed.

Figure 6.6

```
No Reading for
XXXX XXXX

1-Another ID    O-Exit
```

7. If KEY 1 (With Specific ID) or KEY 5-All Data is selected in step 4 (above), the following screen (Figure 6.7) is displayed. Use KEYS 1 and 6 on the Keyboard to move up or down the data displayed. Press KEY 5 to toggle between the two screens of data available for each ID as shown previously.

© 1993 Landfill Control Technologies, Corporate Headquarters 6055 E. Washington Blvd., Commerce, CA 94110 U.S.A. GEM-500 is a product trademark.

```
USE: ↓↑-Scan      0-Exit
2-Go First      7-Go Last
5-Change data screen
Any key to continue
```

Figure 6.7

8. There are two data screens for each ID as shown below (Figures 6.8 and 6.9). KEY 5 toggles between the two data screens. Press the KEY 1-UP Arrow or KEY 6-Down Arrow to scroll through the data. Press KEY 0 to exit.

```
     ID XXXX XXXX
TAKEN   09:45  06/10/92
CH4 45.3%    CO2 48.1%
O2  01.6%      BAL 5.0%
```

Figure 6.8

```
SP + 05.8"      DP  +0.00"
T  095°
Scfm 115   Btu 000/h ref
Scfm 435   Btu  000/h adj
```

Figure 6.9

Print Data

1. If data is to be printed, connect RS-232 cable (provided) from the GEM-500 RS-232 port to the printer converter. The converter should be connected so the arrows point towards the printer as indicated on converter label. Connect the converter to the 25-pin input port of 80 column printer (Figure 6.10). To support RS-232 communications, the printer should have the following settings selected: Baud Rate-2400, Data Bits-8, Parity-none, one stop bit. Turn printer on. Turn GEM-500 on.

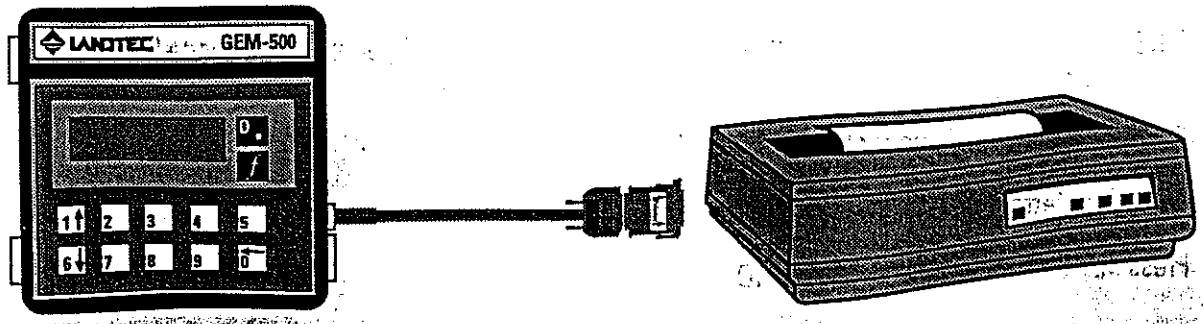

Figure 6.10

© 1993 Landfill Control Technologies, Corporate Headquarters 6055 E. Washington Blvd., Commerce, CA 94110 U.S.A. GEM-500 is a product trademark.

2. From the Main Menu Screen select KEY 3-View/Print Data from the Main Menu Screen.

3. The Select Screen appears as shown below (Figure 6.11). Choose KEY 1-View Data or KEY 2-Print Data. To return to the Main Menu Screen press KEY 0.

Figure 6.11

```
Please Select
1-View Data
2-Print Data
0-Main Menu
```

4. Press KEY 2-Print Data and the next screen will appear (Figure 6.12). Press KEY 1-With Specific ID to print only one data point. Press KEY 5 to print all the data.

Figure 6.12

```
PRINT DATA

1. With Specific ID
2. All Data
```

5. The next screen (Figure 6.13) shows the results if KEY 1 is pressed. To scroll through the ID list, press KEY-1 or KEY 2 to manually enter the ID.

Figure 6.13

```
Manually Enter ID or
Scroll Through?

1-Scroll    2-Manual
```

6. If KEY-2 is pressed, the following screen (Figure 6.14) is displayed. Enter existing ID code (already in memory) using number screen and/or letter screen.

For numbers, press Number KEYS
For letters, press arrow KEYS 1 or 6.
Enter each letter by pressing KEY 0 (enter)
Use Blue KEY to switch between letters and numbers.
Press KEY 0 - Continue after filling in ID.

© 1993 Landfill Control Technologies, Corporate Headquarters 6055 E. Washington Blvd., Commerce, CA 94110 U.S.A. GEM-500 is a product trademark.

Please Enter ID
Numbers/Letters
ID XXXX----

Figure 6.14

Note: In the steps below, if the printer cannot print (no paper, etc.) a printer-error screen will appear on the GEM-500. Press KEY 6-RETRY or press KEY 0-Exit to end

7. If KEY 5-All Data is selected in step 2, the following screens are displayed depending on the stage of printing (Figures 6.16, 6.17 or 6.18).

Printing-Please Wait

Figure 6.16

Printing Aborted

0-Exit

Figure 6.17

Printing Complete

0-Exit

Figure 6.18

© 1993 Landfill Control Technologies, Corporate Headquarters 6055 E. Washington Blvd., Commerce, CA 94110 U.S.A. GEM-500 is a product trademark.

Output - Print Report Format

The report format is shown below. The stored data is sorted by time, date, and ID

Time	Date	ID	CH4	CO2	O2	Bal	Pressures		Old			Adjusted	
		%	%	%	%	Stat " H2O	Diff " H2O	Temp _F	Flow Scfm	BTU /cf	Flow Scfm	BTU /cf

© 1993 Landfill Control Technologies, Corporate Headquarters 6055 E. Washington Blvd., Commerce, CA 94110 U.S.A. GEM-500 is a product trademark.

Chapter 7-Download Data

This procedure covers the electrical connection of the GEM unit to IBM PC compatible host computer via an RS-232 cable, installation of the GEM software program (contained on READ_GEM floppy disk) into a file on the compatible host computer, calling up the file on the host computer's screen, and then downloading data from GEM unit into host computer by following instructions on the GEM's screen and on the computer.

Information is normally downloaded after each days' readings are taken. The stored data is also downloaded before the GEM's memory is cleared because it is full (see General Utilities -3 Memory).

Note: Never make data or electrical connections between the GEM and printer, a computer or battery charger with the power on. Both units should be turned off and the connections made before turning them back on.

The optional RS-232 cable is plugged into the GEM using a special plug. The temperature probe, battery charger and RS-232 cable all use the same input plug. Do not try and substitute any other cables or plugs than ones provided by LANDTEC. The plug end of the RS-232 cable that goes into the host computer is a standard serial cable. Plug it into the serial port when the computer is turned off.

Installing the Download Program on the Host Computer

LANDTEC's UNI-DOWN program software converts the binary data from the GEM-500 to ASCII format. Data in ASCII format can be imported into LOTUS* 1-2-3TM, Excel*TM and many other programs that accept comma delimited data files. LANDTEC is currently developing a pc based landfill data management system that will upload the GEM files into a database to produce management and regulatory reports.

1. Turn on host computer and go to DOS (Disk Operating System) prompt.
2. Insert LANDTEC's GEM download floppy disk into host computer floppy drive.
3. Install the GEM software into a sub-directory of your choice, using the drive of your choice, by typing the following instructions in bold face (assuming drive A was the floppy where the source diskette is located and C was chosen as the destination drive).
   C:\>MD GEM <ENTER>
   C:\>CD GEM <ENTER>
   C:\>GEM> COPY A:*.* <ENTER> C:\GEM<ENTER>
4. Remove the diskette in drive A. Store it in a safe place. You may want to make a duplicate of it as a backup.
5. GEM software program is now installed on the host computer.

Starting the Download Program on the Host Computer

1. Turn off the computer and attach the serial connector to COM Port 1 or 2 of the computer. Plug the RS-232 connector into the GEM and connect the remaining end of connector to the RS-232 connector as shown in Chapter 6, Figure 6.10. Turn on the host computer.
2. At the C> prompt on the host computer, change to the GEM sub-directory by typing:
   C:\> CD GEM <Enter>
   C:\> READ_GEM<Enter> If connected to COM Port 1
   or READ_GEM COM2 <Enter> If connected to COM Port 2.
   or READ_GEM SPLIT <Enter> If time/date field to be split (see below)
   or READ_GEM SPLIT COM2 <Enter> If time/date field to be split on COM Port 2
   The preferred version is READGEM SPLIT.
3. The next screen to appear is shown as Figure 7.1. The screen is somewhat confusing. The message on the right side is discussing a feature in the software which selectively downloads data by ID Code, by time or by date. If the GEM contains data from two different landfills, OTAY and OXND, by filling in the first part of the code below with OXND XXXX, only the data from OXND will be downloaded.

Note: If only the data taken on a specific day were desired, by filling in the date in the proper field, would download only that data from the GEM. This might be in response to a request for listing all the reads taken on a specific day. It is similar for selecting a specific time. Various fields may be combined in any manner for a selective sort of GEM data on this screen.

© 1993 Landfill Control Technologies, Corporate Headquarters 6055 E. Washington Blvd., Commerce, CA 94110 U.S.A. GEM-500 is a product trademark.

Figure 7.1

GEM Readings Transfer Utility Version 1.1 09/06/93	
Please prepare to download readings from the GEM readout: 1) Switch on the GEM. 2) Connect RS-232 link to COM 1. 3) Press KEY 0. 4) Select option 4-Download data by pressing KEY 4. 5) Wait for data to be received. WAITING	Press RETURN to download all data from the unit. Press "?" to examine data. It is also possible to store only data based on the following: Code, Time, Date. Using the arrow keys, position the cursor then enter the correct digit. Only files where the data entered corresponds to the data in a file will be downloaded. Where "X" equals any digit. Code Time Date **** **** **.** **/**/**
Landfill Control Technologies	
Press ESC to exit.	

4. When done with any selective sorting discussed in step 3, press the Enter Key on the host computer and proceed as follows.

5. Turn on the GEM after the RS-232 Cable has been connected to both the computer and the GEM. Press the RED ON/OFF switch on the GEM. After the normal Warning Screen the RS-232 MODE Awaiting Instruction Screen appears (Figure 7.2). Press KEY 0 to proceed to the Main Menu Screen. Press KEY 4 - Download Data and the screen shown below appears on the GEM.

Figure 7.2

RS-232 MODE

Awaiting Instruction from computer

6. Meanwhile, the host computer's screen appears as shown in step 3 above. A message appears on the right side saying Reading Download xxx. As each record is read the xxx digits keep increasing until all the data is read into a temporary file in the host computer.
7. By pressing the Shift, the data can be scanned on the host computer (Figure 7.3). The data scan screen is shown below. The down cursor arrow (or up cursor arrow) can be used to scroll through each ID record that was downloaded.

© 1993 Landfill Control Technologies, Corporate Headquarters 6055 E. Washington Blvd., Commerce, CA 94110 U.S.A. GEM-500 is a product trademark.

Figure 7.3

```
GEM Readings Transfer Utility Version 1.1        09/06/93

ID: OTAY0809      13:00 08/09/93
CH4: 40.6%
CO2: 28.0%        Static: -3.5"H20
O2: 0.2%
Cal: 31.2%        Diff'l: +.34"H20
Temp: 96°F

Old Flow: 21 Scfm
Adj Flow: 19 Scfm
Old Energy 140 Btu/cf
Adj Energy: 129 Btu/cf

Landfill Control Technologies
Press ESC to exit.
```

8. This step is CRITICAL. Press the <Enter> key on the host computer. A box is displayed and a file name of up to eight characters plus three character extension must be input. Press <Enter> after inputting file name. Otherwise, the temporary file in the host computer is not saved. An example is shown as Figure 7.4.

Figure 7.4

```
GEM Readings Transfer Utility Version 1.1        09/06/93

Please prepare to download readings
from the GEM readout:
1) Switch on the GEM.
2) Connect RS-232 link to COM 1.
3) Press KEY 0.
4) Select option 4-Download data
   by pressing KEY 4.
5) Wait for data to be received.

WAITING

Press RETURN to download all data
from the unit. Press "?" to examine
data. It is also possible to store only
data based on the following: Code,
Time, Date. Using the arrow keys,
position the cursor then enter the
correct digit. Only files where the data
entered corresponds to the data in a
file will be downloaded. Where "X"
equals any digit.

OTAY0809.PRN

Landfill Control Technologies
Press ESC to exit.
```

9. The GEM can be turned off after the data is downloaded. It can now be unplugged and returned to service or re-charged with the battery charger as required.
10. By pressing the ESC key SEVERAL TIMES on the host computer. You can back out of the download program to the DOS C> prompt.
11. A daily back-up or download is strongly recommended.

© 1993 Landfill Control Technologies, Corporate Headquarters 6055 E. Washington Blvd., Commerce, CA 94110 U.S.A. GEM-500 is a product trademark

Chapter 8-GEM-500 Well ID Manager

This software allows ID information to be sent to and from the GEM readout. ID information can be entered on a computer, stored to disk, and transferred to the GEM. ID information in the GEM can be downloaded to the computer, edited, stored to disk, and sent back to the GEM.

User Control

The software is controlled from a menu of options. The user selects the option using the cursor keys. A detailed description of the menu appears at the bottom of the screen. Main menu options include:

- Well ID Function
- User Defined Comments
- Clear Function
- Show GEM Memory Statistics
- Configure
- Exit

Connecting the Computer to the GEM

Connect the RS-232 download lead to the desired COM port of your computer, and connect the 'Lemo' connector to your GEM. Select option 4-Download from the main menu of the GEM.

Installing the software on a hard disk

Insert the disk in drive A: and create a directory on the hard disk for the software, and copy the program file on to the hard disk:

C:\> MD GEM	[Enter]	Create a directory
C:\> COPY A:*.* GEM	[Enter]	Copy the files
C:\> CD GEM	[Enter]	Change to the directory
C:\> IDBRIDGE	[Enter]	Run the software

Select the Set default COM port option from the menu on the PC software. Select either COM1 or COM2. The software is now ready for communications.

Well ID Functions

Create New ID Set

This option allows a completely new ID set to be created ready for transfer to GEM or storage to disk. The Well ID Functions window is displayed. You may now enter well ID information. See the Edit ID Information section for details about entering and editing ID data.

Edit ID Information

The option also ID data to be edited using the computer, ready for saving to disk or transfer to GEM. The currently loaded ID set is displayed. If there are more IDs than fit in the screen the user can scroll through the list using the Page Up and Page Down keys. All ID codes must have 8 characters and the characters must be either A..Z or 0..9. To select a flow type use the left or right cursor keys to select the flow type field. A list of available flow types is displayed, use the up and down cursor keys to select the desired type and the press Enter or left/right cursor key to store the selection. It is only possible to move the cursor on to a different ID when a valid entry has been made. A beep sound is made if an ID entry is invalid. Correct the mistake before continuing. Press F2 to store the changes to the ID information into the computer's memory. You will now need to either select Save IDs to disk or Send IDs to GEM option.

© 1993 Landfill Control Technologies, Corporate Headquarters 6055 E. Washington Blvd., Commerce, CA 94110 U.S.A. GEM-500 is a product trademark.

Send IDs to GEM

This option allows the currently loaded (from GEM or disk) ID set to be transferred to the GEM. The user will be prompted to select option 4-Download on the GEM if this has not already been done. The data will then be sent to the GEM. The ID codes will be displayed as they are transferred.

Receive IDs from GEM

This option allows IDs already stored in the GEM to be downloaded to the computer for storage to disk or editing. The software will prompt the user to select option 4-Download if this has not already been done. The ID code for each GEM ID will be shown as the computer receives it. Once all of the IDs have been read they will be shown in the edit screen. You can now edit the data, or press Esc to return to the main menu. To store the data to disk select the Save IDs to disk option. For editing ID data see the description under Edit ID Information.

Save IDs to Disk.

This option will store to disk, in an 'ASCII' file, the currently loaded ID information. Cursor must be under last code entered (use arrow key) to save ID. A file selector is displayed for the user to select a file. Enter a new filename or select a previously saved file. Then press enter, the file has now been stored. The files are stored to disk in an ASCII format. The file can be edited using any ASCII text editor, i.e. one that does not introduce control characters into the file. When editing these files manually it is important to note that the flow types must be one of the following, and must be entered correctly. Also for Orifice Plates the first value is the Pipe Inside Diameter.

Flow Types
ACCUFLO-1V
ACCUFLO-1H
ACCUFLO-2V
ACCUFLO-2H
ACCUFLO-3V
ACCUFLO-3H
ORIFICE PLATE
PITOT TUBE
USER INPUT

Note: The file name entered should always have the extension .IDM. unless the user specifically enters something different, however only files with the IDM extension are displayed in the file list.

Load IDs from Disk

This option allows previously saved data to be loaded into the computer for editing or transfer to GEM. The software will display a file selector showing all files with the filename extension IDM (all ID files must have this extension). Use the cursor keys to select the desired file and press Enter. If you know the filename you may type the name directly. Once the file is loaded, the Edit option shows the ID information. You can press Esc to return to the main menu.

Note: If an ID that already exists is sent to the GEM, the one in the memory of the GEM will be overwritten. If the ID does not already exist it will be appended to the list in the GEM. Transfer will be aborted if there is insufficient memory in the GEM to store all ID codes and an error message will be displayed on the PC.

Clear Functions

Clear IDs in GEM

This option will delete the ID information in the GEM. Select the option and press F1 to delete the ID information.

Clear readings in GEM

This option will delete the readings in the GEM. Select the option and press F1 to delete the all readings.

Clear User Defined Comments in GEM

Erases user defined comments in GEM.

© 1993 Landfill Control Technologies, Corporate Headquarters 6055 E. Washington Blvd., Commerce, CA 94110 U.S.A. GEM-500 is a product trademark.

Show GEM Memory Statistics

This option shows how much unused memory the GEM has, also the amount of memory used by IDs and by readings. The available memory is shared between readings and IDs, so the more IDs in the GEM, the less memory is available for data.

NOTE: If changes have been made to the ID information the computer will warn the user before either Exiting, Loading IDs from disk, or receiving IDs from the GEM. This option should be used with caution as it is not possible to retrieve the data once it has been deleted.

Configure

Configuration File

The configuration file contains the default parameters for Data Directory, COM port, and Units (metric or imperial).

File Format (GEM.INI)
[GEM ID Manager]
Path=directory name
Port=n
Units=type
where, n is either 1 for COM1 or 2 for COM2
type is either 'metric' or 'imperial'

Set Units to Imperial/Metric

This option is swaps between metric and imperial units when editing the ID information. The state of this option is stored to disk in a configuration file and so will be used the next time the software is loaded.

Set Data Directory

The default data directory is used to define which path name is used for Load IDs from disk and Save IDs to disk options. The path name is stored in a configuration file and is used next time the software is loaded.

Set default COM Port

This option allows either COM1 or COM2 to be used for RS-232 communications. Press '1' for COM1 or '2' for COM2. This setting is stored in a configuration file.

Sort Well IDs

Option On/Off enables well IDs to be sorted alphabetically after being received from the GEM.

User Defined Comments

1. Create new comments. Create new set of user defined comments.
2. Edit Comments.
3. Send comments to GEM.
4. Receive comments from GEM.
5. Save comments to disk.
6. Load comments from disk.

© 1993 Landfill Control Technologies, Corporate Headquarters 6055 E. Washington Blvd., Commerce, CA 94110 U.S.A. GEM-500 is a product trademark.

© 1993 Landfill Control Technologies, Corporate Headquarters 6055 E. Washington Blvd., Commerce, CA 94110 U.S.A. GEM-500 is a product trademark.

Chapter 9-Maintenance

Servicing

The unit has been electronically and functionally tested before leaving the factory. It is recommended that with normal usage, the GEM-500 be serviced every six months for routine factory servicing, maintenance and re-calibration.

Cleaning

The polycarbonate membrane panel may be wiped clean with soapy water and a damp cloth if required. We do not recommend any other cleaning agents. Protect the GEM-500 by keeping it in its protective soft case.

Sunlight and Heat

The unit should not be left out in direct sunlight for long periods of time as this will raise the temperature inside the case which could cause damage to components. The GEM-500 may not operate or may operate erratically if it gets too hot. Let it cool before trying to use it.

Dustcaps

Always keep the protective dust caps in place when ports and connectors are not in use.

Filters

The unit is equipped with two filters. One filter is external to the GEM-500. It is in-line in the sample hose. The filter is easily accessed by unscrewing the filter holder. A second filter is inside the GEM-500 and is located just inside the sample port inlet. This filter can be accessed by unscrewing (counter-clockwise) the port using a screwdriver or a small coin. Both filter holders are sealed with o-rings. Periodically inspect the o-rings to check their condition. Replace the o-rings if they become nicked, cut, swelled or otherwise damaged. The GEM-500 unit is shipped with a spare filter of each type. Only genuine LANDTEC filters should be used.

Replace the filter when the sample pump has difficulty drawing a sample of gas into the unit and a "Flow Fail" message appears on the screen and a continuous audible warning is heard.

If the filter becomes wet a "Flow Fail" message appears on the screen and a continuous audible warning also be heard.

Storage and Travel

Store the GEM-500 in its protective hard case when taking it from site to site. This offers maximum protection and brings along all the required accessories for the GEM-500. The GEM-500 is a delicate instrument. When charging the battery overnight, the GEM-500 can be stood upright or laid flat. If the unit is to be stored for a long period, charge the internal batteries prior to storage. Re-charge the unit every two months during storage and store flat or the oxygen sensor may ultimately dry out. This condition can be corrected with normal use.

Battery Charging

Please follow these instructions carefully.

1. The internal battery pack of the GEM-500 is designed to be recharged many times but as with all nickel-cadmium cells, certain rules should be observed or the batteries will not provide their full power or operating time.
2. Let the batteries almost fully discharge before re-charging. Do not top off an almost full battery charge or memory patterns will be established and the battery will not provide its full capacity.
3. When charging the batteries, let them charge at least 12 hours, 14 hours is preferred.
4. Never let the batteries charge for more than three or four days.
5. Disconnect the charger from the GEM-500 after the batteries have charged.
6. Never try to operate the GEM-500 while the batteries are re-charging.

© 1993 Landfill Control Technologies, Corporate Headquarters 6055 E. Washington Blvd., Commerce, CA 94110 U.S.A. GEM-500 is a product trademark.

Warning: Only charge a GEM-500 with a LANDTEC Battery Charger (provided with the unit).

Note: Heat from the battery compartment makes the front of the GEM-500 (where the GEM-500 label is located) warm to the touch while the batteries are charging.
Note: If the GEM-500 is repeatedly given small "top-off" charges, the battery capacity can be reduced. To restore the battery to full capacity, totally discharged the unit and then charge it for a full 14 hour period. Prior to recharging the unit, run the pump to completely discharge the battery.

Battery Shut-Off

A circuit within the GEM-500 continuously monitors the battery voltage. If the battery voltage falls below a predetermined level, the unit will automatically shut itself off in order to prevent memory loss. If the unit shuts itself of, the unit requires a full charge of 14 hours to restore the battery to its maximum level.

Battery Low Symbol

There is a Battery Symbol used on the top right corner of the GEM-500's display screen. It displays as the battery capacity reaches about 10% of full charge. There are only about 30-45 minutes of full pump power left in the GEM-500 when the symbol is displayed.

Automatic Power-Off

The GEM-500 has an automatic power-off timer to conserve battery power. If no key is pressed for 15 minutes, the unit will automatically switch itself off (no stored readings will be lost).

Emergency Battery Power

In emergencies, the GEM-500 may be operated with 6 "C" sized alkaline batteries. To use alkaline cells, remove the nickel-cadmium battery pack by using a Phillips screw driver on the back battery compartment of the GEM-500. Insert the alkaline battery "C" cells.

WARNING: Do not use the battery charger for standard alkaline batteries—they can explode if recharged.

© 1993 Landfill Control Technologies, Corporate Headquarters 6055 E. Washington Blvd., Commerce, CA 94110 U.S.A. GEM-500 is a product trademark.

Chapter 10-Troubleshooting

The GEM-500 does not turn on or operates erratically

The unit may be too hot

Do not leave in car trunks or expose to high temperatures.

The batteries are so low that they will not display any screens

This is done to protect the GEM-500's memory. Recharge the unit for 14 hours.

The GEM-500 Displays ****** or >>>> in Some Fields

The GEM-500 substitutes the symbols because there is no valid information to display. Typically a temperature needed to be input or a pressure reading is required to calculate flow. If data is missing the symbols are substituted.

The Screen Says "FLOW FAIL" With a Continuous Audible Warning

One or more of the GEM-500's filters are blocked and need to be changed. The filters may be dirty or wet. Change the filters as instructed in Section 8 - Maintenance.

The Carbon Dioxide Readings Drift Erratically

Leave the GEM-500 in its soft case. Do not place a heat source (including placing the GEM-500 on very hot soil, or the palm of your hand being placed on the back of the GEM-500) on the back of the GEM-500 below the battery compartment. If it persists after the above problems have been corrected, perform a Field Calibration.

The Readings Taken by GEM-500 are Not What is Expected

Use Calibration Gas to test your GEM. With its known composition, you will immediately know the if the GEM-500 is in calibration. Field Calibration may be necessary. Once you have extablished the accuracy of the GEM-500 on calibration gas, you should accept the results it is providing.

© 1993 Landfill Control Technologies, Corporate Headquarters 6055 E. Washington Blvd., Commerce, CA 94110 U.S.A. GEM-500 is a product trademark.

© 1993 Landfill Control Technologies, Corporate Headquarters 6055 E. Washington Blvd., Commerce, CA 94110 U.S.A. GEM-500 is a product trademark.

Chapter 11-Measurement Units and Specifications

Measurement Units

Screen 1

Type	Displayed As	USA (Imperial)	Metric (SI)
Methane	CH_4%	% by volume	% by volume
Carbon Dioxide	CO_2%	% by volume	% by volume
Oxygen	O_2%	% by volume	% by volume
Balance	BAL	% by volume	% by volume

Screen 2

Type	Displayed As	USA (Imperial)	Metric (SI)
Methane	CH_4%	% by volume	% by volume
Lower Explosive Limit	CH_4% LEL	% of 5% CH_4	% of 5% CH_4

Screen 3

Type	Displayed As	USA (Imperial)	Metric (SI)
Static Pressure	SP"	"w.c. (H_2O)	mb (millibar)
Differential Pressure	DP"	"w.c. (H_2O)	mb (millibar)
Temperature	T °F/°C	°F (degrees Farenheit)	°C (degrees Celsius)

Screen 4

Type	Displayed As	USA (Imperial)
Old (past) BTU	BTU OLD	per cubic foot
Old (past) BTU	KJ OLD	per cubic meter
Old (past) Gas Flow	scfm Feet	std. cubic feet per min.
Old (past) Gas Flow	scfm OLD	std. cubic meters per min.
Adj. (present) BTU	BTU ADJ	per hr.
Adj. (present) BTU	KJ ADJ	per hr.
Adj. (present) Gas Flow	scfm ADJ	std. cubic feet per min.
Adj. (present) Gas Flow	scfm OLD	std. cubic meters per min.

Operating Temperature

10 to 104° F/-10 to 40° C

Range and Resolution

	Sensor Range Imperial	Resolution Imperial
Methane	0-100%	0.1
Carbon Dioxide	0-50%	0.1
Oxygen	0-25%	0.1
Pressure-Differential	0-10 "w.c.	0.01
Pressure-Static	0-100 "w.c.	0.1

Accuracy

Concentration	% Methane by Volume	% Carbon Dioxide by Volume	% Oxygen by Volume
5% (LEL CH_4)	0.5%	0.5%	1.0%
15% (UEL CH_4)	1.0%	1.0%	1.0%
100%	3.0%	3.0%	n/a

© 1993 Landfill Control Technologies, Corporate Headquarters 6055 E. Washington Blvd., Commerce, CA 94110 U.S.A. GEM-500 is a product trademark.

© 1993 Landfill Control Technologies, Corporate Headquarters 6055 E. Washington Blvd., Commerce, CA 94110 U.S.A. GEM-500 is a product trademark.

Chapter 12-Field Operations

Landfill Gas Generation

A brief overview of the theory of landfill gas generation and methane recovery follows.

Initially, when decomposable refuse is placed into a municipal solid waste landfill, the refuse is emplaced with air from the surrounding atmosphere. Through a natural process of bacterial decomposition the oxygen from the air is consumed and an anaerobic (oxygen free) environment is created within the landfill. This anaerobic environment is one of several conditions necessary for the formation of methane.

If oxygen is reintroduced into the landfill, those portions are returned to an aerobic (oxygen present) state and the methane producing bacteria population are destroyed. A period of time must pass before the productive capacity is returned to normal. Since there is some methane of a given quality within the landfill void space, a decline in methane quality is only gradually apparent depending upon the size of the landfill.

Carbon dioxide is also produced under either an aerobic or anaerobic conditions. Under static conditions, the landfill gas will be composed of roughly half methane and half carbon dioxide with a little nitrogen.

As air is introduced into the landfill, the oxygen is initially converted to carbon dioxide and a nitrogen residual remains. Measurement of residual nitrogen is usually a good indicator of the anaerobic state of the landfill, however, it cannot be directly measured. It can however be assumed and estimated, using a subtraction basis, as the balance gas. Hence, measurement of carbon dioxide is an intermediary step. Because carbon dioxide levels may fluctuate depending on the changing concentrations of the other constituent gases, carbon dioxide levels are not evaluated directly but are considered in light of other data.

In evaluation of residual nitrogen, allowances must be made if there has been any air leakage into the gas collection system or if there has been serious overpull. If enough air is drawn into the landfill, not all oxygen is converted into carbon dioxide and the oxygen is apparent in the sample. It is ideal to perform routine analysis of individual wells, as well as an overall well field composite sample, by gas chromatograph. This is not always practical at every landfill.

Under some conditions there may be a small amount of hydrogen in the LFG, (about 1 percent, usually much less). This may affect field monitoring response factors, but otherwise it can be ignored.

Subsurface Fires

If very large quantities of air are introduced into the landfill, either through natural occurrence or overly aggressive operation of the LFG system, a partly unsupported subsurface combustion of the buried refuse may be initiated. Subsurface fire situations are difficult to control or extinguish once started, present health and safety hazards, and can be quite costly. Therefore, prevention by good operation of the collection system and maintenance of the landfill cover is the best course of action. The presence of carbon monoxide is an indicator of poorly supported combustion within the landfill.

Techniques for Controlling Landfill Gas

There are many techniques for controlling landfill gas extraction. These techniques represent tools which are used together to control landfill gas. The Accu-Flo™ Wellhead is designed to work with all of these techniques. Below is a discussion of the individual techniques, how to use them and their limitations. Reliance on only a few of the techniques discussed can lead to misinterpretation of field data and mis-operation of the wellfield. Later we will discuss the best use of these techniques to optimize landfill gas control.

Controlling by Wellhead Valve Position

Unless the valve handle is calibrated for a given flow rate, this method is unreliable. The position of the valve handle alone does not provide sufficient information about the wellfield to control it. It is useful to note the relative position of the valve, and essential to know which valves are fully open or closed.

Controlling by Wellhead Vacuum

This technique relies on the relationship of well pressure/vacuum to flow for a given well. Reliance upon this method, however, can be misleading. This is because the square root relationship between flow and pressure is difficult to relate to while performing day-to-day wellfield adjustments. As decomposition, moisture, and other conditions change this method shows itself to be inadequate and imprecise.

© 1993 Landfill Control Technologies, Corporate Headquarters 6055 E. Washington Blvd., Commerce, CA 94110 U.S.A. GEM-500 is a product trademark.

Controlling by Gas Composition

This method determines methane, nitrogen (balance gas) and other gas composition parameters at wellheads and at recovery facilities using portable field instruments and sometimes analytical laboratory equipment. Complete knowledge of gas composition (i.e., major fixed gases: methane, carbon dioxide, oxygen and nitrogen) is desirable. It is also necessary to check other gas parameters such as carbon monoxide to fully evaluate the condition of the wellfield. Reliance on this information can lead to mis-operation of the wellfield. Indications of excessive extraction often do not show up right away. This method often leads to a cycle of damage to the methane producing bacteria population and then to overcorrection. This cycling of the well and producing area of the landfill is not a good practice. It leads to further misinterpretation of the condition of the wellfield and has a disruptive effect on the operation of the wellfield. The use of analytical laboratory instrumentation such as a gas chromatograph is a valuable supplementary tool to verify gas composition. This normally requires collection of samples at the wellhead and analysis at some fixed location where the equipment is located. The drawbacks of this method as a primary means of obtaining information for wellfield adjustment are time expended, cost, and probably most important, responsiveness to the needs of the wellfield for timely adjustment. The laboratory analysis ownership of the equipment required is also costly. Some analysis is recommended for verification of field readings from time to time. A monthly sample of the composite gas composition at the inlet to the flare/gas recovery facility is recommended.

Controlling by Flow Rate

This is a more exact technique for determining and adjusting gas flow at individual wells. It requires using a fixed or portable flow measurement device at each wellhead to obtain data needed to calculate volumetric (or mass) flow rates. It is normally convenient to use cubic feet per minute, or per day, as a standard unit of measure for volumetric flow. It is important to distinguish between the volumetric quantity of landfill gas and the volumetric quantity of methane extracted from each well and the landfill in total. The two variables are somewhat independent of each other and it is the total quantity of methane extracted which we are interested in. It is possible for the total quantity of landfill gas extracted to increase while the total quantity of methane extracted decreases. To monitor this we can calculate the quantity of methane extracted, (LFG flow x percent methane) or the quantity of BTUs, (British Thermal Units, a standard measurement unit of heat energy), recovered per hour, (LFG flow x percent methane x BTUs per cubic foot of methane x 60 minutes per hour). It is conventional to measure BTU's per hour as a unit of time. There are approximately 1012 BTUs of heat per cubic foot of pure methane (like natural gas), although this figure varies a little among reference texts.

Measuring flow is an essential part of monitoring and adjusting a wellfield. The well should be adjusted until the amount of methane recovered is maximized for the long term. A greater amount of methane or energy can usually be recovered over the short term, however, this ultimately leads to diminishing returns. This is seen in stages as increased CO_2 and gas temperature and later as increased oxygen from well overpull. In time, the methane will also decline. This is a result of a portion of the landfill, usually at the surface, being driven aerobic. In this portion of the landfill, the methane producing bacteria will have been destroyed (due to the presence of oxygen). With the methane-producing capacity of the landfill reduced, the pore space in the area no longer producing may become filled with landfill gas equilibrating (moving in) from an unaffected producing area. This leaves the impression that more gas can be recovered from this area, and may lead to the operator opening the well or increasing flow.

Wellfield Monitoring

The frequency of LFG wellfield monitoring will vary depending upon field requirements and conditions. Normal monitoring frequency for a complete field monitoring session with full field readings (suggested normal and abbreviated field readings list follows) will vary from typically once a month to once a week. Well field monitoring should not normally be extended beyond one month. The importance of regular, timely monitoring cannot be overemphasized.

Typical Field Readings

- Name of person taking readings
- Date/time of each reading
- Methane (CH_4)
- Oxygen (O_2)
- Carbon dioxide (CO_2)
- Balance Gas (primarily nitrogen N_2)
- Wellhead gas temperature (flowing)
- Ambient temperature
- Static pressure (PS) (from GEM-500 or magnehelic)
- Velocity head (P or PT) (from GEM-500 or pitot tube and magnehelic)

© 1993 Landfill Control Technologies, Corporate Headquarters 6055 E. Washington Blvd., Commerce, CA 94110 U.S.A. GEM-500 is a product trademark.

- Wellhead gas flow (from GEM-500, or pitot tube & magnehelic, or anemometer/velometer)
- Wellhead adjustment valve position (initial and adjusted)
- New wellhead vacuum and flow information after adjustment
- Calculation of each well's LFG and methane flow and sum total.
- Observations/comments.

Additionally, carbon monoxide (CO) or hydrogen sulfide (H2S) readings may be taken if problems are suspected. Supplementary monitoring once to several times a week may be performed using an abbreviated form of field readings.

Abbreviated Field Readings

- Name of person taking readings
- Date/time of each reading
- Methane (CH4)
- Oxygen (O2)
- Wellhead gas temperature (flowing)
- Ambient temperature
- Static pressure (Ps) (from GEM-500, GA-90 or magnehelic)
- Velocity head (P or Pt) (from GEM-500 or pitot tube and magnehelic)
- Wellhead gas flow (from GEM-500, or pitot tube and magnehelic, or anemometer/velometer)
- Wellhead adjustment valve position (initial and adjusted)
- New wellhead vacuum and flow information after adjustment.
- Observations/comments

Line vacuums and gas quality may be taken at key points along the main gas collection header and at subordinate branches. This helps to identify locations of poor performance, excessive pressure drop or leakage. Perform systematic monitoring of the wellfield, taking and logging measurements at each wellhead and major branch junction in the collection system.

During monitoring, examine landfill and gas collection system for maintenance issues. Record needed maintenance or unusual conditions. Examples of unusual occurrences or conditions are: unusual settlement, signs of subsurface fires, cracks and fissures, liquid ponding, condensate/leachate weeping from side slopes, surface emissions and hot spots, and liquid surging and blockage in the gas collection system. Field readings should be kept in a chronological log as well as turned into management on a timely basis.

Wellfield Adjustment Criteria

There are several criteria used in wellfield adjustment. The primary criteria is methane quality. Methane quality is an indicator of the healthy anaerobic state of the landfill and thus proper operation of the LFG collection system. However, a decline in the healthy productive state of the landfill is usually not immediately apparent from methane quality. Because of this we must consider several criteria at once.

Following are wellfield adjustment criteria for consideration.

- Methane quality (ranging from 46 percent upwards)
- The degree to which conditions within the landfill favor methane production. Typical conditions include: pH, temperature, general cover quality, moisture conditions, waste stream characteristics, placement chronology, insulation characteristics, etc.
- Oxygen quality (ranging below 1 percent, preferably less then 1/2 percent)
- Landfill cover porosity and depth in the proximity of the well
- Landfill construction factors including type of fill, size and shape of refuse mass, depth of fill, compaction, leachate control methods
- Seasonal, climatic, geographical, and recent weather, or other considerations, including seasonally arid or wet conditions, precipitation, drainage, groundwater
- Surrounding topologic and geologic conditions
- Proximity of the well to side slopes (within 150 to 200 feet and less may require conservative operation of the well)
- Nitrogen (typically 8 to 12 percent and less)
- Temperature (between ambient and about 130 °F.)

© 1993 Landfill Control Technologies, Corporate Headquarters 6055 E. Washington Blvd., Commerce, CA 94110 U.S.A. GEM-500 is a product trademark.

- LFG and methane flow from the wellhead
- The design of the gas collection system
- Landfill perimeter gas migration and surface emission control, or energy recovery objectives
- Fluctuation in the diurnal cycle of atmospheric pressure.

Establishing Target Flows

For a given individual well, a target flow is established which will likely support maintenance of methane and oxygen quality objectives while maximizing the recovery of landfill gas. Typically small adjustments are made in flow to achieve and maintain quality objectives. The well must not be allowed to overpull. High well temperatures, (about 130 to 140 °F and greater), are an indication of aerobic activity and thus, well overpull. These effects may not be immediately apparent.

Well adjustment should be made in as small an increment as possible, preferably an increment of ten percent of the existing flow or less. There may be obvious conditions when this is not appropriate, such as when first opening up a well, or when serious overpull is recognized. Every effort should be made to make adjustment and operation as smooth as possible. Dramatic adjustments, or operating while switching between a high flow mode and a well shutoff mode is to be avoided.

Wellfield Optimization

Every effort should be made to continuously locate and correct or eliminate conditions, (e.g., gas condensate surging and blockage, settlement, etc.), which inhibit efficient operation of the gas collection system. This will allow well monitoring and adjustment to be significantly more effective.

Migration Control—Dealing with Poor Methane Quality

If methane and oxygen quality objectives cannot be maintained at a given well, such as a perimeter migration control well, then an attempt should be made to stabilize the well as closely as is practical, avoiding significant or rapid downtrending of methane or uptrending of oxygen.

It is not uncommon for perimeter migration control wells to be operated at less than 40 percent methane or greater than one percent oxygen. It should be recognized that these wells are likely in a zone where some aerobic action is being induced, and that there is some risk of introducing or enhancing the spread of a subsurface fire. Sometimes a judicious compromise is necessary to achieve critical migration control objectives or because existing conditions do not allow otherwise. Such situations should be monitored closely.

Wellfield Adjustment—Purpose and Objectives

The objective of wellfield adjustment is to achieve steady state operation of the gas collection system by stabilizing the rate and quality of extracted LFG in order to achieve one or several goals. Typical reasons for recovery of LFG and close control of the well field are:

- Achieve and maintain effective subsurface gas migration control.
- Achieve and maintain effective surface gas emissions control.
- Assist with proper operation of control and recovery equipment.
- Avoidance of well overpull and maintenance of a healthy anaerobic state within the landfill.
- Optimize LFG recovery for energy recovery purposes.
- Control nuisance LFG odors.
- Prevent or control subsurface LFG fires.
- Protect structures on and near the landfill.
- Meet environmental and regulatory compliance requirements.

Wellfield adjustment is partly subjective and can be confusing because it involves judgment calls based on simultaneous evaluation of several variables as well a general knowledge of site specific field conditions and historical trends. Wellfield evaluation and adjustment consists of a collection of tools and techniques which may be used in combination to achieve steady state wellfield operation.

© 1993 Landfill Control Technologies, Corporate Headquarters 6055 E. Washington Blvd., Commerce, CA 94110 U.S.A. GEM-500 is a product trademark.

© 1993 Landfill Control Technologies, Corporate Headquarters 6055 E. Washington Blvd., Commerce, CA 94110 U.S.A. GEM-500 is a product trademark.

LANDTEC Technical Tips

Landfill Control Technologies regularly produces technical landfill related information and educational material. Please call LANDTEC to receive the current series of these Technical Tips.

© 1993 Landfill Control Technologies, Corporate Headquarters 6055 E. Washington Blvd., Commerce, CA 94110 U.S.A. GEM-500 is a product trademark.

Chapter 13-Quick Start Screen Tree

Figure 13.1

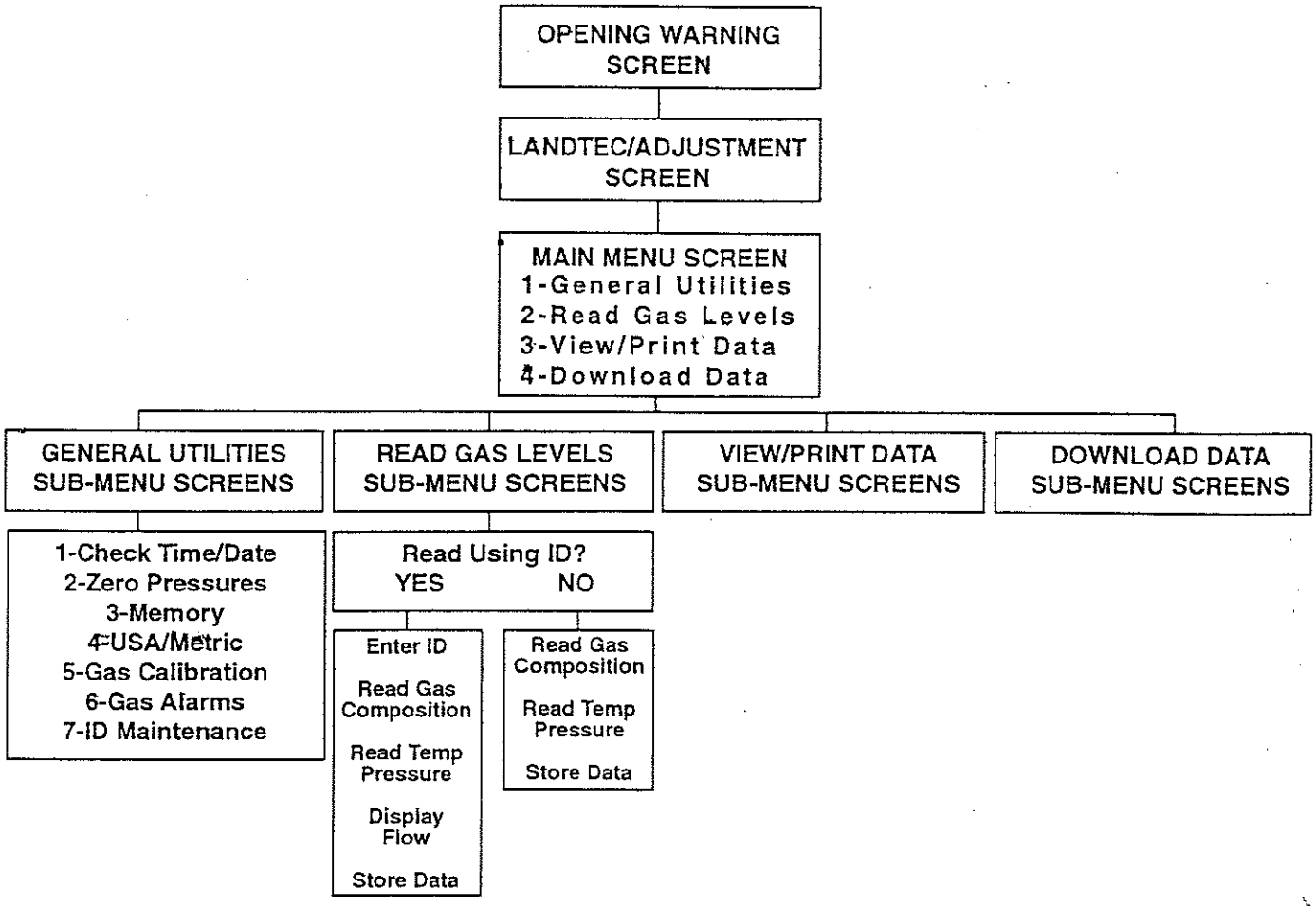

© 1993 Landfill Control Technologies, Corporate Headquarters 6055 E. Washington Blvd., Commerce, CA 94110 U.S.A. GEM-500 is a product trademark.

© 1993 Landfill Control Technologies, Corporate Headquarters 6055 E. Washington Blvd., Commerce, CA 94110 U.S.A. GEM-500 is a product trademark.

Appendix C

Magnehelic® Gage EXPLODED VIEW Series 2000

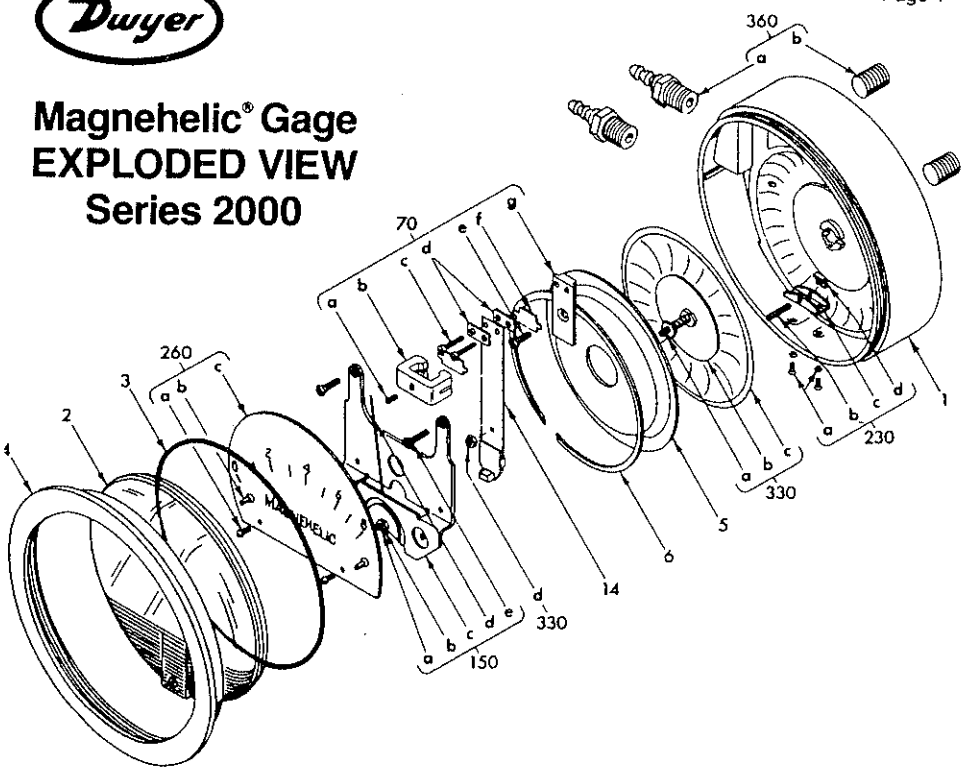

1. Case
2. Cover with zero adjust assy.
3. "O" ring seal
4. Bezel
5. Diaphragm sealing plate
6. Retaining ring
70. Range Spring assembly
   a. Clamp set screw
   b. Clamp
   c. Mounting screws (2 req'd)
   d. Clamping shoe (2 req'd)
   e. Clamp plate screw
   f. Spacer (2 req'd)
   g. Clamp plate
14. Range Spring with magnet
50. Wishbone Assembly – consists of:
   a. Front jewel
   b. Locking nut
   c. Wishbone
   d. Pointer
   e. Mounting screws (2 req'd)
   f. Helix assembly (not shown)
   g. Pivots (2 req'd) (not shown)
   h. Rear jewel (not shown)

230. Zero adjust assembly – consists of:
   a. Foot screws with washers (2 req'd)
   b. Adjust screw
   c. Foot
   d. Finger
260. Scale Assembly – consists of:
   a. Mounting screws (2 req'd)
   b. Bumper pointer stop (2 req'd)
   c. Scale
330. Diaphragm Assembly – consists of:
   (Arbor press needed to install)
   a. Linkage assy., complete
   b. Front plate
   c. Diaphragm
   d. Rear plate (not shown)
   e. Plate washer (not shown)
360. Mounting Hardware Kit
   a. Adapter – pipe plug ⅛" NPT to rubber tubing – (2 req'd)
   b. Pipe plug ⅛" NPT – (2 req'd)
   c. Mounting lug (3 req'd)
   d. Long screw (3 req'd)
   e. Short screw (3 req'd)

Ordering Instructions:

When corresponding with the factory regarding Magnehelic® gage problems, refer to the call-out numbers in this view. Be sure to include model number, pressure range, and any special options. Field repair is not recommended; contact the factory for repair service information.

©Copyright 1992 Dwyer Instruments, Inc.

Litho in U.S.A. 2/92

12-440212-04

OPERATING INSTRUCTIONS and PARTS LIST

Magnehelic® Differential Pressure Gage

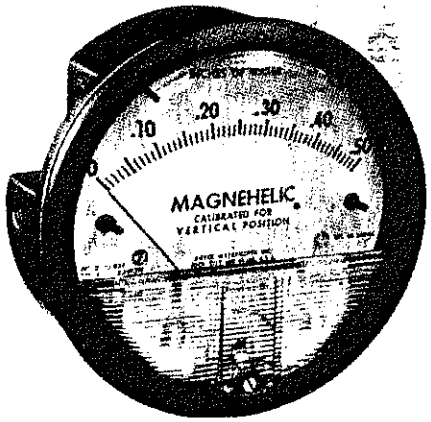

SPECIFICATIONS

Dimensions: 4-3/4" dia. X 2-3/16" deep.

Weight: 1 lb. 2 oz.

Finish: Baked dark gray enamel.

Connections: 1/8 N.P.T. high and low pressure taps, duplicated, one pair side and one pair back.

Accuracy: Plus or minus 2% of full scale, at 70°F. (Model 2000-0, 3%; 2000-00, 4%).

Pressure Rating: 15 PSI.

Ambient Temperature Range: 20° to 140°F.

Standard gage accessories include two 1/8" N.P.T. plugs for duplicate pressure taps, two 1/8" pipe thread to rubber tubing adapters, and three flush mounting adapters with screws.

Caution: For use with air or compatible gases only.

For repeated over-ranging or high cycle rates, contact factory.

Hydrogen Gas Precautionary Note: The rectangular rare earth magnet used in the standard gage may not be suitable for use with hydrogen gas since a toxic and explosive gas may form. For hydrogen service, consult the factory for an alternate gage construction.

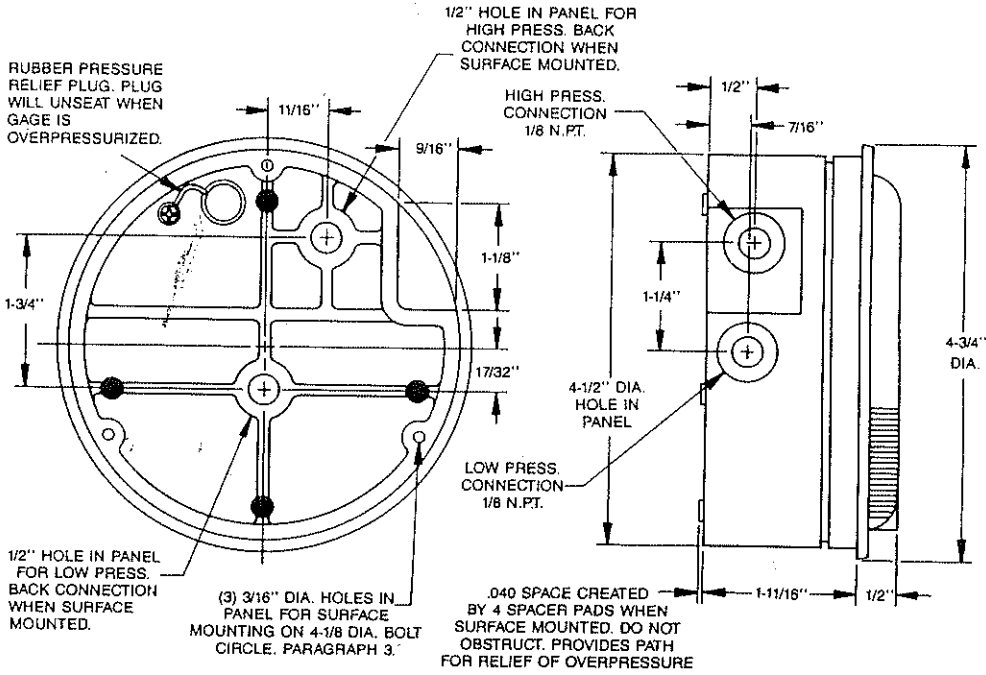

DWYER INSTRUMENTS, INC.
P. O. BOX 373 • MICHIGAN CITY, INDIANA 46360, U.S.A.
Telephone 219/879-8000
Fax 219/872-9057

MAGNEHELIC INSTALLATION

Overpressure Protection: Standard Magnehelic gages are rated for a maximum pressure of 15 PSIG and should not be used where that limit could be exceeded. Newer models employ a rubber plug on the rear which functions as a relief valve by unseating and venting the gage interior when overpressure reaches approximately 25 PSIG. To provide a free path for pressure relief, there are four spacer pads which maintain .040" clearance when gage is surface mounted. Do not obstruct the gap created by these pads.

1. Select a location free from excessive vibration and where the ambient temperature will not exceed 140°F. Also, avoid direct sunlight which accelerates discoloration of the clear plastic cover. Sensing lines may be run any necessary distance. Long tubing lengths will not affect accuracy but will increase response time slightly. Do not restrict lines. If pulsating pressures or vibration cause excessive pointer oscillation, consult the factory for ways to provide additional damping.

2. All standard Magnehelic gages are calibrated with the diaphragm vertical and should be used in that position for maximum accuracy. If gages are to be used in other than vertical position, this should be specified on the order. Many higher range gages will perform within tolerance in other positions with only rezeroing. Low range Model 2000-00 and metric equivalents must be used in the vertical position only.

3. Surface Mounting

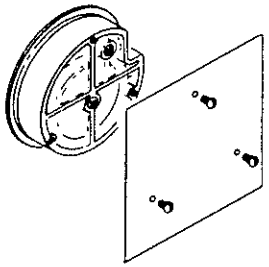

Locate mounting holes, 120° apart on a 4-1/8" dia. circle. Use No. 6-32 machine screws of appropriate length.

4. Flush Mounting

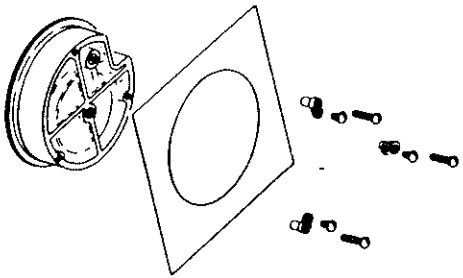

Provide a 4½" dia. opening in panel. Insert gage and secure in place with No. 6-32 machine screws of appropriate length, with adaptors, Part No. 360c, firmly secured in place. To mount gage on 1¼"-2" pipe, order optional A-610 pipe mounting kit.

5. To zero the gage after installation

Set the indicating pointer exactly on the zero mark, using the external zero adjust screw on the cover at the bottom. Note that the zero check or adjustment can only be made with the high and low pressure taps both open to atmosphere.

Operation

Positive Pressure: Connect tubing from source of pressure to either of the two high pressure ports. Plug the port not used. Vent one or both low pressure ports to atmosphere.

Negative Pressure: Connect tubing from source of vacuum or negative pressure to either of the two low pressure ports. Plug the port not used. Vent one or both high pressure ports to atmosphere.

Differential Pressure: Connect tubing from the greater of two pressure sources to either high pressure port and the lower to either low pressure port. Plug both unused ports.

When one side of gage is vented in a dirty, dusty atmosphere, we suggest an A-331 Filter Vent Plug be installed in the open port to keep inside of gage clean.

a. For portable use or temporary installation, use 1/8" pipe thread to rubber tubing adapter and connect to source of pressure with rubber or Tygon tubing.

b. For permanent installation, 1/4" O.D., or larger, copper or aluminum tubing is recommended. See accessory bulletin S-101 for fittings.

MAINTENANCE

Maintenance: No lubrication or periodic servicing is required. Keep case exterior and cover clean. Occasionally disconnect pressure lines to vent both sides of gage to atmosphere and re-zero. Optional vent valves, (bulletin S-101), should be used in permanent installations.

Calibration Check: Select a second gage or manometer of known accuracy and in an appropriate range. Using short lengths of rubber or vinyl tubing, connect the high pressure side of the Magnehelic gage and the test gage to two legs of a tee. Very slowly apply pressure through the third leg. Allow a few seconds for pressure to equalize, fluid to drain, etc., and compare readings. If accuracy unacceptable, gage may be returned to factory for recalibration. To calibrate in the field, use the following procedure.

Calibration:

1. With gage case, P/N 1, held firmly, loosen bezel, P/N 4 by turning counterclockwise. To avoid damage, a canvas strap wrench or similar tool should be used.
2. Lift out plastic cover and "O" ring.
3. Remove scale screws and scale assembly. Be careful not to damage pointer.
4. The calibration is changed by moving the clamp, P/N. 70-b. Loosen the clamp screw(s) and move slightly toward the helix if gage is reading high, and away if reading low. Tighten clamp screw and install scale assembly.
5. Place cover and 0-ring in position. Make sure the hex shaft on inside of cover is properly engaged in zero adjust screw, P/N 230-b.
6. Secure cover in place by screwing bezel down snug. Note that the area under the cover is pressurized in operation and therefore gage will leak if not properly tightened.
7. Zero gage and compare to test instrument. Make further adjustments as necessary.

Caution: If bezel binds when installing, lubricate threads sparingly with light oil or molybdenum disulphide compound.

Warning: Attempted field repair may void your warranty. Recalibration or repair by the user is not recommended. For best results, return gage to the factory. Ship prepaid to:

Dwyer Instruments, Inc.
Attn. Repair Dept.
55 Ward St.
Wakarusa, IN 46573

Trouble Shooting Tips:

• *Gage won't indicate or is sluggish.*

1. Duplicate pressure port not plugged.
2. Diaphragm ruptured due to overpressure.
3. Fittings or sensing lines blocked, pinched, or leaking.
4. Cover loose or "O" ring damaged, missing.
5. Pressure sensors, (static tips, Pitot tube, etc.) improperly located.
6. Ambient temperature too low. For operation below 20°F, order gage with low temperature, (LT) option.

• *Pointer stuck-gage can't be zeroed.*

1. Scale touching pointer.
2. Spring/magnet assembly shifted and touching helix.
3. Metallic particles clinging to magnet and interfering with helix movement.
4. Cover zero adjust shaft broken or not properly engaged in P/N 230-b adjusting screw.

We generally recommend that gages needing repair be returned to the factory. Parts used in various sub-assemblies vary from one range of gage to another, and use of incorrect components may cause improper operation or failure. Gages repaired at the factory are carefully calibrated and tested to assure "like-new" operation. After receipt and inspection, we will be happy to quote repair costs before proceeding.

Consult factory for assistance on unusual applications or conditions.

Use with air or compatible gases only.

DWYER INSTRUMENTS, INC.
P. O. BOX 373 • MICHIGAN CITY, INDIANA 46360, U.S.A.
Telephone 219/879-8000
Fax 219/872-9057

CPC

Thermoplastic Coupling Inserts

FERRULESS PLASTIC TUBE FITTING

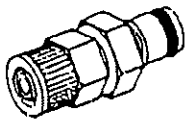

		ACETAL				POLYPROPYLENE			
	FLOW	1/8" FLOW PART NUMBER	PRICE	1/4" FLOW PART NUMBER	PRICE	1/8" FLOW PART NUMBER	PRICE	1/4" FLOW PART NUMBER	PRICE
5/32" Tube OD	St. Thru	PMC 20-025	2.03						
5/32" Tube OD	Shutoff	PMCD 20-025	3.98						
1/4" Tube OD	St. Thru	PMC 20-04	1.97	PLC 200-04	2.40	PMC 20-04-12	2.50		
1/4" Tube OD	Shutoff	PMCD 20-04	3.86	PLCD 200-04	5.15	PMCD 20-04-12	5.26		
3/8" Tube OD	St. Thru	PMC 20-06	2.54	PLC 200-06	2.40			PLC 200-06-12	3.19
3/8" Tube OD	Shutoff	PMCD 20-06	4.80	PLCD 200-06	5.15			PLCD 200-06-12	6.96

ELBOW FERRULESS PLASTIC TUBE FITTING

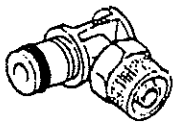

5/32" Tube ID	St. Thru	PMC 21-025	4.15						
1/4" Tube OD	St. Thru	PMC 21-04	4.15						
1/4" Tube OD	Shutoff	PMCD 21-04	5.84			PMCD 21-04-12	7.90		
3/8" Tube OD	St. Thru			PLC 210-06	4.15			PLC 210-06-12	5.23
3/8" Tube OD	Shutoff			PLCD 210-06	5.95			PLCD 210-06-12	7.90

HOSE BARB

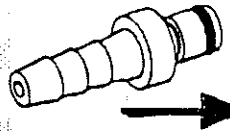

1/16" Tube ID	St. Thru	PMC 22-01	1.17			PMC 22-01-12	2.17		
1/16" Tube ID	Shutoff	PMCD 22-01	4.45			PMCD 22-01-12	5.92		
1/8" Tube ID	St. Thru	PMC 22-02	0.95			PMC 22-02-12	1.43		
1/8" Tube ID	Shutoff	PMCD 22-02	3.98			PMCD 22-02-12	5.17		
3/16" Tube ID	St. Thru	PMC 22-03	0.95						
3/16" Tube ID	Shutoff	PMCD 22-03	3.98						
1/4" Tube ID	St. Thru	PMC 22-04	0.95	PLC 220-04	0.95	PMC 22-04-12	1.43	PLC 220-04-12	1.43
1/4" Tube ID	Shutoff	PMCD 22-04	3.98	PLCD 220-04	4.43	PMCD 22-04-12	5.17	PLCD 220-04-12	5.63
5/16" Tube ID	St. Thru			PLC 220-05	0.95				
5/16" Tube ID	Shutoff			PLCD 220-05	4.43				
3/8" Tube ID	St. Thru			PLC 220-06	0.95			PLC 220-06-12	1.43
3/8" Tube ID	Shutoff			PLCD 220-06	4.43			PLCD 220-06-12	5.71

ELBOW HOSE BARB

1/8" Tube ID	St. Thru	PMC 23-02	3.47			PMC 23-02-12	4.39		
1/8" Tube ID	Shutoff	PMCD 23-02	5.58			PMCD 23-02-12	6.81		
1/4" Tube ID	St. Thru	PMC 23-04	3.47	PLC 230-04	3.47	PMC 23-04-12	4.39	PLC 230-04-12	4.48
1/4" Tube ID	Shutoff	PMCD 23-04	5.58	PLCD 230-04	5.58	PMCD 23-04-12	6.81	PLCD 230-04-12	6.49
3/8" Tube ID	St. Thru			PLC 230-06	3.47			PLC 230-06-12	4.48
3/8" Tube ID	Shutoff			PLCD 230-06	5.58			PLCD 230-06-12	6.81

PIPE THREAD

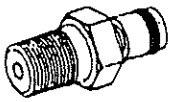

1/8" MNPT	St. Thru	PMC 24-02	1.37			PMC 24-02-12	2.20		
1/8" MNPT	Shutoff	PMCD 24-02	4.19			PMCD 24-02-12	5.09		
1/4" MNPT	St. Thru	PMC 24-04	1.37	PLC 240-04	1.43			PLC 240-04-12	3.63
1/4" MNPT	Shutoff	PMCD 24-04	4.24	PLCD 240-04	4.49			PLCD 240-04-12	6.11
3/8" MNPT	St. Thru			PLC 240-06	1.43				
3/8" MNPT	Shutoff			PLCD 240-06	4.49				

10-32 FEMALE THREAD

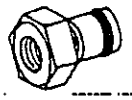

10-32 UNF	St. Thru	PMC 28-1032	2.34
10-32 UNF	Shutoff	PMCD 28-1032	5.04

PANEL MOUNT FERRULESS PLASTIC TUBE FITTING

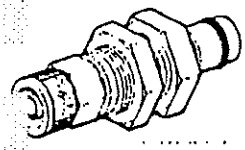

1/4" Tube OD	St. Thru	PMC 40-04	4.39	PLC 400-04	4.42
1/4" Tube OD	Shutoff	PMCD 40-04	6.96	PLCD 400-04	6.92
3/8" Tube OD	St. Thru			PLC 400-06	4.42
3/8" Tube OD	Shutoff			PLCD 400-06	6.92

PANEL MOUNT HOSE BARB

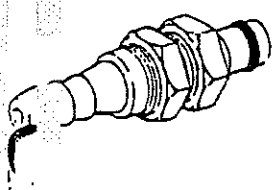

1/16" Tube ID	St. Thru	PMC 42-01	3.86				
1/16" Tube ID	Shutoff	PMCD 42-01	6.39				
1/8" Tube ID	St. Thru	PMC 42-02	3.17				
1/8" Tube ID	Shutoff	PMCD 42-02	5.58				
3/16" Tube ID	St. Thru	PMC 42-03	3.11				
3/16" Tube ID	Shutoff	PMCD 42-03	5.85				
1/4" Tube ID	St. Thru	PMC 42-04	3.25	PLC 420-04	3.37		PLC 420-04-12 4.86
1/4" Tube ID	Shutoff	PMCD 42-04	5.69	PLCD 420-04	5.87		PLCD 420-04-12 6.15
5/16" Tube ID	St. Thru			PLC 420-05	3.52		
5/16" Tube ID	Shutoff			PLCD 420-05	6.15		
3/8" Tube ID	St. Thru			PLC 420-06	3.37		PLC 420-06-12 4.86
3/8" Tube ID	Shutoff			PLCD 420-06	6.15		PLCD 420-06-12 7.43

PLC Series Coupling Bodies & Inserts with Softube Fitting ends for 1/4" & 3/8" tubing – see page 18.

Thermoplastic Coupling Bodies

MALE PIPE THREAD

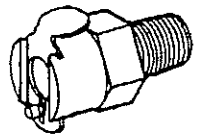

	FLOW	ACETAL 1/8" FLOW PART NUMBER	PRICE	ACETAL 1/4" FLOW PART NUMBER	PRICE	POLYPROPYLENE 1/8" FLOW PART NUMBER	PRICE	POLYPROPYLENE 1/4" FLOW PART NUMBER	PRICE
1/8" MNPT	St. Thru	PMC 10-02	3.14			PMCD10-02-12	4.81		
1/8" MNPT	Shutoff	PMCD 10-02	4.03						
1/4" MNPT	St. Thru	PMC 10-04	3.14	PLC 100-04	3.93				
1/4" MNPT	Shutoff	PMCD 10-04	4.03	PLCD 100-04	4.40	PMCD 10-04-12	5.08	PLCD 100-04-12	5.39
3/8" MNPT	St.Thru			PLC 100-06	3.93				
3/8" MNPT	Shutoff			PLCD 100-06	4.40			PLCD 100-06-12	7.29

PANEL MOUNT FERRULESS PLASTIC TUBE FITTING

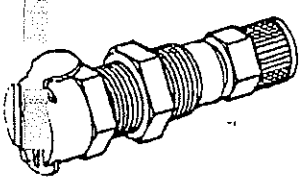

5/32" Tube OD	St. Thru	PMC 12-025	5.52						
5/32"Tube OD	Shutoff	PMCD 12-025	6.16						
1/4" Tube OD	St. Thru	PMC 12-04	5.26	PLC 120-04	8.01				
1/4" Tube OD	Shutoff	PMCD 12-04	5.88	PLCD 120-04	8.82	PMCD 12-04-12	7.43		
3/8" Tube OD	St. Thru			PLC 120-06	8.01				
3/8" Tube OD	Shutoff			PLCD 120-06	8.82			PLCD 120-06-12	10.61

IN LINE FERRULESS PLASTIC TUBE FITTING

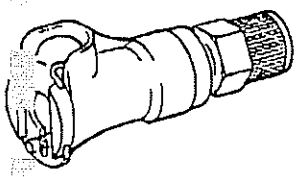

5/32" Tube OD	St. Thru	PMC 13-025	5.06						
5/32" Tube OD	Shutoff	PMCD 13-025	5.81						
1/4" Tube OD	St. Thru	PMC 13-04	3.72	PLC 130-04	5.91				
1/4" Tube OD	Shutoff	PMCD 13-04	4.33	PLCD 130-04	6.44	PMCD 13-04-12	7.01		
3/8" Tube OD	St. Thru			PLC 130-06	6.03				
3/8" Tube OD	Shutoff			PLCD 130-06	6.62			PLCD 130-06-12	9.87

PANEL MOUNT HOSE BARB

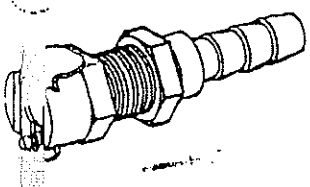

1/16" Tube ID	St. Thru	PMC 16-01	5.40						
1/16" Tube ID	Shutoff	PMCD 16-01	6.22			PMCD 16-01-12	7.35		
1/8" Tube ID	St. Thru	PMC 16-02	5.01						
1/8" Tube ID	Shutoff	PMCD 16-02	5.68			PMCD 16-02-12	6.60		
3/16" Tube ID	St. Thru	PMC 16-03	5.01						
3/16" Tube ID	Shutoff	PMCD 16-03	5.79						
1/4" Tube ID	St. Thru	PMC 16-04	5.11	PLC 160-04	7.61				
1/4" Tube ID	Shutoff	PMCD 16-04	5.79	PLCD 160-04	8.54	PMCD 16-04-12	6.99	PLCD 160-04-12	9.66
5/16" Tube ID	St. Thru			PLC 160-05	7.97				
5/16" Tube ID	Shutoff			PLCD 160-05	8.95				
3/8" Tube ID	St. Thru			PLC 160-06	7.61				
3/8" Tube ID	Shutoff			PLCD 160-06	8.54			PLCD 160-06-12	9.68

IN LINE HOSE BARB

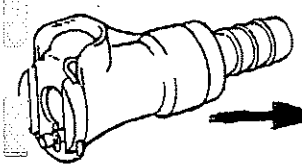

1/16" Tube ID	St. Thru	PMC 17-01	3.30						
1/16" Tube ID	Shutoff	PMCD 17-01	4.46			PMCD 17-01-12	7.11		
1/8" Tube ID	St. Thru	PMC 17-02	2.87						
1/8" Tube ID	Shutoff	PMCD 17-02	4.10			PMCD 17-02-12	6.39		
3/16" Tube ID	St. Thru	PMC 17-03	2.94						
3/16" Tube ID	Shutoff	PMCD 17-03	4.17						
1/4" Tube ID	St. Thru	PMC 17-04	2.87	PLC 170-04	3.69				
1/4" Tube ID	Shutoff	PMCD 17-04	4.10	PLCD 170-04	4.51	PMCD 17-04-12	6.67	PLCD 170-04-12	6.94
5/16" Tube ID	St. Thru			PLC 170-05	3.69				
5/16" Tube ID	Shutoff			PLCD 170-05	4.51				
3/8" Tube ID	St. Thru			PLC 170-06	3.69				
3/8" Tube ID	Shutoff			PLCD 170-06	4.51			PLCD 170-06-12	7.20

PANEL MOUNT 10-32 FEMALE THREAD

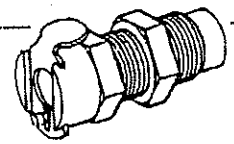

10-32 UNF	St. Thru	PMC 18-1032	6.68
10-32 UNF	Shutoff	PMCD 18-1032	7.61

IN LINE 10-32 FEMALE THREAD

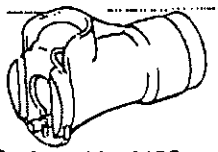

10-32 UNF	St. Thru	PMC 19-1032	4.50
10-32 UNF	Shutoff	PMCD 19-1032	5.30

PLC Series Coupling Bodies & Inserts with Softube F[illegible] ends for 1/4" & 3/8" tubl[illegible] – see page 18.

CPC. Colder Products Company
[illegible] St. Paul, MN 55114 • Call 1-800-444-2474

Appendix D

PRODUCT SPECIFICATIONS

LANDTEC®
LANDFILL CONTROL TECHNOLOGIES

Accu-Flo™

Series: 150, 200, 300

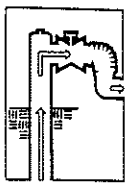

WELLHEAD
Landfill Gas Control
Patent #5,458,006

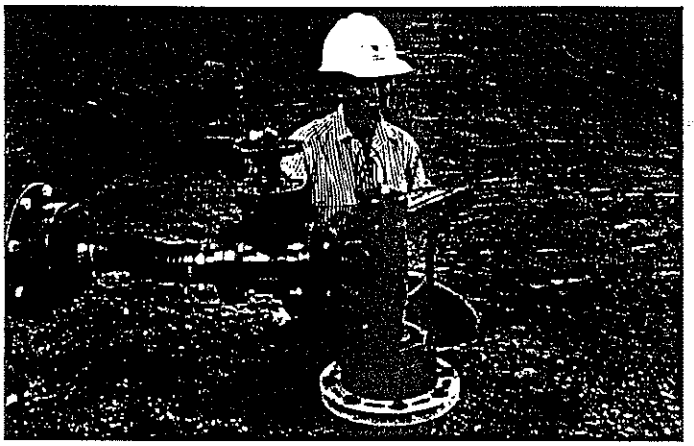

Accu-Flo™ Description

The patented Accu-Flo™ series wellhead is a prefabricated gas flow control system developed specifically for installation on landfill gas (LFG) management systems. The assembly incorporates a built-in gas flow meter, gas temperature guage, quick-connect gas sample and pressure ports, and flow control gate valve. Models are available for installation above or below ground, on vertical wells or horizontal branch laterals, and for flow rates ranging from one to over 500 cfm (cubic feet per minute). Adapter kits are available for installing Accu-Flo™ wellheads on a multitude of gas well casings or laterals.

Landfill Gas Flow Measurements at Wellheads

Step A – The following measurements should be taken directly at the wellhead using appropriate instrumentation.

- Static Pressure – measure s.p. range, 0-100" W.C., 0.1 resolution.
- Differential Pressure – measure d.p. range, 0-10" W.C., 0.01 resolution.
- Gas Temperature – read built-in thermometer, degrees Fahrenheit, 2.0 resolution.
- Gas Composition – use any port to extract a gas sample of analysis.

Step B – Calculate gas flow volume (SCFM) using one of the following methods:

- Use LANDTEC Chart: Velocity Pressure vs. Flow provided with each wellhead.
- Use LANDTEC GEM-500 (Gas Extraction Monitor) for automatic gas sampling, pressure measurements, analysis, and flow calculations.
- Use LANDTEC's propriotory equations

Accu-Flo™ Maintenance

Accu-Flo™ wellheads are designed to provide maintenance free operation. The quick-connect ports are threaded for easy inspection or replacement. The union disconnect allow convenient removal of the Accu-Flo™ assembly for periodic inspection. The built-in impact tube is mounted to a standard PVC plug for easy removal. Removal of the plug also allows operators to "sound" a gas well to determine the approximate liquid depth within the well casing.

Primary Accu-Flo™ Features and Components

Gas Flow Meter: (Gas Measurement Tube assembly) incorporates a prepositioned, impact tube within a precalibrated (lab certified) measurement tube assembly (Accu-Flo™ body). Assembly can extend into the well casing to provide installation compactness.

Flow Control Gate Valve: Designed for full flow with minimal pressure drop or throttled flow, non-rising stem, positive shut-off gas flow, PVC materials, and a polypropylene wedge.

Impact Tube: Pre-positioned within the gas measurement tube assembly. Mounted to a threaded PVC plug. Stainless steel construction. Design incorporates an enlarged pressure port and a separate static pressure port to protect the tube from particulate and condensate clogging common with conventional Pitot designs used in LFG applications.

Gas Pressure Ports and Sample Port: Provide quick-connect convenience when taking gas samples and impact tube static/differential pressure readings required for calculating gas flow rates. Constructed of polypropylene with Viton seals for positive sealing. Threaded fittings are easily removed for inspection or replacement.

Temperature Gauge: Indicates gas flow temperature on a scale ranging from 0° to 220°F with ±2°F accuracy. Stainless steel probe, plastic water tight dial cover and a recalibration nut. Easily removed from quick-connect fitting for inspection, or other use of fitting.

Flex hose: A 5' long flexible "PVC spa hose" is provided. with all Accu-Flo™ models to connect the outlet of the Accu-Flo™ wellhead to an existing LFG laterial or header.

Dust Cover: Protects sample ports and temperature gauge from the sun and landfill elements.

Accu-Flo™ Compatible Instrumentation and LANDTEC Products

Landfill Control Technologies (LANDTEC) distributes or manufactures the following products that can be used with Accu-Flo™ wellheads:

- ***LANDTEC* GEM-500 (Gas Extraction Monitor)** – incorporates nine landfill gas instruments with on-board computer. Data can be downloaded to PC.
- ***LANDTEC* WBS-100™ (Well Bore Seal)** – dense PVC sheeting provides durable, impermeable membrane seal around well casing to prevent well-bore air intrusion and LFG emissions.

©1992-1996 Landfill Control Technologies. Corporate Headquarters 633 West Fifth Street, Suite 4900, Los Angeles, California 90071-2006 U.S.A.
Phone (213) 895-5353, (800) 821-0496, Fax (213) 895-5866

TABLE 1
Accu-Flo™ Model Specifications

Style	Model No.	Recommended Flow Range C.F.M.	Pressure Drop Flow Range Inches of H_2O	Dimensions A x B	Actual Weight (lbs.)	Shipping Weight (lbs.)
1.5" Vertical	150V	1 Thru 50	0.1 Thru 1.5	16" x 54"	9.6	10.0
1.5" Horizontal	150H	1 Thru 50	0.1 Thru 2.1	10" x 61"	12.3	13.0
2" Vertical	200V	5 Thru 75	0.1 Thru 3.2	16" x 55"	11.6	12.0
2" Horizontal	200H	5 Thru 75	0.1 Thru 3.5	10" x 61"	12.5	13.0
3" Vertical	300V	10 Thru 500	0.1 Thru 11.5 +	23" x 62"	37.5	38.0*
3" Horizontal	300H	10 Thru 500	0.1 Thru 19.0 +	13" x 71"	46.4	47.0*

V = Vertical H = Horizontal *Includes 3" valves shipped separately, weight 22 lbs.
To order basic wellhead without flow measurement element add "NF" to model number.

Vertical – Accu-Flo well casing configuration

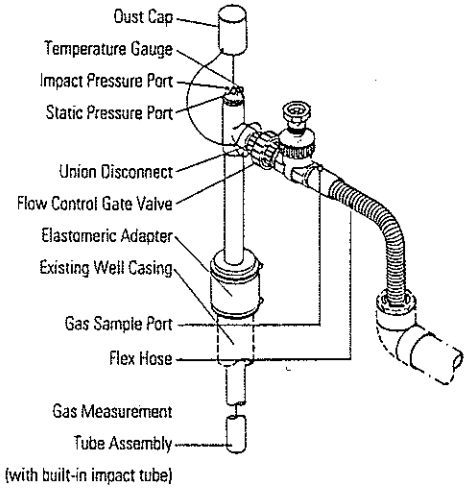

Horizontal – Accu-Flo lateral

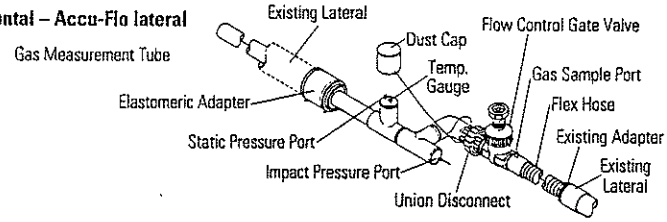

Accu-Flo™ Wellhead Shipment and Installation

Shipment: Accu-Flo™ wellheads are shipped as a complete assembly, plus separate flex hose (glued fitting).

Installation: Accu-Flo™ wellheads (vertical and horizontal) are installed on top of or extend into 2" through 8" well casing or laterals. Accu-Flo™ wellheads are typically installed on a well casing or branch lateral by using appropriate reducer bushings, couplings, flanges, gaskets and bolts (as required and provided by others) – or by using LANDTEC Installation Adapter Kits.
No special tools are required. Assembly and installation of an Accu-Flo™ wellhead typically takes less than an hour.

Vault Installation: All Accu-Flo™ models can be installed below ground in a vault. Because the patented Accu-Flo™ body can extend into a well casing, installation for models 150 and 200 wellheads can be in vaults as small as 18" x 24" x 16" deep.

Warranty

LANDTEC products are backed by a clear and unconditional warranty. It guarantees that for twelve months after delivery, the product will operate properly and meet design specifications, or we will repair or resolve the problem to the customer's satisfaction, otherwise we will provide a complete refund of the purchase price. Our warranty reflects our commitment to our products and customers.

Accu-Flo™ Product Selection/Order Instructions

To select the proper Accu-Flo™ models and Adapter Kits for a gas collection system, determine:
1) Model Style: Select the "installation style" required for each model, either: **(V) vertical style or (H) horizontal style.**
2) Model Size: Select the "model size" required for each wellhead to meet the design flow and pressure drop requirements by using Table 1 – Accu-Flo™ Model Specifications. Full range pressure drop charts are available upon request for each model:
Model no's. 150V, 150H, 200V, 200H, 300V, 300H.
3) Optional Adapter Kits: To order Adapter Kit, specify well casing size and type (either slip or flange).

Elastomeric Adapter Kit contains: Elastomeric Coupling, Concentric Bushing and Stainless Steel Clamps.

Flange Kit contains: Elastomeric Adapter Kit, Van Stone Flange, Neoprene Gasket and Bolt Kit.

Please call our toll-free number (800) LANDTEC and ask for a Sales Engineer to assist you.

LANDTEC Products, Support Services and Spare Parts

LANDTEC provides full technical support for our products. A spare parts list is provided with each product. Additional information can be obtained on products including: product short and long form CSI specifications, installation instructions and CAD drawings. LANDTEC products are designed to work together in an integrated landfill gas management program with other products which include: wellheads, well-bore seals, knockouts, pump stations, flares, condensate/leachate treatment, field instruments and landfill gas management software.

For additional information or placement on our mailing list, please call our toll free West Coast number (800) 821-0496 (8 a.m. - 5 p.m. PST) and ask for a sales engineer to discuss your landfill needs.

LANDTEC®
LANDFILL CONTROL TECHNOLOGIES
(800) LANDTEC

Northwest Sales Office
(213) 895-5621, (213) 895-5866 FAX
Southwest Sales Office
(213) 895-5625, (213) 895-5866 FAX
Northeast Sales Office
(703) 425-9894, (703) 425-6026 FAX
Southeast Sales Office
(404) 869-0102, (404) 869-0103 FAX

Printed on Recycled Paper
Product designs and specifications are subject to change without notice. User is responsible for determining suitability of product.
LANDTEC is registered with the U.S. Patent and Trademark Office. Accu-Flo is a product trademark.

INSTALLATION NOTES

ER TO LANDTEC ACCU-FLO® WELLHEAD INSTALLATION INSTRUCTION
UAL AND PROJECT BID SPECIFICATIONS. READ INSTRUCTIONS
ROUGHLY BEFORE ATTEMPTING ASSEMBLY AND INSTALLATION OF
LHEAD ON WELL CASING.
LHEAD CASING HEIGHT TO BE DETERMINED BASED ON FIELD
DITIONS AND THE ENGINEER'S DIRECTION.
LHEAD AND FLOW MEASUREMENT TUBE ASSEMBLY SHALL BE
PATIBLE WITH LANDTEC GEM-500 LANDFILL GAS INSTRUMENTATION
DATABASE MANAGEMENT SYSTEM.
LHEAD SHALL BE SUPPLIED WITH LABORATORY CERTIFIED FLOW
IBRATION PERFORMANCE CURVES.
DFILL CONTROL TECHNOLOGIES (LANDTEC) ACCU-FLO® WELLHEAD
EMBLY & ACCESSORIES: GEM-500, DATABASE MANAGEMENT SOFTWARE,
WELLBORE SEAL AVAILABLE FROM LANDTEC. PHONE: 1-213-722-8202
LHEAD SHALL BE RATED FOR A FLOW RANGE OF _____
ERAL PIPING MAY BE SUPPORTED BY GROUND SURFACE, BERMED
TH, OR PIPING SUPPORTS AS SPECIFIED IN THESE PLANS AT
'ING SUPPORT DETAILS' AND AS DETERMINED BY THE ENGINEER.
ER TO 'PIPING SUPPORT DETAILS' SHEET_____ AND PIPING
OUT PLANS SHEET_____ FOR PIPING SUPPORT REQUIREMENTS.
ER TO SHEET _____ FOR WELL BORE SEAL INSTALLATION
AILS. INSTALL WELLBORE SEAL BEFORE WELLHEAD ASSEMBLY.
FLEXIBLE CONNECTIONS USE ONLY 'IPS WELD-ON 795'
STIC PIPE CEMENT OR EQUAL FOR FLEXIBLE HOSE TO PIPE
NECTIONS. USE OF OTHER UNAPPROVED CEMENTS MAY RESULT
'REMATURE JOINT FAILURE.
WING SHOWS TYPICAL CONNECTION TO 90° ELL. ACTUAL
NECTION MAY BE TO A TEE, OR COUPLING. REFER TO
ERAL PIPING DETAIL AND PIPING LAYOUT PLAN SHEET _____
INSTRUCTIONS FOR INDIVIDUAL CONNECTIONS.
NING: DO NOT CUT THE FLOW MEASUREMENT TUBE ASSEMBLY.
URE TO HEED THIS WARNING WILL RESULT IN A DAMAGED OR
'ERATIVE WELLHEAD AND VOID THE WARRANTY.
W SUFFICIENT SLACK IN FLEX. HOSE FOR PIPING EXPANSION
CONTRACTION. AN EXTRA 6" TO 8" IS RECOMMENDED.

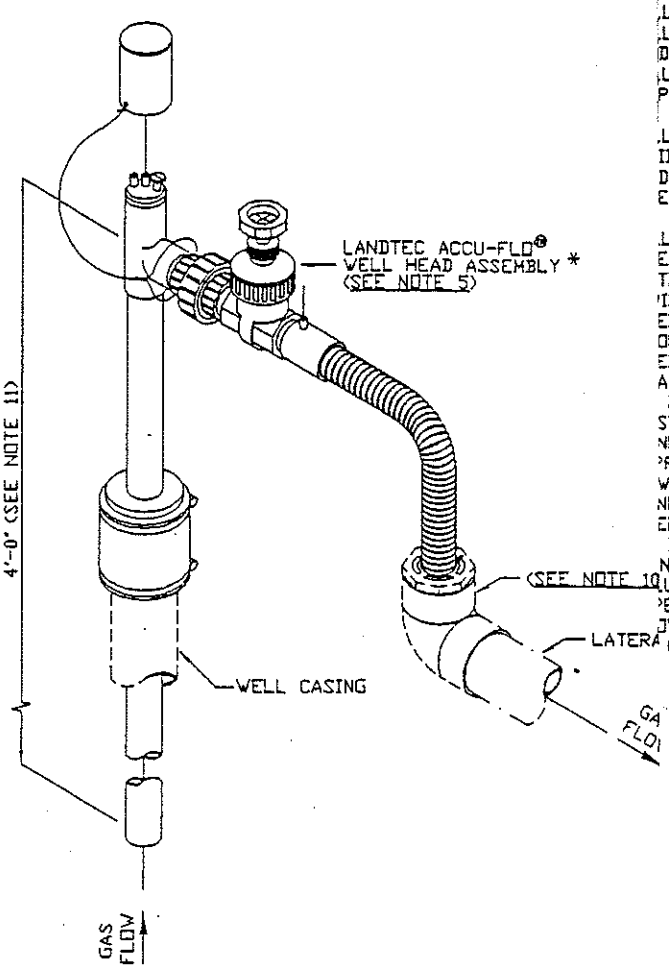

ADAPTER KIT TABLE	
CASING SIZE	LANDTEC PART NUMBER
3"	AKT-EP-020-030S
4"	AKT-EP-020-040S
6"	AKT-EP-020-060S
8"	AKT-EP-020-080S

ISOMETRIC

FINISHED 2" VERTICAL ACCU-FLO® WELLHE
INSTALLATION DETAIL

LANDTEC LAN
ACCU-

2" VERTICAL WELLHEAD ASSEMBLY
ELL CASING & LATERAL PIPING
MPONENTS INCLUDED IN WELLHEAD ASSEMBLY

This notice must be placed on all drawings.
Accu-Flo® is a registered trademark of Landfill Control Technologies (LANDTEC)
Accu-Flo® wellheads are patent pending.

© 1992, Landfill Control Technologies (LANDTEC)

Phone: 1-800-LANDTEC or 1-909-783-3636
937 South Via Lata, Suite 650
Colton, CA 92324

NOTIC
This docu
Technolog
applicatio
informati
verified t
the produ
others. I
CONTRACT
WARRANTY
PURPOSE
SPECIAL,
DAMAGES

	TITLE	ACCU-FLO® PVC WELLHEAD			
		LANDTEC LANDFILL GAS WELLHEAD INSTALLATION ACCU-FLO® 2" VERTICAL WELLHEAD ON TO 3",4", 6" & 8" WELL CASING			
	DRAWN: T.HU	CHECK: E.C.	APPR: E.C.	DATE: 6-6-95	FILENAME: A2V2INST
6-22-95	SCALE: NONE	DWG. NO: D-WHINST-AF2V-PV-020-2-G		SHT: 1 OF 1	REV: 0
DATE					

Accu-Flo Wellhead Installation and Operation Manual

Accu-Flo Wellhead
Table of Contents

Guarantee 2

Owner Registration 2

Additional Information and Technical Assistance 2

INTRODUCTION 3

Accu-Flo Shipment 3

Other LANDTEC/Accu-Flo products 3

ACCU-FLO™ WELLHEAD INFORMATION 3

Accu-Flo Adapter Kit Parts necessary for installation 4

Before You Begin 4

PROCEDURE FOR INSTALLING ACCU-FLO WELLHEADS 6

Overall Summary 6

Beginning the Installation 7

Step 1A. Installing the Accu-FloTM Wellhead to a Vertical Well Casing 7

PVC Vertical Well Casing 7

PE Vertical Well Casing 7

Installing the Measurement Tube Assembly onto the Vertical Well Casing 8

Step 1B. Installing the Accu-FloTM Wellhead on a Horizontal Pipe 10

PVC Horizontal Pipe 10

PE Horizontal Pipe 11

Installing the Measurement Tube Assembly into the Horizontal Pipe 11

Step 2. Attach The Flex Hose To The Gate Valve Assembly 12

Step 2A: Cementing The 2 Inch Pvc Flex Hose To Valve Assembly 12

Step 2B: Fastening The 3 Inch Composition Rubber Flex Hose To Valve Assembly 12

Step 3. Install The flex hose to the header or lateral. 13

Step 3A: Cement The 2 Inch Pvc Flex Hose To The Header Or Lateral 13

Step 3B: Attach The 3 Inch Composition Rubber Flex Hose To The Header Or Lateral 14

FIELD OPERATIONS 16

Methods of LFG Control 16

Well Field Adjustment - Purpose and Objectives 16

Taking Measurements at the Accu-Flo Wellhead 16

Using the GEM-500™ to Gather Data 17

Reading the Accu-Flo Wellhead - Using Standard Field Instruments 17

Determining the Gas Flow Rate 18

Setting Gas Flow Rates 18

LANDFILL CONTROL TECHNOLOGIES

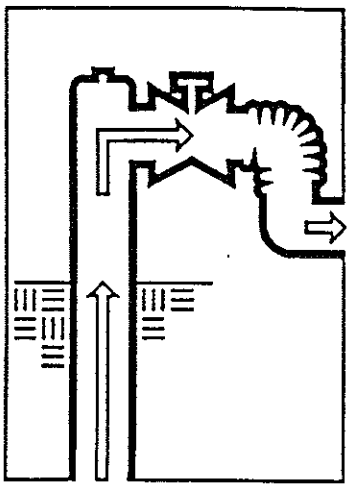

Accu-Flo™ Wellhead Guarantee

Landfill Control Technologies Guarantees Your Satisfaction. We guarantee that all LANDTEC Accu-Flo™ Wellheads will work in the appropriate landfill application for twelve months after installation or fifteen months after shipment (which ever comes first). If you, the registered owner during this period, are not fully satisfied, LANDTEC will repair, replace or refund the purchase price of the Accu-Flo™ Wellheads you return to us. Any warrantee of merchantability or fitness for purpose is specifically disclaimed and any claim based on warranty or otherwise, either expressed or implied, is limited to a purchase price refund.

Owner Registration

The final landfill owner, or operator should register the wellheads with LANDTEC. Because LANDTEC products are often purchased by a contractor or subcontractor, LANDTEC does not always know the ultimate owner. Please phone LANDTEC at (800) 821-0496 and ask for a sales engineer to register these products for the guarantee and to receive additional product support.

Additional Information and Technical Assistance

We are here to help and assist you in installing, using and repairing your Accu-Flo™ Wellheads. Please phone us at (800) 821-0496 any business day (8 a.m. to 5 p.m. Pacific time) with your landfill gas management questions or problems

Copyright 1992 Landfill Control Technologies, 6055 E. Washington Blvd. Commerce, CA 90040, (213)722-8202. Accu-Flo is a product trademark. Patent pending.

comprising the LFG extraction system. Before beginning installation, read through this entire section.

To insure a successful installation, keep in mind the following points:

Additional parts and supplies are necessary to properly install the Accu-Flo™ wellhead. Make sure you have the necessary supplies, parts, tools and equipment before installing. LANDTEC can supply adapter kits (see table below), or the components are available from other vendors. The standard configurations for Accu-Flo™ wellheads are:

- Model 150 wellheads are supplied with a 3" x 1-1/2" specially milled adapter bushing as a part of the wellhead. Standard installation would be on a 3" diameter pipe and coupling. All other configurations require adapter bushings.
- Model 200 wellheads are supplied with a 4" x 2" specially milled adapter bushing as a part of the wellhead. Standard installation would be on a 4" diameter pipe and coupling. All other configurations require adapter bushings.
- Model 300 wellheads are supplied with a 4" x 3" special milled adapter bushing as a part of the wellhead. Standard installation would be on a 4" diameter pipe and coupling. All other configurations require adapter bushings.

Accu-Flo Adapter Kit Parts Necessary For Installation

Adapter Kits for PVC well casing/pipe - Slip/Socket vertical or horizontal installation:

Accu-Flo Model	Wellhead/Lateral Pipe Configuration	Adapter Bushing Required	LANDTEC ADAPTER Part Number
150V	1.5" WH to 2" PVC Slip Casing	Special Order 2"x 1.5" reducer bushing; 2" slip coupling	WH 150V202
150V 150H	1.5" WH to 3" PVC Slip Casing	None Req. STANDARD 3" slip coupling	WH150V203 WH150H203
150V 150H	1.5" WH to 4" PVC Slip Casing	4"x 3" reducer bushing; 4" slip coupling	WH150V204 WH150H204
150V 150H	1.5" WH to 6" PVC Slip Casing	6"x 3" reducer bushing; 6" slip coupling	WH150V206 WH150H206
200V 200H	2." WH TO 3" PVC Slip Casing	Special Order 3" x 2" reducer bushing; 3" slip coupling	WH200V203 WH200H203
200V 200H	2" WH TO 4" PVC Slip Casing	None Req. STANDARD 4" slip coupling	WH200V204 WH200H204
200V 200H	2" WH TO 6" PVC Slip Casing	6" x 4" reducer bushing; 6" slip coupling	WH200V206 WH200H206
200V 200H	2" WH TO 8" PVC Slip Casing	8" x 4" reducer bushing; 8" slip coupling	WH200V208 WH200H208
300V 300H	3" WH TO 3" PVC Slip Casing	Special Order 3" slip coupling	WH300V203 WH300H203
300V 300H	3" WH TO 4" PVC Slip Casing	None Req. STANDARD 4" slip coupling	WH300V204 WH300H204
300V 300H	3" WH TO 6" PVC Slip Casing	6" x 4" reducer bushing; 6" slip coupling	WH300V206 WH300H206
300V 300H	3" WH TO 8" PVC Slip Casing	8" x 4" reducer bushing; 8" slip coupling	WH300V208 WH300H208

Adapter kits for PE or steel flanged well casing/pipe - horizontal or vertical installation:

Accu-Flo Model	Wellhead/Lateral Pipe Configuration	Adapter Bushing Required	LANDTEC ADAPTER Part Number
150V	1.5" WH to 2" PVC Flanged Casing	Special Order 2"x 1.5" reducer bushing; 2" Van Stone Flange w/ bolt/gasket kit	WH 150V102
150V 150H	1.5" WH to 3" PVC Flanged Casing	3" Van Stone Flange w/bolt/gasket kit	WH150V103 WH150H103
150V 150H	1.5" WH to 4" PVC Flanged Casing	4"x 3" reducer bushing; 4" Van Stone Flange w/bolt/gasket kit	WH150V104 WH150H104
150V 150H	1.5" WH to 6" PVC Flanged Casing	6"x 3" reducer bushing; 6" Van Stone Flange w/bolt/basket kit	WH150V106 WH150H106
200V 200H	2." WH TO 3" PVC Flanged Casing	Special Order 3" x 2" reducer bushing; 3" Van Stone Flange w/bolt/gasket kit	WH200V103 WH200H103
200V 200H	2" WH TO 4" PVC Flanged Casing	4" Van Stone Flange w/bolt/gasket kit	WH200V104 WH200H104
200V 200H	2" WH TO 6" PVC Flanged Casing	6" x 4" reducer bushing; 6" Van Stone Flange w/bolt/gasket kit	WH200V106 WH200H106
200V 200H	2" WH TO 8" PVC Flanged Casing	8" x 4" reducer bushing; 8" Van Stone Flange w/bolt/gasket kit	WH200V108 WH200H108
300V 300H	3" WH TO 3" PVC Flanged Casing	Special Order 3" Van Stone Flange w/bolt/gasket kit	WH300V103 WH300H103
300V 300H	3" WH TO 4" PVC Flanged Casing	4" Van Stone Flange w/bolt/gasket kit	WH300V104 WH300H104
300V 300H	3" WH TO 6" PVC Flanged Casing	6" x 4" reducer bushing; 6" Van Stone Flange w/bolt/gasket kit	WH300V106 WH300H106
300V 300H	3" WH TO 8" PVC Flanged Casing	8" x 4" reducer bushing; 8" Van Stone Flange w/bolt/gasket kit	WH300V108 WH300H108

Before You Begin

Review your landfill permits for any special restrictions or procedures that must be observed if excavation, trenching or other work on the landfill

Copyright 1992 Landfill Control Technologies, 6055 E. Washington Blvd. Commerce, CA 90040, (213)722-8202. Accu-Flo is a product trademark. Patent pending.

Procedure for Installing Accu-Flo Wellheads

Overall Summary

The installation procedure is divided into three sections as follows:

STEP 1. Install the Accu-Flo Wellhead onto the Well Casing, Header or Lateral.

STEP 1A. INSTALLING THE ACCU-FLO WELLHEAD TO A VERTICAL WELL CASING.

- PVC VERTICAL WELL CASING
- PE VERTICAL WELL CASING
- INSTALLING THE MEASUREMENT TUBE ASSEMBLY ONTO THE VERTICAL WELL CASING

STEP 1B. INSTALLING THE ACCU-FLO WELLHEAD TO A HORIZONTAL PIPE.

- PVC HORIZONTAL PIPE
- PE HORIZONTAL PIPE
- INSTALLING THE MEASUREMENT TUBE ASSEMBLY INTO THE HORIZONTAL PIPE.

STEP 2. Attach the flex hose to the gate valve assembly of the Accu-Flo Wellhead.

STEP 2A. CEMENTING THE 2 INCH PVC FLEX HOSE TO VALVE ASSEMBLY.

STEP 2B. FASTENING THE 3 INCH COMPOSITION RUBBER FLEX HOSE TO THE VALVE ASSEMBLY.

STEP 3. Install the flex hose to a Header or Lateral Pipe.

STEP 3A. CEMENTING THE 2 INCH PVC FLEX HOSE TO THE HEADER OR LATERAL.

STEP 3B. ATTACHING THE 3 INCH COMPOSITION RUBBER FLEX HOSE TO THE HEADER OR LATERAL.

WARNING: NEVER CUT THE MEASUREMENT TUBE ASSEMBLY OF ANY ACCU-FLO WELLHEAD. The length of the measurement tube assembly has been designed and tested at its current length. Any alterations to the measurement tube assembly will alter the differential pressure data taken at the wellhead and can compromise flow accuracy.

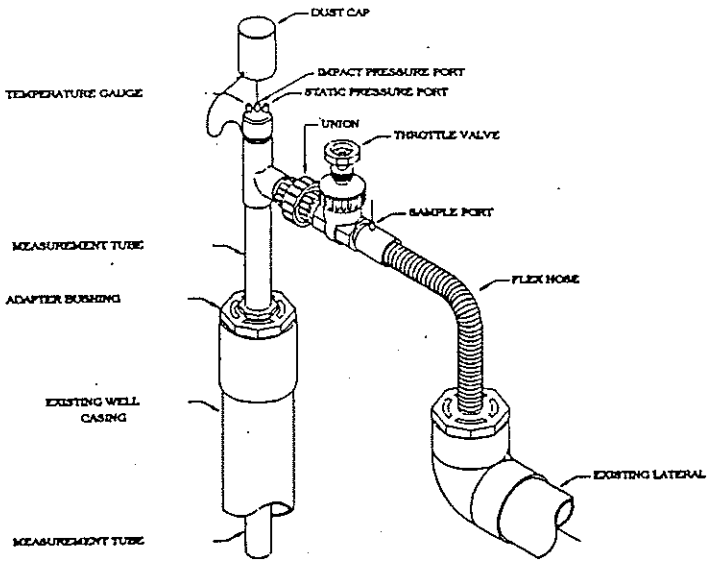

VERTICAL WELLHEAD ASSEMBLY

Drawing 1A -1. Vertical Accu-Flo Wellhead Assembly

Measurement Tube Assembly... incorporates a pre-positioned and pre-calibrated impact tube which is used to measure flow. The assembly extends into the well casing for a compact installation.

Adapter Bushing... Provides versatile mounting utilizing standard fittings or convenient Accu-Flo Adapter Kits for PVC or PE well casings.

Dust Cap... Protects temperature gauge and ports from the dust and weather.

Temperature Gauge... indicates gas temperature which is required for calculating accurate gas flow rates and to determine internal landfill conditions including nearby subsurface fires.

Gas Pressure Ports... have quick connect fittings for determining static and differential pressure necessary for flow calculations. They can also be used to take gas samples.

Union Disconnect... allows convenient removal for inspection, adjustment and maintenance.

Throttle Valve... provides precise flow control, positive shutoff and inert seat materials.

Sample Port... permits quick connect fittings for taking gas samples and vacuum readings downstream of the control valve.

Copyright 1992 Landfill Control Technologies, 6055 E. Washington Blvd. Commerce, CA 90040, (213)722-8202. Accu-Flo is a product trademark. Patent pending.

diameter. (See the prior Accu-Flo Adapter Kit Chart for the necessary adapters.)

3. **Combine the various bushings,** reducers and flanges to determine that they will all fit together for the given well casing size. Do not glue or cut anything at this time.
4. **Set aside the reducer bushing provided** with the Accu-Flo wellhead. It will be used later. It is either:

Accu-Flo Model	Bushing Provided
150	3" x 1 1/2"
200	4" x 2"
300	4" x 3"

5. **Put the neoprene flange gasket,** provided with the Van Stone flange, onto the PE or steel well casing flange.
6. **Use two open-ended wrenches to bolt** the Van Stone flange to the PE well casing flange with the bolts provided. Make sure the gasket is properly positioned between the two flanges and do not overtighten. (See drawing 1A-2)
7. **Cement any other necessary reducer** bushings to the flange attached in step 6. (DO NOT GLUE THE REDUCER BUSHING SET ASIDE IN STEP 4.) (See PVC gluing instructions in Appendix A.)
8. **Proceed to the next section --** "Installing the Measurement Tube Assembly on to the Vertical Well Casing".

Installing the Measurement Tube Assembly onto the Vertical Well Casing

LANDTEC recommends the use of high grade vacuum grease (See page 5 for source) for installing the measurement tube assembly for a vertical wellhead onto a PVC well casing. This gives greater flexibility when adjusting the height of the wellhead as a result of ground settling or build-up. The wellhead can also be quickly removed and the casing can be cut down or extended as necessary.

Vacuum grease also allows the Accu-Flo wellhead to be removed from the well casing so the well can be accessed for sounding. If the wellhead is cemented to the bushing, it will not be possible to easily remove the wellhead. However, the PVC cap may still be unscrewed for access.

1. **Apply vacuum grease to the outside** surface of the reducer bushing provided with the Accu-Flo wellhead and previously set aside. See Drawing **1A - 3** on the prior page. This surface will contact the inside of the slip coupling, another reducer

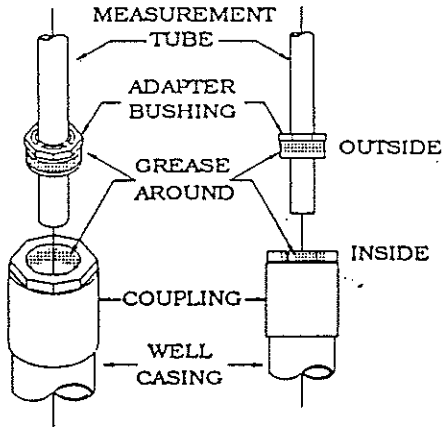

Drawing 1A - 3. Applying High Vacuum Grease for Vertical Wellhead reducer bushing.

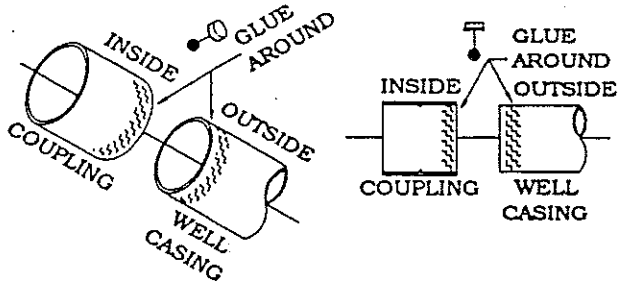

When using PVC primer or glue, put it around both parts being glued. (See PVC gluing instructions in Appendix A.)

Copyright 1992 Landfill Control Technologies, 6055 E. Washington Blvd. Commerce, CA 90040, (213)722-8202. Accu-Flo is a product trademark. Patent pending.

Step 1B. Installing the Accu-Flo™ Wellhead on a Horizontal Pipe

This section gives the instructions for installing the Accu-Flo™ wellhead on a horizontal PVC or PE pipe. The horizontal pipe should be sloped away from the wellhead so that gas condensate does not drain into or through the flow measurement tube. Go to Step 1A for vertical installation. For PVC pipe, the wellhead reducer bushing is glued with PVC cement to the pipe. For PE (polyethylene), the wellhead reducer bushing is glued into a flange which is bolted to the pipe. Proceed to the proper section below depending on the pipe material - PVC or PE.

See Drawing 1B - 1 below.

PVC Horizontal Pipe

The Horizontal Pipe must be PVC. If PE pipe, go to next section.

1. **If the installation requires it, cut the** pipe at the point where the horizontal Accu-Flo wellhead is to be installed. Clean the cut pipe of any plastic burrs as necessary.
2. **Measure the outside diameter (O.D.) of** the horizontal pipe to which the wellhead will be attached.
3. **Note the direction of gas flow in the** horizontal pipe. The Measurement Tube Assembly of the Accu-Flo wellhead will be inserted towards the source of the flow. If installed backwards, flow measurement will not be possible.
4. **Determine the necessary adapters to fit** the pipe diameter. See the prior Accu-Flo Adapter Kit Chart for the necessary adapters. It is possible that the horizontal pipe is larger than 8" in diameter. If so, refer to a PVC fittings catalog for necessary adapters.
5. **Combine the various couplings,** reducers and the Accu-Flo Wellhead to determine that they all do fit together for the given pipe size. Do not glue or cut anything at this time.
6. **Set aside the reducer bushing provided** with the Accu-Flo wellhead. It is either:

Accu-Flo Model	Bushing Provided
150	3" x 1 1/2"
200	4" x 2"
300	4" x 3"

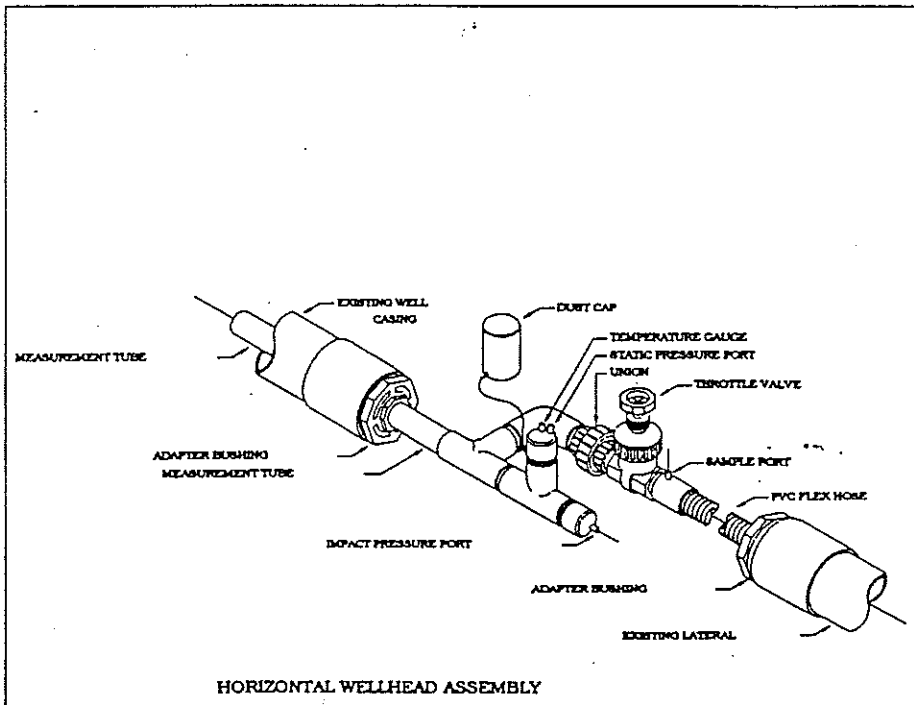

Drawing 1B -1.
Horizontal Accu-Flo Wellhead Assembly.

Measurement Tube Assembly... incorporates a pre-positioned and pre-calibrated impact tube which is used to measure flow. The assembly extends into the well casing for a compact installation.

Adapter Bushing... Provides versatile mounting utilizing standard fittings or convenient Accu-Flo Adapter Kits for PVC or PE well casings.

Dust Cap... Protects temperature gauge and ports from the dust and weather.

Temperature Gauge... indicates gas temperature which is required for calculating accurate gas flow rates and to determine internal landfill conditions including nearby subsurface fires.

Gas Pressure Ports... have quick connect fittings for determining static and differential pressure necessary for flow calculations. They can also be used to take gas samples.

Union Disconnect... allows convenient removal for inspection, adjustment and maintenance.

Throttle Valve... provides precise flow control, positive shutoff and inert seat materials.

Sample Port... permits quick connect fittings for taking gas samples and vacuum readings downstream of the control valve.

Copyright 1992 Landfill Control Technologies, 6055 E. Washington Blvd. Commerce, CA 90040, (213)722-8202. Accu-Flo is a product trademark. Patent pending.

the Measurement Tube Assembly into the reducer bushing as desired. Typically, a very compact installation is achieved by sliding the Measurement Tube Assembly as far as possible into the upstream pipe.

3. **Mark the desired position with a pencil** or marker by drawing a line on the Measurement Tube Assembly where it exits from the reducer bushing. Glue will be put below this mark to cement the tube to the reducer bushing but wait until step 5.
4. **Before gluing the Measurement Tube** Assembly, make sure that the flex hose that will be attached to the end of the wellhead will reach its desired connection point on the lateral or header pipe. Determine the final position of the wellhead valve and sample ports before any glue is applied.
5. **Remove the Measurement Tube** Assembly from the reducer bushing.
6. **Apply PVC primer to the area extending** approximately two inches below the marked line on the Measurement Tube Assembly and on the inside of the reducer bushing that will contact the Measurement Tube Assembly. (See PVC gluing instructions in Appendix A.)
7. **Slide the Measurement Tube Assembly** back into the reducer bushing up to the beginning of the area that had been primed in step 6.
8. **Apply two heavy coats of PVC cement** to the primed sections of the Measurement Tube, because there is no way to apply PVC cement to the inside of the reducer bushing.
9. **Immediately slide the Measurement** Tube into the reducer bushing through the PVC cement already applied on the Measurement Tube Assembly to the appropriate mark. Hold the Measurement Tube Assembly until the glue has set. Do not disturb the glued joint until properly set.
10. **Turn the Accu-Flo Wellhead valve** handle clockwise to shut the valve and stop landfill gas from escaping from the wellhead.
11. **Proceed to Step 2 for attaching the flex** hose.

STEP 2. ATTACH THE FLEX HOSE TO THE GATE VALVE ASSEMBLY.

The flex hose is attached using one of two methods.

For Accu-Flo models 150 and 200 proceed to Step 2A for gluing the 2 inch PVC flex hose to the valve assembly.

The Accu-Flo model 300 which has a composition rubber flex hose is attached with clamps in Step 2B below.

STEP 2A: CEMENTING THE 2 INCH PVC FLEX HOSE TO VALVE ASSEMBLY

Complete this step only if you are installing a model 150 or 200 Accu-Flo wellhead.

1. **Using primer and PVC solvent cement,** cement the flex hose to the valve assembly. (See PVC gluing instructions in Appendix A.) Apply primer and solvent cement to both the PVC flex hose and inside of the coupling extending from the valve assembly.
2. **Firmly hold the flex hose into the valve** coupling while the glue dries and sets for several minutes.
3. **Proceed to Step 3 – Installing the Flex** Hose to the Header or Lateral.

STEP 2B: FASTENING THE 3 INCH COMPOSITION RUBBER FLEX HOSE TO VALVE ASSEMBLY

Complete this step only if you are installing a model 300 Accu-Flo Wellhead. This model is shipped with one composition rubber flex hose and two stainless steel hose clamps and two PVC collar rings.

1. **There.are two, 3 inch PVC plastic collar** rings included with the 3 inch composition rubber flex hose. The long sloping ramp side of the ring is positioned towards the end of the pipe. The purpose of each collar ring is retain the flex hose on the plastic pipe, especially when the hose is under extended tension.
2. **Prime the inside of the collar ring with** PVC primer.
3. **Slide the collar ring onto the PVC pipe** extension from the Accu-Flo wellhead. Move the collar at least 2 1/2 inches up from the end of the pipe.

Copyright 1992 Landfill Control Technologies, 6055 E. Washington Blvd. Commerce, CA 90040, (213)722-8202. Accu-Flo is a product trademark. Patent pending.

2. **Take the flex hose to be attached to the** lateral or header and confirm that it does reach. The 2 inch PVC hose is usually glued into a 2 inch slip fitting or adapter bushing that fits the required pipe diameter. (Because LANDTEC does not know the size or the material of the lateral or header pipe, it is up to the installer to provide the required adapter fittings.)
3. **If several fittings are required, test them** for proper fit prior to cementing them into position in the lateral or header pipe.
4. **It is recommended that the bushings** necessary to fit the pipe diameter be installed with PVC glue first and allowed to set. (See PVC gluing instructions in Appendix A.)
5. **Install the 2 INCH FLEX HOSE onto the** header or lateral last. Properly apply PVC primer and solvent cement to the flex hose and fitting on the header or lateral. Firmly insert the PVC flex hose into the header or lateral fitting and hold it in position until it is set.
6. **Congratulations, you have completed** the installation of the Accu-Flo wellhead. It is recommended that the newly installed wellhead be marked with an identification number for reference purposes. It is also suggested that the wellfield log and related well files be updated to reflect the changes made. Please review further sections of this manual to learn how to use the Accu-Flo's features.

STEP 3B: ATTACH THE 3 INCH COMPOSITION RUBBER FLEX HOSE TO THE HEADER OR LATERAL

Complete this step only if you are installing a model 300 Accu-Flo wellhead. This model is shipped with one composition rubber flex hose, two stainless steel hose clamps, and two PVC plastic collar rings.

See Drawing 3B - 1 and 3B - 2 below.

1. **Check to make sure that the flex hose** attached in step 2 does reach the desired connection fitting.
2. **Because LANDTEC does not know the** size or composition (PVC OR PE) of the lateral or header pipe, it is up to the installer to provide the required adapter fittings and or bushings. The required fittings might be very similar to those required in LANDTEC's adapter kits, although it is very possible that the pipe could be larger than 8" in diameter in

Drawing 3B - 1. Composition Rubber Flex Hose attached to PVC pipe.

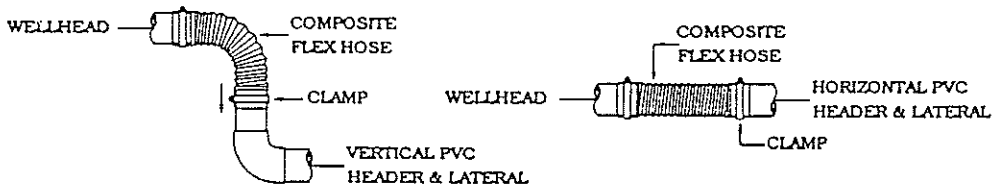

Drawing 3B - 2. Composition Rubber Flex Hose attached to flanged PE pipe.

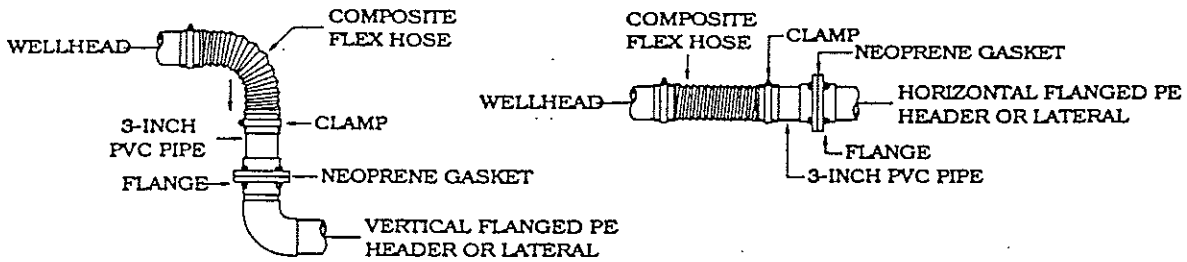

Copyright 1992 Landfill Control Technologies, 6055 E. Washington Blvd. Commerce, CA 90040, (213)722-8202. Accu-Flo is a product trademark. Patent pending.

Field Operations

This section describes the basic how and why the Accu-Flo wellhead is used to control landfill gas. See Appendix B for more information on:

- how landfill gas is generated
- subsurface fires
- techniques for controlling LFG
- well field monitoring
- making adjustments to the well field
- adjustment criteria
- establishing target flows
- well field optimization
- LFG migration control

Methods Of LFG Control

The Accu-Flo Wellhead is a primary tool which can control landfill gas (LFG) surface emissions, migration and extraction on the open or closed landfill.

The quality and quantity of LFG gas extracted from the landfill can indicate the overall decomposition rate and so-called health of the methane producing organisms in the landfill. If a well in the LFG extraction system extracts too much methane, air (oxygen) from the surface of the landfill can be pulled into the landfill killing the methane producing organisms. This stops decomposition until the proper oxygen free environment is re-established. The air can also cause sub-surface fires.

Ask any experienced landfill technician and they will tell you that each landfill is different. Each well has its own characteristics. Unless the correct data is gathered, it is difficult to maximize LFG collection, control emissions and prevent migration at each well location.

There are four generally accepted ways to control landfill gas extraction:

•**Controlling by wellhead vacuum.** The method assumes that wellhead vacuum is directly related to the gas extraction rate.

•**Controlling by wellhead valve position.** Unless the valve handle is pre-calibrated for any given gas flow rate, this method is unpredictable and should not be relied upon.

•**Controlling by gas composition.** This method measures methane and/or nitrogen (balance gas) concentrations at individual wellheads.

•**Controlling by flow rates.** This is a more exact method for determining proper gas flow adjustments at individual wells.

Please see Appendix B for additional information about each technique, its benefits and drawbacks.

Well Field Adjustment - Purpose And Objectives

The objective of well field adjustment is to achieve steady state operation of the gas collection system by stabilizing the rate and quality of extracted LFG in order to achieve one or several goals. Typical reasons for recovery of LFG and close control of the well field are:

- Achieve and maintain effective subsurface gas migration control.
- Achieve and maintain effective surface gas emissions control.
- Assist with proper operation of control and recovery equipment.
- Avoidance of well overpull and maintenance of a healthy anaerobic state within the landfill.
- Optimize LFG recovery for energy recovery purposes.
- Control nuisance LFG odors.
- Prevent or control subsurface LFG fires.
- Protect structures on and near the landfill.
- Meet environmental and regulatory compliance requirements.

Well field adjustment is partly subjective and can be confusing because it involves judgment calls based on simultaneous evaluation of several variables as well a general knowledge of site specific field conditions and historical trends. Well field evaluation and adjustment consists of a collection of tools and techniques which may be used in combination to achieve steady state well field operation.

Taking Measurements At The Accu-Flo Wellhead

There are two very different ways to take data measurements at an Accu-Flo wellhead – with LANDTEC's integrated GEM-500 and with individual field instruments. Proceed to the appropriate section below depending on the method used.

Copyright 1992 Landfill Control Technologies, 6055 E. Washington Blvd. Commerce, CA 90040, (213)722-8202. Accu-Flo is a product trademark. Patent pending.

multiple scales for greater accuracy between 0.0 to 10.0 inches of water.

- Methane Gas Analyzer
- Oxygen Analyzer
- Gas extraction pump to overcome wellhead vacuum
- Accu-Flo Wellhead Flow charts or the Accu-Flo hand held calculator (optional)

When measuring an Accu-Flo Wellhead with standard field instruments:

1. **Remove the dust cap from the Accu-Flo** wellhead.
2. **Attach the two quick connect fittings** on the 1/4" tygon tubing from the micromanometer. If differential pressures is to be measured, the fitting on the center of the Accu-Flo wellhead is for the impact pressure port which reads the pressure on the impact tube. The quick connect fitting on the outside port of the wellhead is for the static pressure.
3. **Read the static and impact pressure** from the wellhead and write them down. The difference between the static and impact pressure is the differential pressure or velocity pressure. It should be a positive number. Remove the micromanometer hoses.
4. **Connect the vacuum pump to the** wellhead, turn on the vacuum pump and extract LFG samples into a sample bag or LFG container.
5. **Analyze the LFG samples for methane** and oxygen. Record the results.
6. **Read the temperature on the Accu-Flo** Wellhead of the LFG flowing out of the well. Record the temperature.
7. **Determine or Set Gas Flow Rates in the** sections below.
8. **Replace the dust cap when done.**

Determining The Gas Flow Rate

To determine the current gas flow rate (SCFM) of the well, complete the following steps:

1. **Use LANDTEC's Flow Charts provided** with the wellhead or use the optional LANDTEC hand held Flow Computer. You will need to know the Accu-Flo model wellhead you are using (Model 150, 200, or 300) and its configuration - either Horizontal or Vertical to properly calculate the flow. There are two charts for each model – one for wet gas and the other for dry gas. To calculate the amount of heat (Btu's) in the gas, or do other calculations, the gas is usually converted to the amount of dry gas available. The second chart shows the amount of dry gas at the wellhead.
2. **At the end of this manual are copies of** all the LFG Flow Charts for the various models and types.
3. **Using the appropriate chart, locate the** point where the measured velocity pressure (horizontal axis) intercepts the curve on the chart that best approximates the wellhead temperature.
4. **Follow across to the left side of the** chart entitled, "Flow" (vertical axis) to determine approximate gas flow rate in standard cubic feet per minute (SCFM).

Note: Static pressure is assumed to be one atmosphere when using LANDTEC's SCFM Flow Charts. There is no problem when LANDTEC's GEM-500 and or hand held calculator is used to calculate flow because actual static pressure is used in the calculations.

LANDTEC's Preprogrammed Hand held Calculator (Optional): calculates gas flow rates with greater accuracy and speed than the manual method described above that uses LANDTEC's Accu-Flo SCFM Gas Flow Charts. It uses a user friendly question and answer format and calculates gas flow rates in seconds. The user inputs the model and type of Accu-Flo wellhead, static and impact pressures, and gas temperature and the calculator displays the wet and dry LFG flow rate.

Setting Gas Flow Rates

To set the gas flow rate (SCFM) for an Accu-Flo wellhead, complete the steps below. Refer to the procedures for measuring the velocity pressure and wellhead temperature discussed earlier in this section.

1. **Determine the desired gas flow rate** (SCFM) for the Accu-Flo wellhead.
2. **Find LANDTEC's SCFM Flow Chart for** the Accu-Flo wellhead model and type of gas flow (wet or dry) provided with the wellhead or at the end of this manual.
3. **Find that flow rate on the vertical axis** of the flow curve graph. Move across the chart to the right until you intercept the curve that best approximates the wellhead gas temperature at the wellhead. Move

Copyright 1992 Landfill Control Technologies, 6055 E. Washington Blvd. Commerce, CA 90040, (213)722-8202. Accu-Flo is a product trademark. Patent pending.

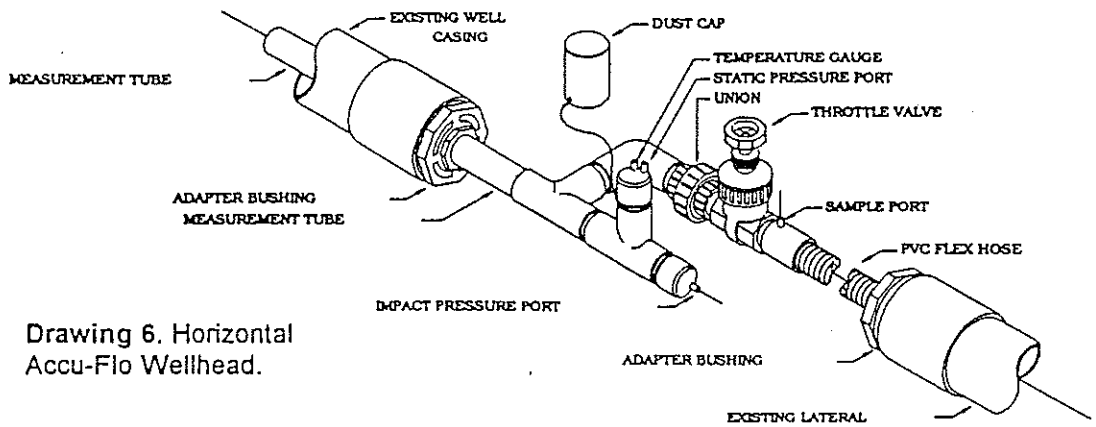

Drawing 6. Horizontal Accu-Flo Wellhead.

Horizontal Accu-Flo Wellhead General Maintenance Accu-Flo Models 150 & 200

The maintenance, disassembly and part replacement procedures for Accu-Flo wellhead models 150 and 200 are presented below, followed by the corresponding procedures for Accu-Flo wellhead model 300.

Accu-Flo Models 150 and 200 are virtually the same except for the diameter of the measurement tube assembly which is 1 1/2 inches on the Model 150 and 2 inches on the Model 200.

Tube Cap, Impact Tube And Pressure Ports Assembly

The figure above shows how the tube cap, impact tube and pressure ports can be disassembled. The following provides more details:

1. **Static Pressure Port: Consists of 1/8"** (flow ID) quick connect coupling with automatic latching mechanism. It is screwed into cap to create the Static Pressure Port. **Recommended Maintenance:** Periodically inspect it for signs of corrosion or brittleness. Replace as necessary.
2. **Impact Pressure Port: This pressure** port has a 1/8" (flow ID) quick connect coupling with automatic latching mechanism. It screws into the center of the tube cap and is connected to the impact tube with a hex nut on the underside.

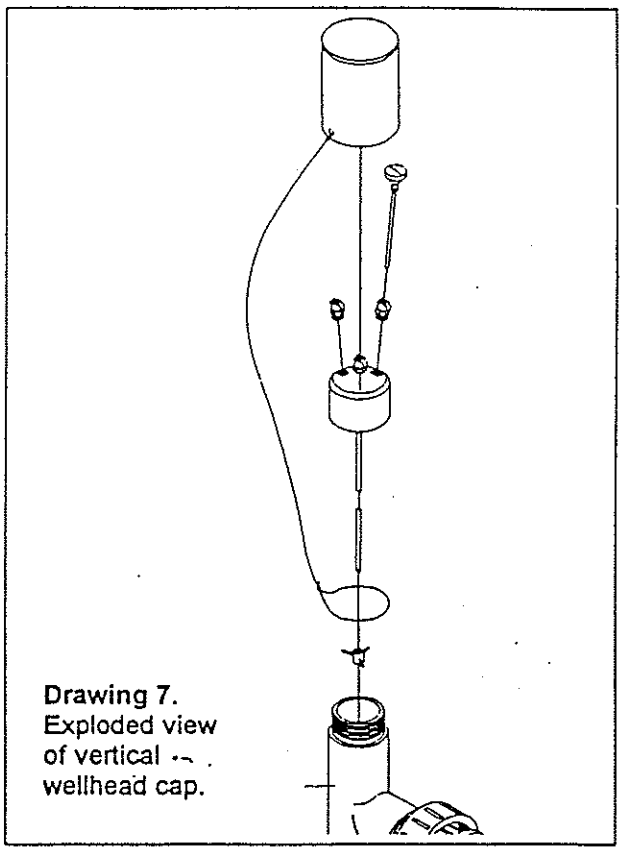

Drawing 7. Exploded view of vertical wellhead cap.

Recommended Maintenance: Periodically inspect for corrosion or brittleness caused by extreme weather conditions and UV damage. To replace, unscrew the tube cap. Secure the hex nut from the inside of cap with an open-end wrench and then use another open-end wrench to unscrew the quick connect coupling. Replace as necessary.

Copyright 1992 Landfill Control Technologies, 6055 E. Washington Blvd. Commerce, CA 90040, (213)722-8202. Accu-Flo is a product trademark. Patent pending.

gas sampling. A single cap is provided to keep this port free from dust on the horizontal model wellhead.
Recommended Maintenance: Is similar to the other quick connect pressure ports. Check periodically for signs of corrosion, blockage and/or UV brittleness.

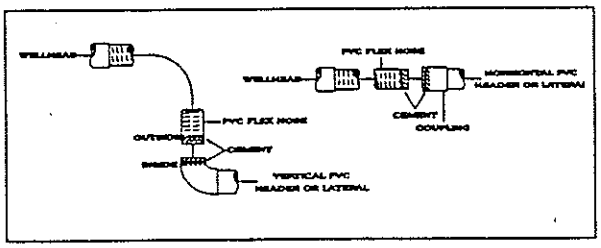

Accu-Flo Wellhead Series 150 And 200: PVC Flex Hose

The figure above shows the PVC flex hose attached to the wellhead and lateral/header pipe.

Flex Hose: The flex hose is shipped separately and welded to the gate valve during installation using solvent cement.

Recommended Maintenance: Repair of a damaged flex hose could be accomplished by using one or more PVC 2" slip x 2" slip coupling(s) to splice and weld two flex hose pieces together using flexible PVC Cement.

Measurement Tube Assembly And Pvc Pipe Fittings

The measurement tube assembly of the Accu-Flo Wellhead series 150 and 200 main body includes a various PVC Schedule 80 pipe fittings that are factory assembled. In most cases, if these parts crack or are damaged, the wellhead should be replaced.

Remember: NEVER SHORTEN OR ALTER THE MEASUREMENT TUBE IN ANY MANNER.

Accu-Flo Model 300: Maintenance, Disassembly And Part Replacement Procedures

The Accu-Flo model 300 wellhead is discussed in three parts: Assembly A, B and C. The maintenance and disassembly procedures for each assembly (including how each part can be identified for replacement) is described below.

Assembly A - Accu-Flo 300 Impact Tube, Pressure Ports And Cap

Prior drawings shows how the impact tube, pressure ports and cap (s) are assembled and attached to the wellhead.

1. **Static Pressure Port: This pressure** port consists of a 1/8" (flow ID) quick connect coupling with an automatic latch mechanism. It screws into the center of the cap and is connected to the impact tube with a hex nut.
   Recommended Maintenance: Check periodically for corrosion and brittleness caused by extreme weather conditions. Replace as required.
2. **Impact Pressure Port: This pressure** port consists of a 1/8" (flow ID) quick connect coupling with an automatic latch mechanism. It screws into the center of the cap and is connected to the impact tube with a hex nut. The impact tube extends along the center line of the measurement tube assembly.
   Recommended Maintenance: Check periodically for corrosion and brittleness caused by extreme weather conditions. To replace first screw off the tube cap. Secure the hex nut from the inside of cap with an open-end wrench and then use another open-end wrench to screw off the quick connect coupling.
3. **Thermometer (1/8" thermometer with a** range of 0 to 220 degrees Fahrenheit): This part includes an 1/8" thermometer rod with a 0 to 220 Fahrenheit gauge. An 1/8" hose barb is affixed to the top part of the rod to stabilize the thermometer when it is inserted into the 1/8" quick connect coupling. The thermometer is inserted into quick connect coupling using a hose barb.
   Recommended Maintenance: To inspect the rod, push the automatic latching mechanism to release the thermometer then pull out the thermometer. To install, just push it back into the port until the quick connect coupling latches with an audible click.
4. **Cap: The 3" impact tube cap is located** at the top of the measurement tube assembly on a vertical wellhead and at the front of the measurement tube assembly on a horizontal wellhead. The impact tube

Copyright 1992 Landfill Control Technologies, 6055 E. Washington Blvd, Commerce, CA 90040, (213)722-8202. Accu-Flo is a product trademark. Patent pending.

APPENDIX A

SCHEDULE 80 PVC SOLVENT CEMENT INSTRUCTIONS

LANDTEC's Accu-Flo wellheads are made of schedule 80 and adapter kits are schedule 40 PVC. Solvent cement is the recommended method of welding PVC pipe, couplings, reducer bushings and PVC flexible hose (Model 150 & 200). These procedures are not meant to supersede instructions you may have received with your brand of primer and solvent cement.

In general, when given a choice, a colored primer/cleaner or PVC cement is preferred over clear products because you can see where it has been applied. There are special PVC solvent cements for different sizes of pipes and fittings, conditions and uses. The same is true for primers/cleaners. Match the correct product to the application.

A special cement is required for PVC flexible hose applications. When gluing flex hose to connectors, make sure the proper cement is selected. This glue and primer is not effective for joining other types of piping materials in kind, or to PVC; transition fittings are required.

How It Works

Detailed step by step procedures on how to make good solvent cemented joints are given below. However, we feel that knowing the principles of solvent cementing will help facilitate better quality installation of Accu-Flo wellheads at your landfill gas collection system.

Primer is used to wet, penetrate and soften the surface area of the pipe and fitting to be joined, followed by a generous application of cement that is applied to both services. If the cement coatings on the pipe and fitting are wet and fluid, when forcibly joined, they will fuse together. As the cement dissipates, sets and cures, the cement layer and softened surfaces will harden with a corresponding increase in joint strength. A good joint will take the required pressure applicable to landfill wellhead vacuum operation long before the joint is fully dry and final strength is obtained.

The Gluing Environment

Extremes in temperatures are not conducive to good solvent cementing. Avoid solvent cementing in hot weather in excess of 110F and cold weather of 40F or below. For chronically wet conditions, such as the repair of existing piping which contains moisture from gas condensate, use PVC primer and Cement rated for application under wet conditions.

Primers/Cleaners

In general primers are typically purple in color and are for PVC and CPVC applications. The function of a primer is to penetrate and soften the bonding surfaces of pipe and fittings to prepare them for solvent cementing. Use the primer within 3 years of the date stamped on the can. The product should meet ASTM F-656.

Before the primer is used, the pipe, and fittings should be prepared with a square cut, deburred, cleaned and checked for proper fit. Read all cautions and warnings on the can and product MSDS (Material Safety Data Sheet).

Step 1 - Apply Primer

1. **Cut pipe square. Remove all burrs from** both the inside and outside of the pipe.
2. **Remove dirt, grease, and moisture. A** thorough wipe with clean dry rag is usually sufficient.
3. **Check for dry fit. For proper** interference fit, pipe should go easily into fitting 1/4 to 3/4 of the way.
4. **Use a suitable applicator. The dauber** in some cans may not be the correct size for the application. In general the applicator should be 1/2 the diameter of the pipe. Apply primer with an adequate size applicator. (See charts below). A dauber, brush top applicator, swab or paint brush may be used. A rag is not recommended, as repeated contact with skin may cause irritation or blistering.
5. **Apply primer freely to the socket** keeping the surfaces wet and applicator wet and in motion until the entire joining surface is properly softened. Re-dip if necessary. Avoid puddling in socket. Take care to avoid excess primer in bell end pipe.
6. **Now apply primer to pipe surface in the** same manner equal to the depth of the socket.
7. **Apply primer again to the fitting socket.** (This second application is especially recommended for bell end pipe and fittings fabricated from pipe stock, for many of them have especially hard inside surfaces.) Avoid puddling.
8. **To check penetration, you should be** able to scratch or scrape a few thousandths of the primed surface away.

Copyright 1992 Landfill Control Technologies, 6055 E. Washington Blvd. Commerce, CA 90040, (213)722-8202. Accu-Flo is a product trademark. Patent pending.

APPENDIX B

Landfill Gas Field Operations

Landfill Gas Generation

While a detailed discussion of the phenomena and theory of methane generation and its recovery is beyond the scope of this appendix, a brief overview will be helpful.

Initially, when decomposable refuse is placed into a municipal solid waste landfill, the refuse is emplaced with air from the surrounding atmosphere. Through a natural process of bacterial decomposition the oxygen from the air is consumed and an anaerobic, (i.e., oxygen free), environment is created within the landfill. This anaerobic environment is one of several conditions necessary for the formation of methane. If oxygen is reintroduced into the landfill, those portions into which the oxygen are introduced are returned to an aerobic, (i.e., oxygen present), state and the methane producing bacteria population is killed off.

Some time must pass before the productive capacity is returned to normal. Since there is some methane (of a given quality) within the landfill void space, a decline in methane quality is only gradually apparent depending upon the size of the landfill, mass and other factors.

Carbon dioxide is also produced under either aerobic or anaerobic conditions. Under static conditions, the landfill gas will be composed of roughly half methane and half carbon dioxide with a little nitrogen.

As air is introduced into the landfill, the oxygen is initially converted to carbon dioxide and a nitrogen residual remains. Measurement of residual nitrogen is usually a good indicator of the anaerobic state of the landfill, however, it cannot be easily directly measured. It can however be assumed and estimated, using a subtraction basis, as the balance gas. Hence, measurement of carbon dioxide is an intermediate step. Because carbon dioxide levels may fluctuate depending on the changing concentrations of the other constituent gases, carbon dioxide levels are not evaluated directly but are considered in light of other data.

In evaluation of residual nitrogen, allowances must be made if there has been any air leakage into the gas collection system or if there has been serious overpull. If enough air is drawn into the landfill, not all oxygen is converted into carbon dioxide and thus the oxygen is apparent in the sample. It is ideal to perform routine analysis of individual wells, as well as an overall well field composite sample, by gas chromatograph. This however is not always practical at every landfill and can be quite time consuming and costly.

Under some conditions there may be a small amount hydrogen in the LFG, (about 1 percent, usually much less), this may affect field monitoring response factors in some instruments, but otherwise can be ignored.

Subsurface Fires

If very large quantities of air are introduced into the landfill, either through natural occurrence or overly aggressive operation of the LFG system, a partly unsupported subsurface combustion of the buried refuse may be initiated. Subsurface fire situations are difficult to control or extinguish once started, present health and safety hazards, and can be quite costly. Therefore, prevention, by good operation of the collection system and maintenance of the landfill cover is the best course of action. The presence of carbon monoxide is an indicator of poorly supported combustion within the landfill.

Techniques For Controlling Landfill Gas

There are many techniques for controlling landfill gas extraction. These techniques represent tools that are used together to control landfill gas. The Accu-Flo is designed to work with all of these techniques. Below is a discussion of the individual techniques, how to use them and their limitations. Reliance on only a few of the techniques discussed can lead to misinterpretation of field data and improper operation of the wellfield. Later we will discuss the best use of these techniques to optimize landfill gas control.

- **Controlling by Wellhead Valve Position.** Unless the valve handle is pre-calibrated for any given flow rate, this method is unreliable and should not be relied upon. The position of the valve handle alone does not provide sufficient information about the wellfield to control it. It is, however, useful to note the relative position of the valve, and essential to know which valves are fully open or closed.

- **Controlling by Wellhead Vacuum.** This technique relies on the relationship of well pressure/vacuum to flow for a given well. Sole reliance upon this method, however, can be misleading. This is because the square root relationship between flow and pressure is difficult to relate to while performing

Copyright 1992 Landfill Control Technologies, 6055 E. Washington Blvd. Commerce, CA 90040, (213)722-8202. Accu-Flo is a product trademark. Patent pending.

Normally, a complete set of field readings consists of the following:

- Name of person taking readings
- Date/time of each reading
- Methane (CH_4)
- Oxygen (O_2)
- Carbon dioxide (CO_2)
- Balance Gas (primarily nitrogen N_2)
- Wellhead gas temperature (flowing)
- Ambient temperature
- Static pressure (P_s) (from GEM-500 or magnehelic)
- Velocity head (P or P_t) (from GEM-500 or pitot tube and magnehelic)
- Wellhead gas flow (from GEM-500, or pitot tube & magnehelic, or anemometer/velometer)
- Wellhead adjustment valve position (initial and adjusted)
- New wellhead vacuum and flow information after adjustment
- Calculate each well's LFG and methane flow and sum total.
- Observations/comments.

Additionally carbon monoxide (CO) or hydrogen sulfide (H_2S) readings may be taken if problems are suspected.

Supplementary monitoring once to several times a week may be performed using an abbreviated form of field readings.

An abbreviated form of field readings consist of a combination of some or all of the following:

- Name of person taking readings
- Date/time of each reading
- Methane (CH_4)
- Oxygen (O_2)
- Wellhead gas temperature (flowing)
- Ambient temperature
- Static pressure (P_s) (from GEM-500 or magnehelic)
- Velocity head (P or P_t) (from GEM-500 or pitot tube and magnehelic)
- Wellhead gas flow (from GEM-500, or pitot tube and magnehelic, or anemometer/velometer) (Flow can be calculated with LANDTEC flow computer.)
- Wellhead adjustment valve position (initial and adjusted)
- New wellhead vacuum and flow information after adjustment.
- Observations/comments

The determination of which readings to include in the abbreviated set is based on field monitoring needs but should be standardized and include as a minimum: methane, oxygen, static pressure at the well head, and valve position with any adjustment.

Line vacuums and optionally gas quality may be taken at key points along the main gas collection header and subordinate branches. This helps to identify locations of poor performance, excessive pressure drop, or leakage.

Perform systematic monitoring of the well field, taking and logging measurements at each wellhead and major branch junction in the collection system.

During monitoring, examine landfill and gas collection system for maintenance issues. Record needed maintenance or unusual conditions. Examples of unusual occurrences or conditions are: unusual settlement or subsidence, signs of subsurface fires, cracks and fissures, liquid ponding, condensate/leachate weeping from side slopes, surface emissions and hot spots, and liquid surging and blockage in the gas collection system.

Field readings should be kept in a chronological log or data base as well as turned into management on a timely basis.

Making Well Field Adjustments

It is best to make well field adjustments based on measured data and the experience obtained at a given well empirically. It is also best to adjust the well based on flow. A desired well flow should be determined empirically based on experience with that well and some subjective knowledge about conditions at that well. This requires that operating experience and intuition be developed. The LFG operator/field technician soon develops a close personal knowledge of his or her well field.

The well field may be adjusted on the fly, (while the reading set is being taken), or after collection and evaluation of the complete set of data. This will depend on monitoring objectives. It should be realized that adjustment on the fly will affect the entire well field including wells which have not yet been monitored. Normally, readings will commence at the furthest well from the blower/flare facility.

Sometimes wells are adjusted based on vacuums in lieu of flow data, however, this is not recommended. Because of the square root relationship between flow and pressure, well adjustment by vacuum/pressure can be deceptive.

Copyright 1992 Landfill Control Technologies, 6055 E. Washington Blvd. Commerce, CA 90040, (213)722-8202. Accu-Flo is a product trademark. Patent pending.

or enhancing the spread of a subsurface fire. Sometimes a judicious compromise is necessary to achieve critical migration control objectives or because existing conditions do not allow otherwise. Such situations should be monitored closely.

LANDTEC Technical Tips

Landfill Control Technologies from time to time produces information of technical interest. Various subjects are covered as Technical Tips. Please call LANDTEC and ask for about the list of available topics.

Copyright 1992 Landfill Control Technologies, 6055 E. Washington Blvd. Commerce, CA 90040, (213)722-8202. Accu-Flo is a product trademark. Patent pending.

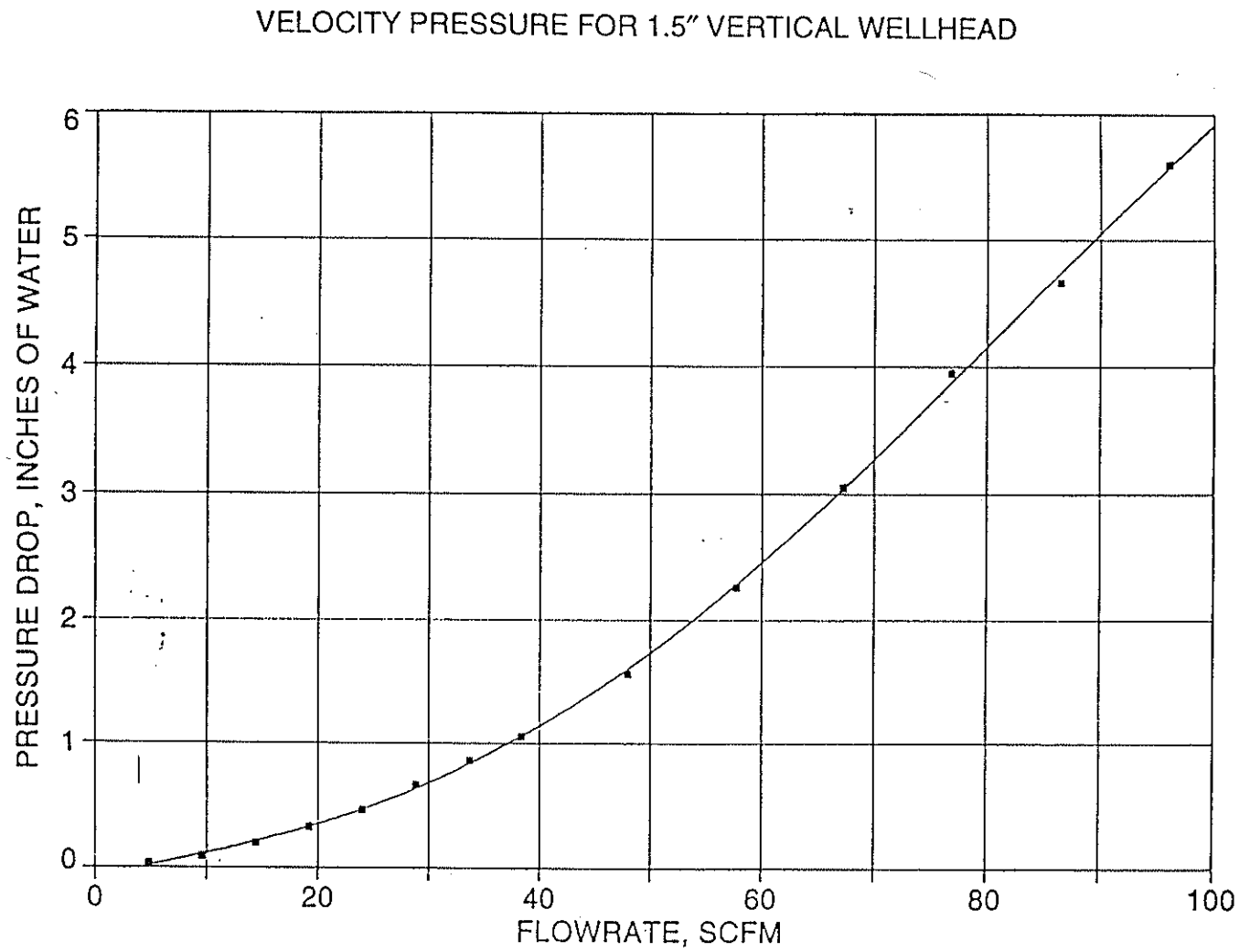
VELOCITY PRESSURE FOR 1.5" VERTICAL WELLHEAD
PRESSURE DROP, INCHES OF WATER
0
1
2
3
4
5
6
0
20
40
60
80
100
FLOWRATE, SCFM

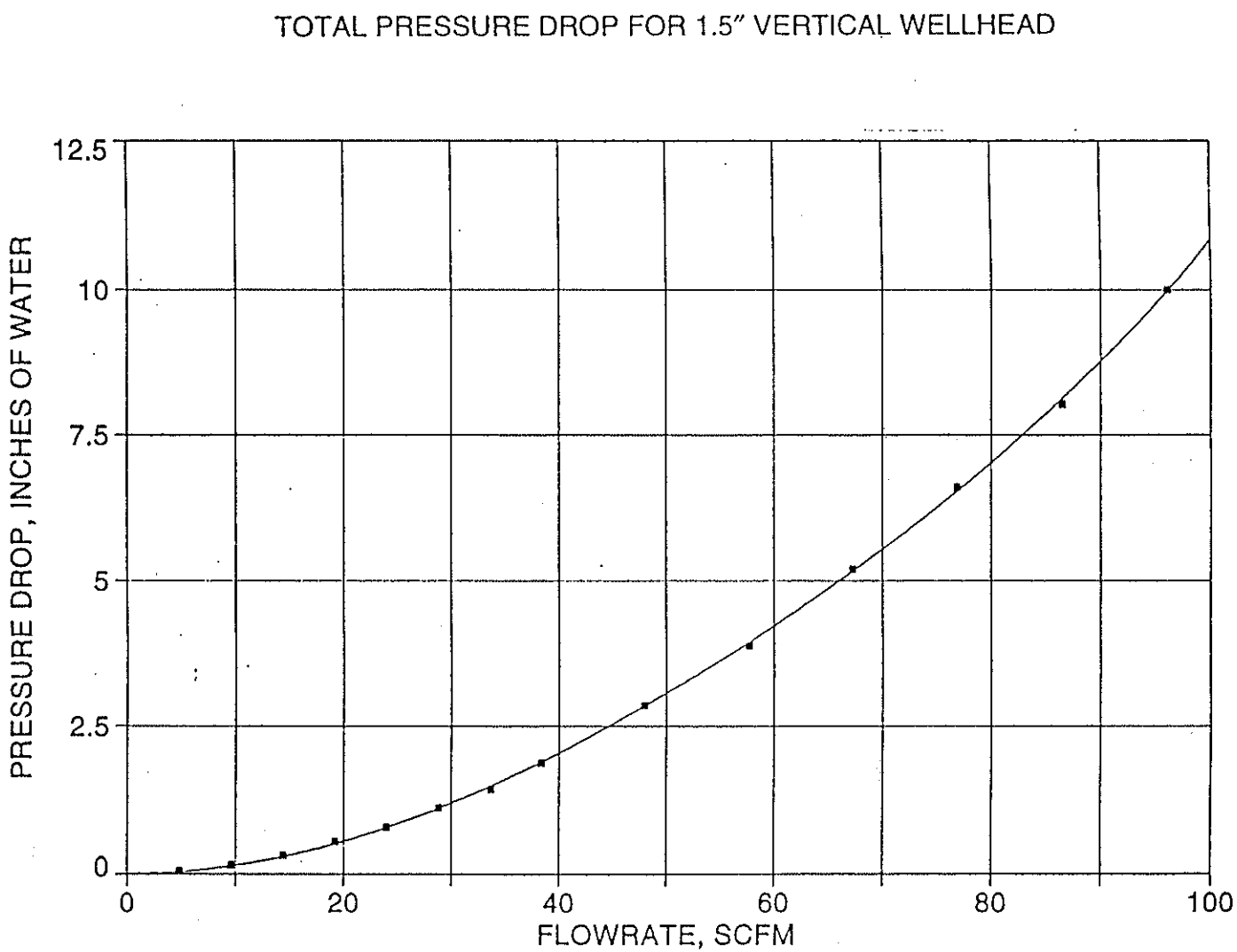
TOTAL PRESSURE DROP FOR 1.5" VERTICAL WELLHEAD
PRESSURE DROP, INCHES OF WATER
12.5
10
7.5
5
2.5
0
0
20
40
60
80
100
FLOWRATE, SCFM

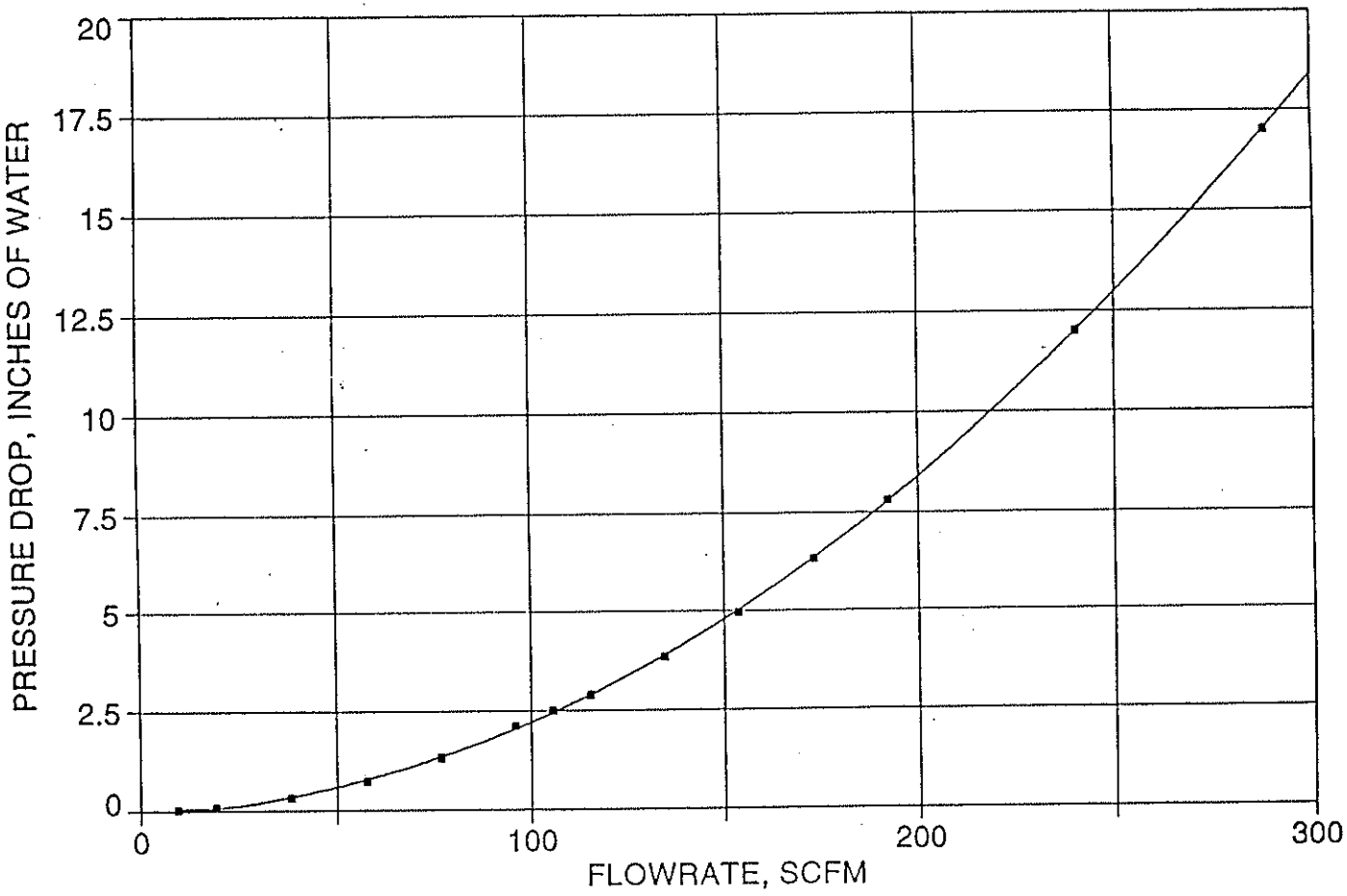
VELOCITY PRESSURE FOR 2" VERTICAL WELLHEAD
PRESSURE DROP, INCHES OF WATER
20
17.5
15
12.5
10
7.5
5
2.5
0
0
100
200
300
FLOWRATE, SCFM

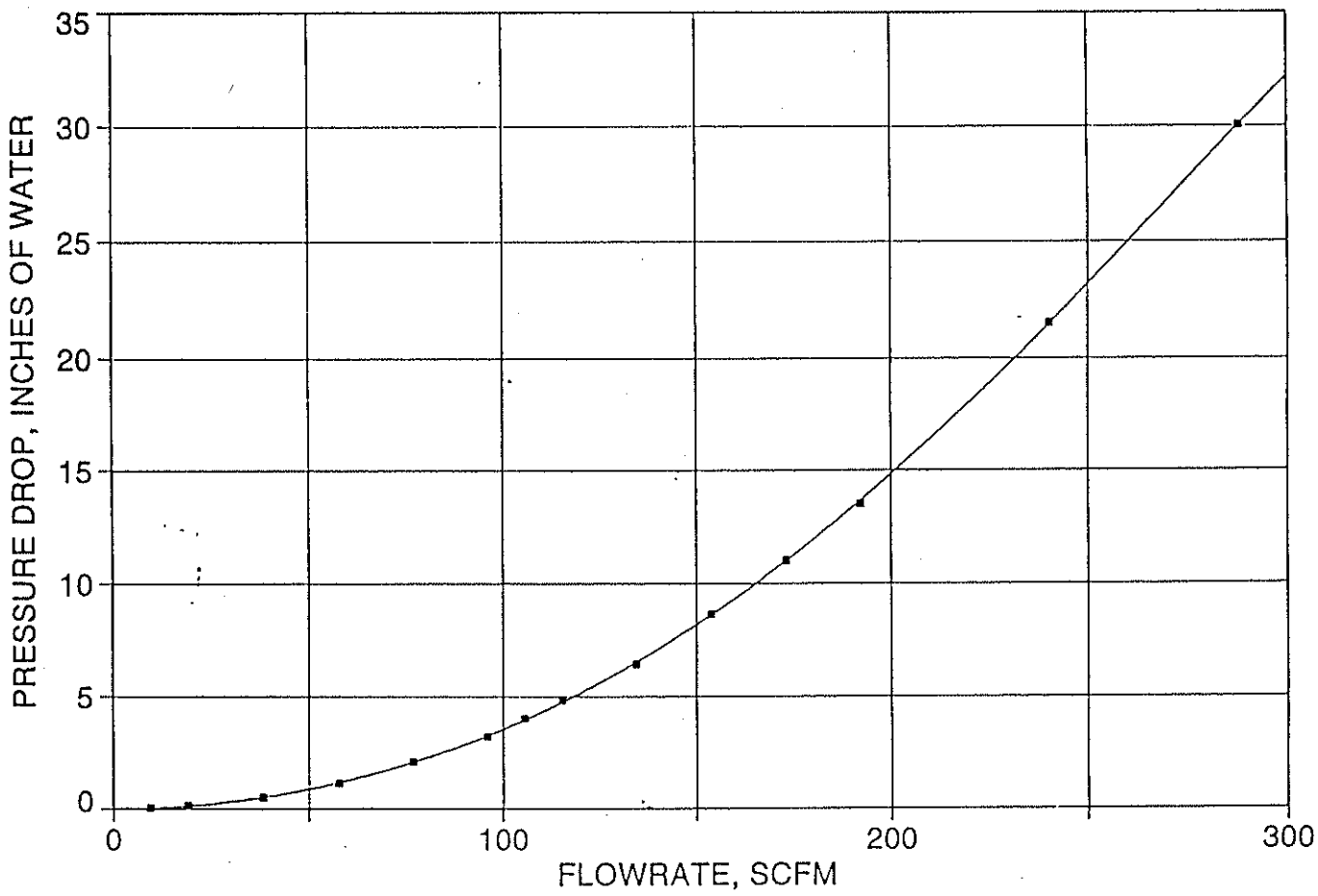
TOTAL PRESSURE DROP FOR 2" VERTICAL WELLHEAD
PRESSURE DROP, INCHES OF WATER
35
30
25
20
15
10
5
0
0
100
200
300
FLOWRATE, SCFM

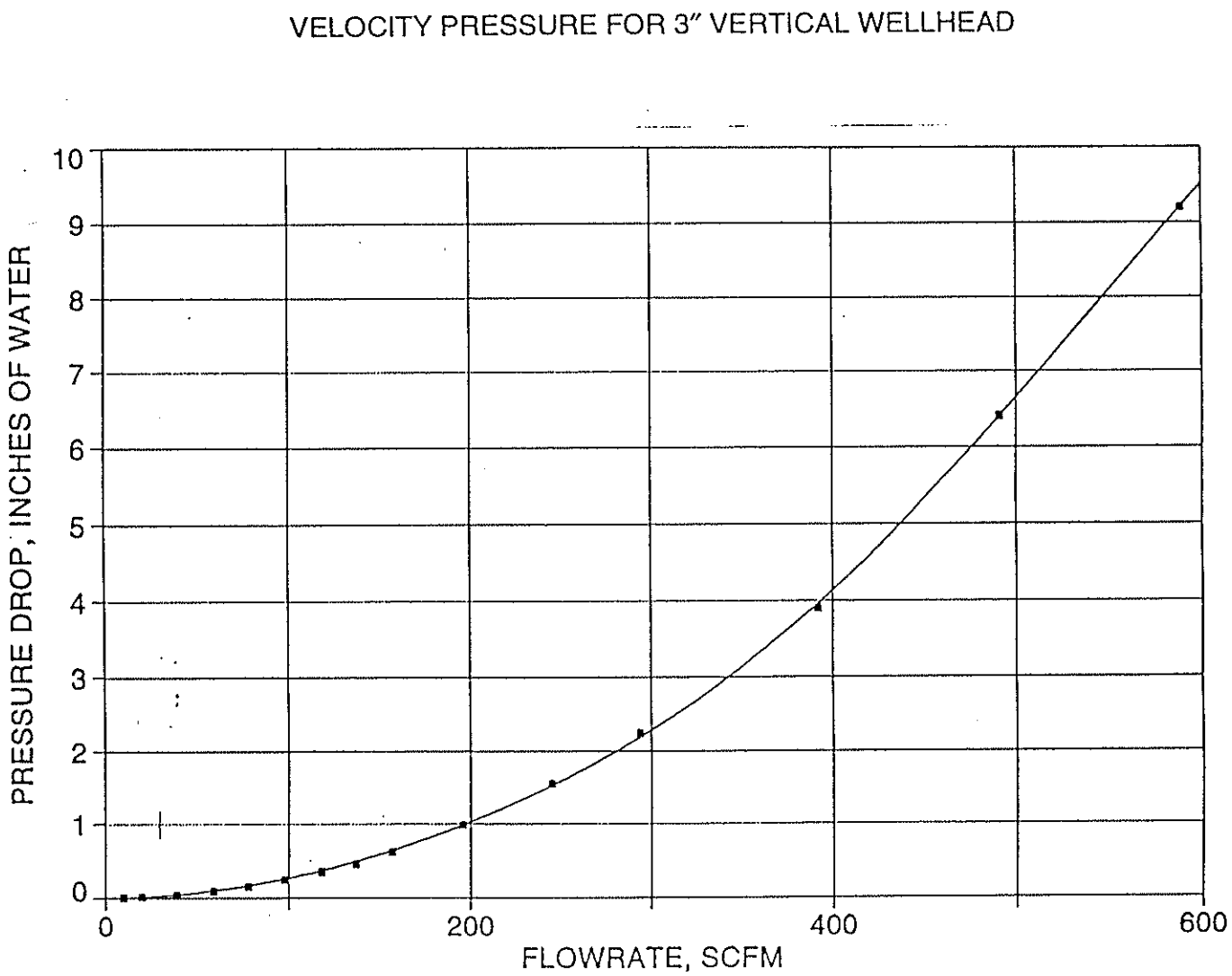
VELOCITY PRESSURE FOR 3" VERTICAL WELLHEAD
PRESSURE DROP, INCHES OF WATER
0
1
2
3
4
5
6
7
8
9
10
0
200
400
600
FLOWRATE, SCFM

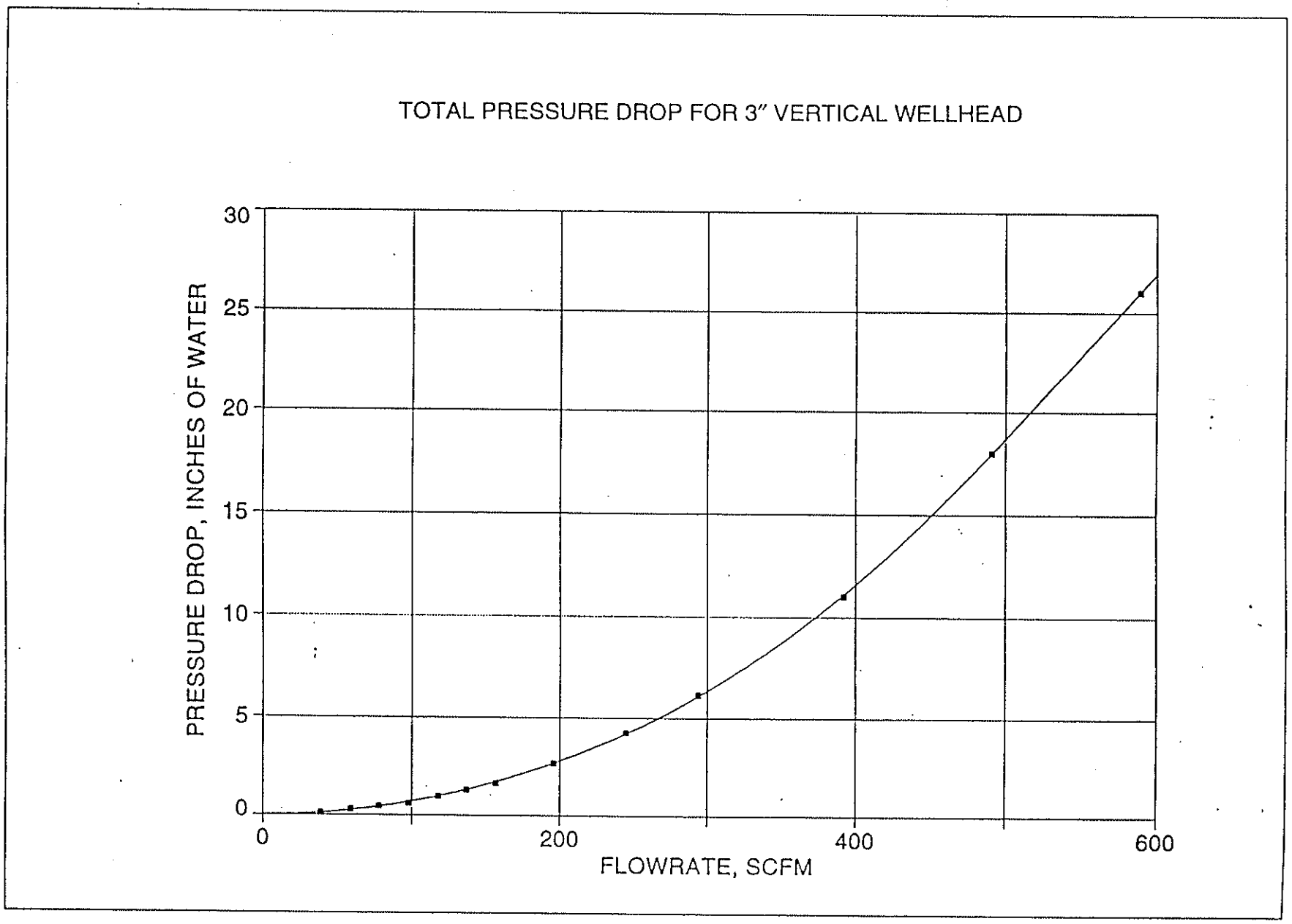
TOTAL PRESSURE DROP FOR 3" VERTICAL WELLHEAD
PRESSURE DROP, INCHES OF WATER
30
25
20
15
10
5
0
0
200
400
600
FLOWRATE, SCFM

VELOCITY PRESSURE FOR 1.5″ HORIZONTAL WELLHEAD

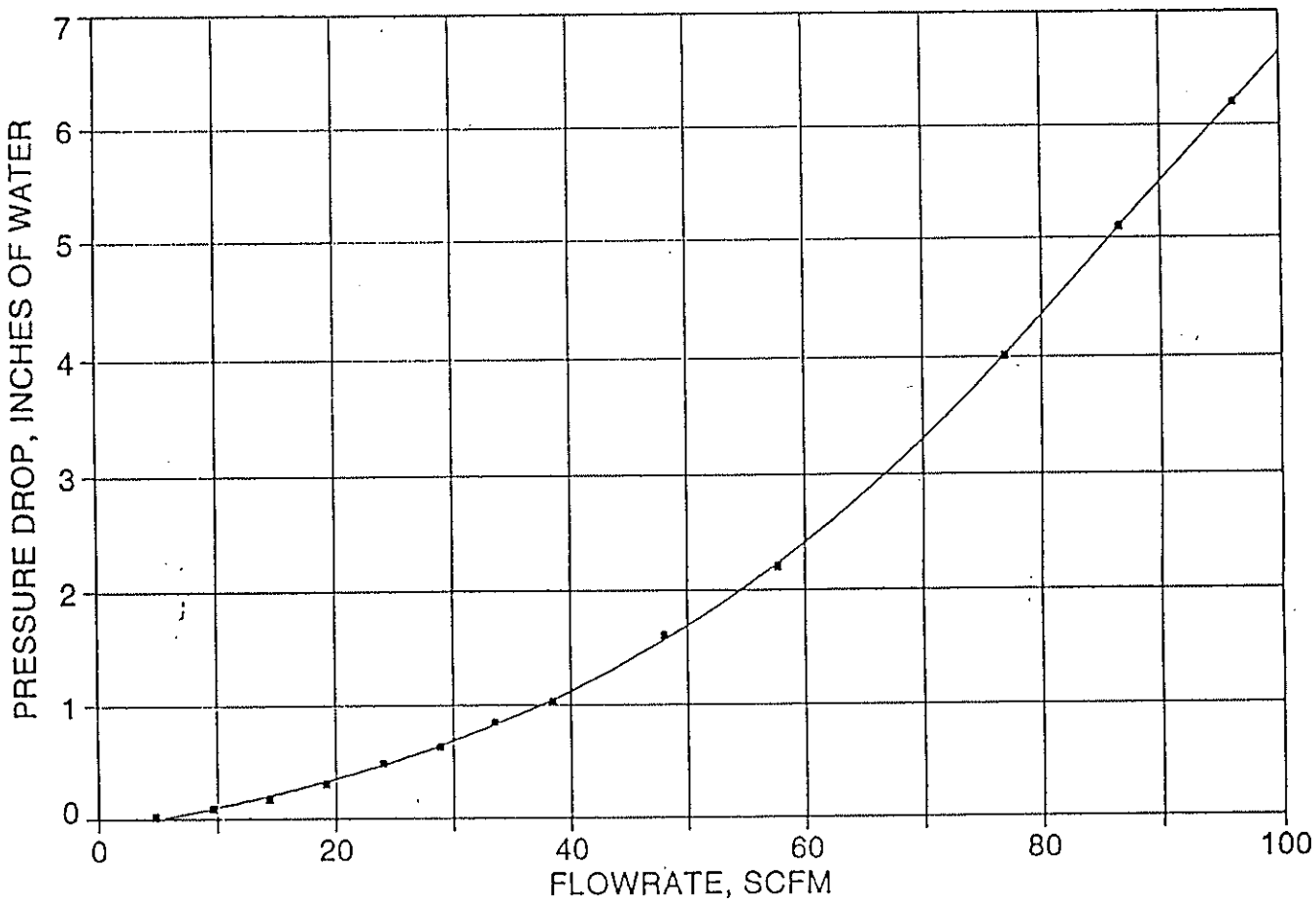

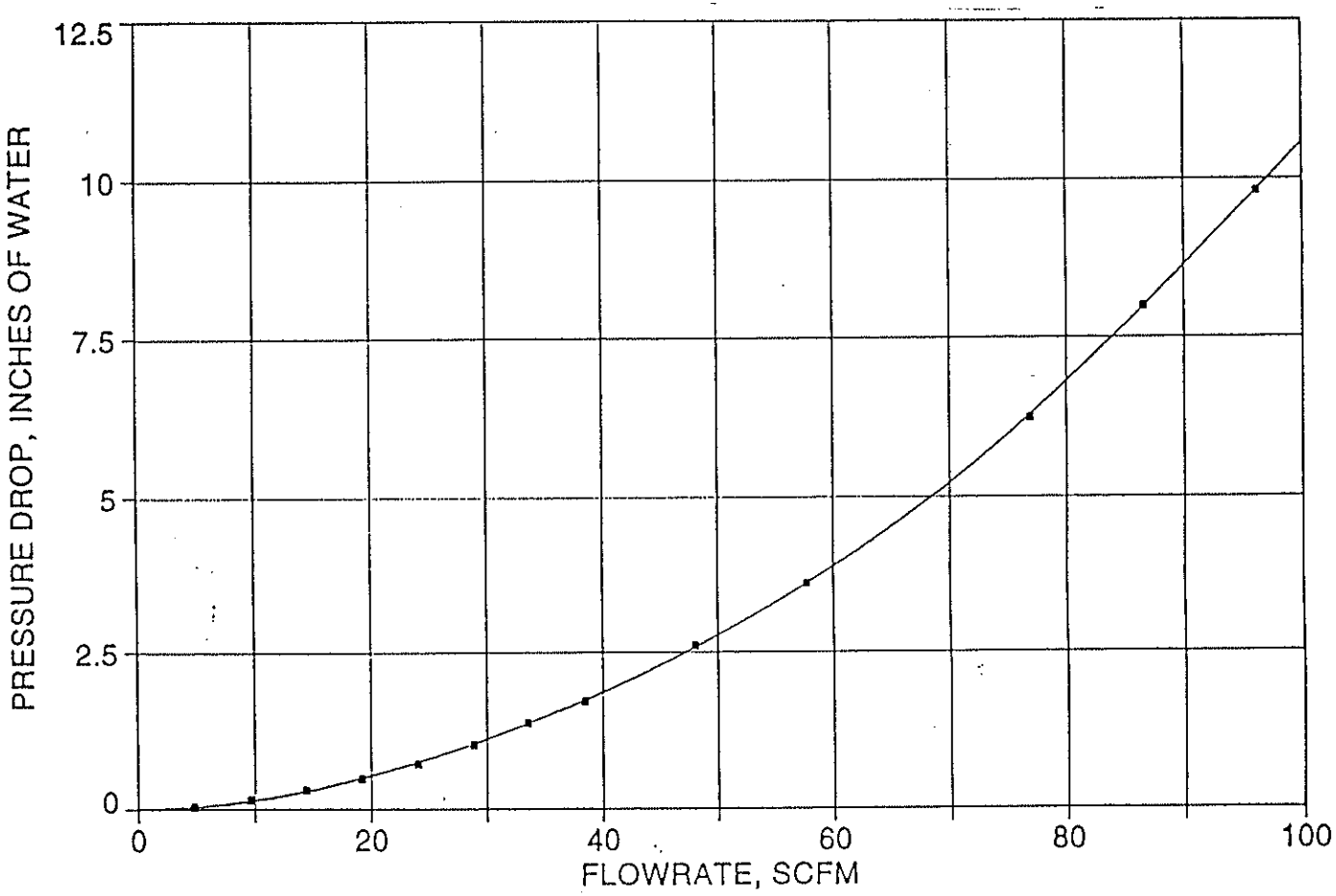
TOTAL PRESSURE DROP FOR 1.5" HORIZONTAL WELLHEAD
PRESSURE DROP, INCHES OF WATER
12.5
10
7.5
5
2.5
0
0
20
40
60
80
100
FLOWRATE, SCFM

VELOCITY PRESSURE FOR NEW 2″ HORIZONTAL WELLHEAD

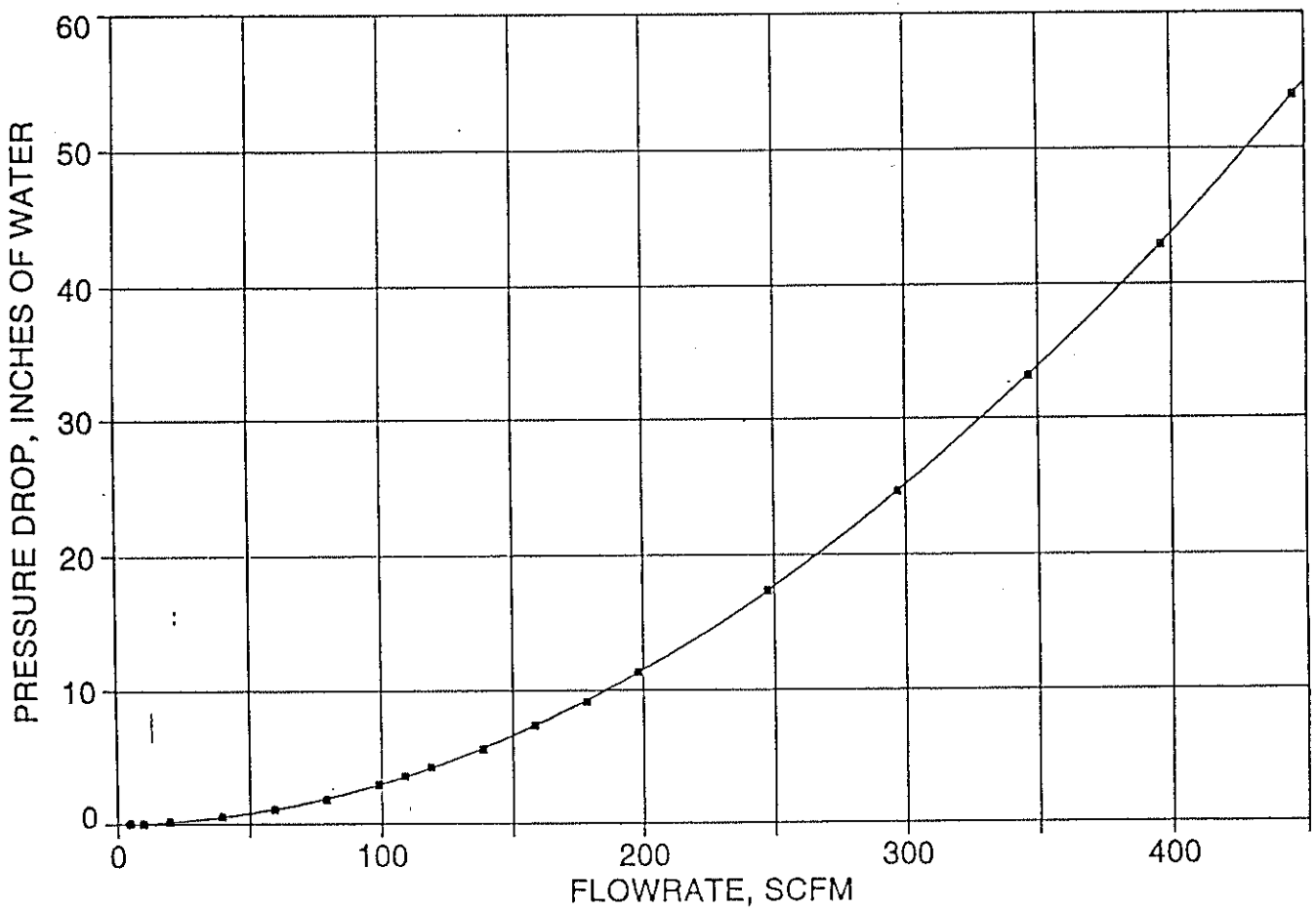

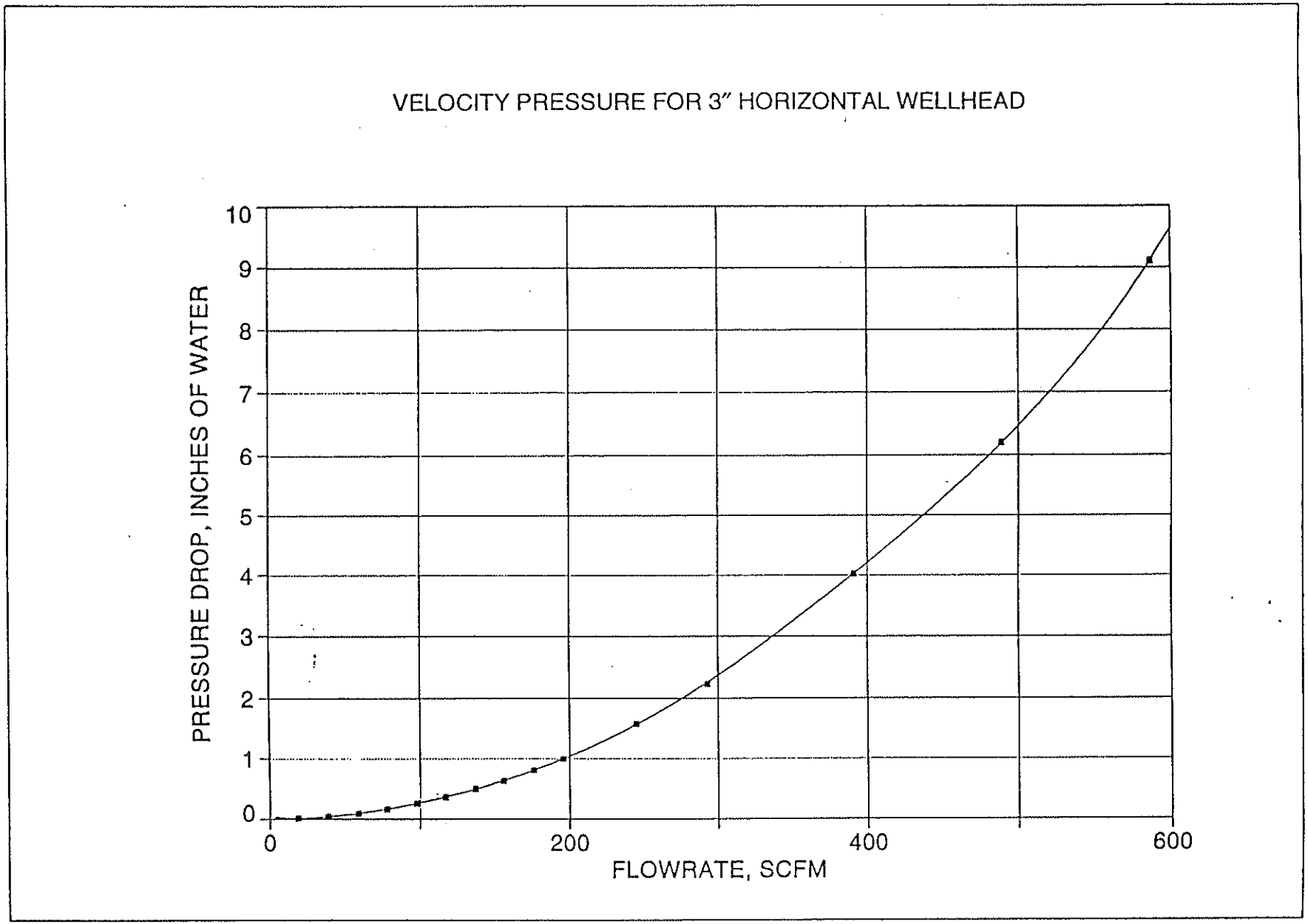
VELOCITY PRESSURE FOR 3" HORIZONTAL WELLHEAD
PRESSURE DROP, INCHES OF WATER
0
1
2
3
4
5
6
7
8
9
10
0
200
400
600
FLOWRATE, SCFM

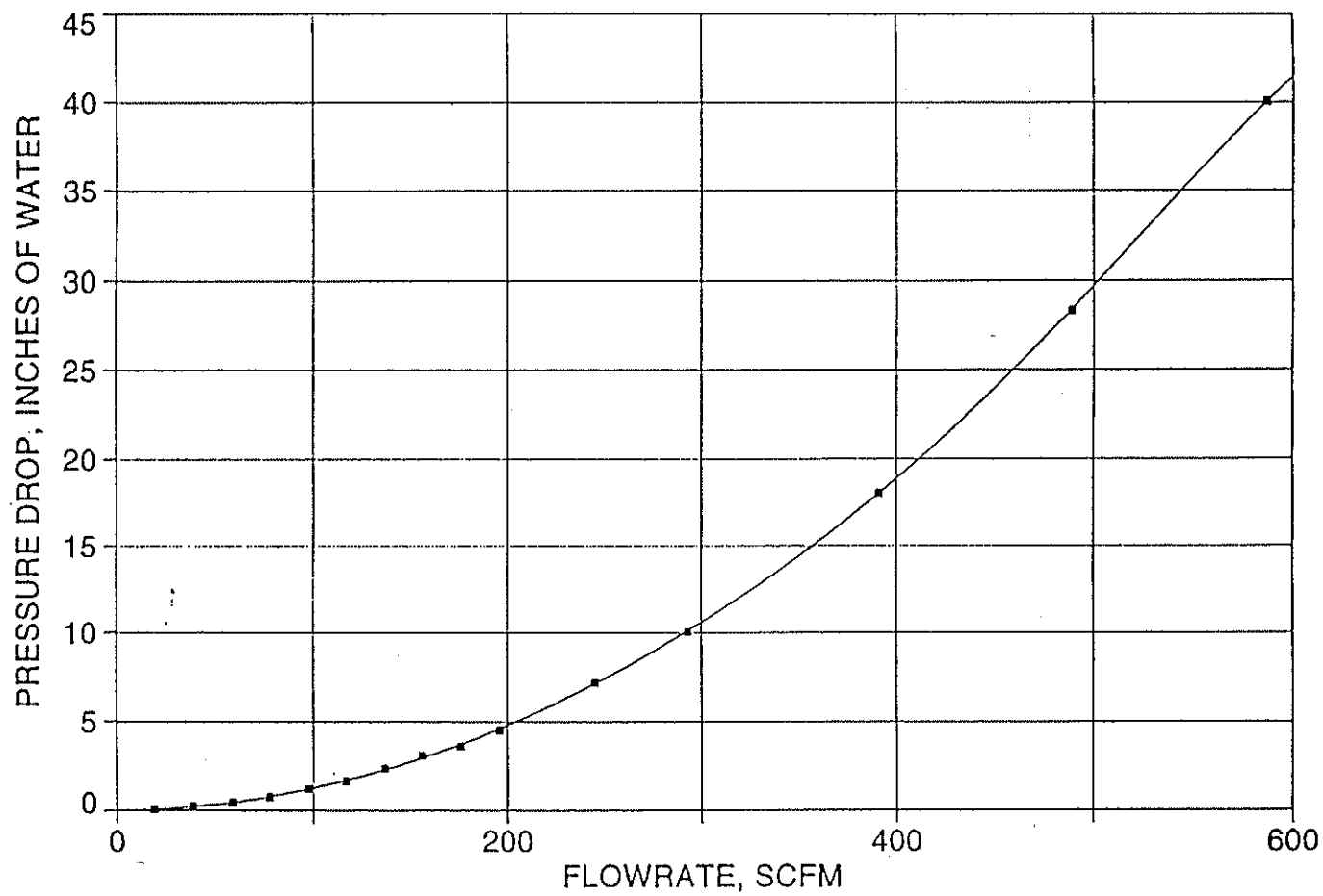
TOTAL PRESSURE DROP FOR 3" HORIZONTAL WELLHEAD
PRESSURE DROP, INCHES OF WATER
45
40
35
30
25
20
15
10
5
0
0
200
400
600
FLOWRATE, SCFM

Appendix E

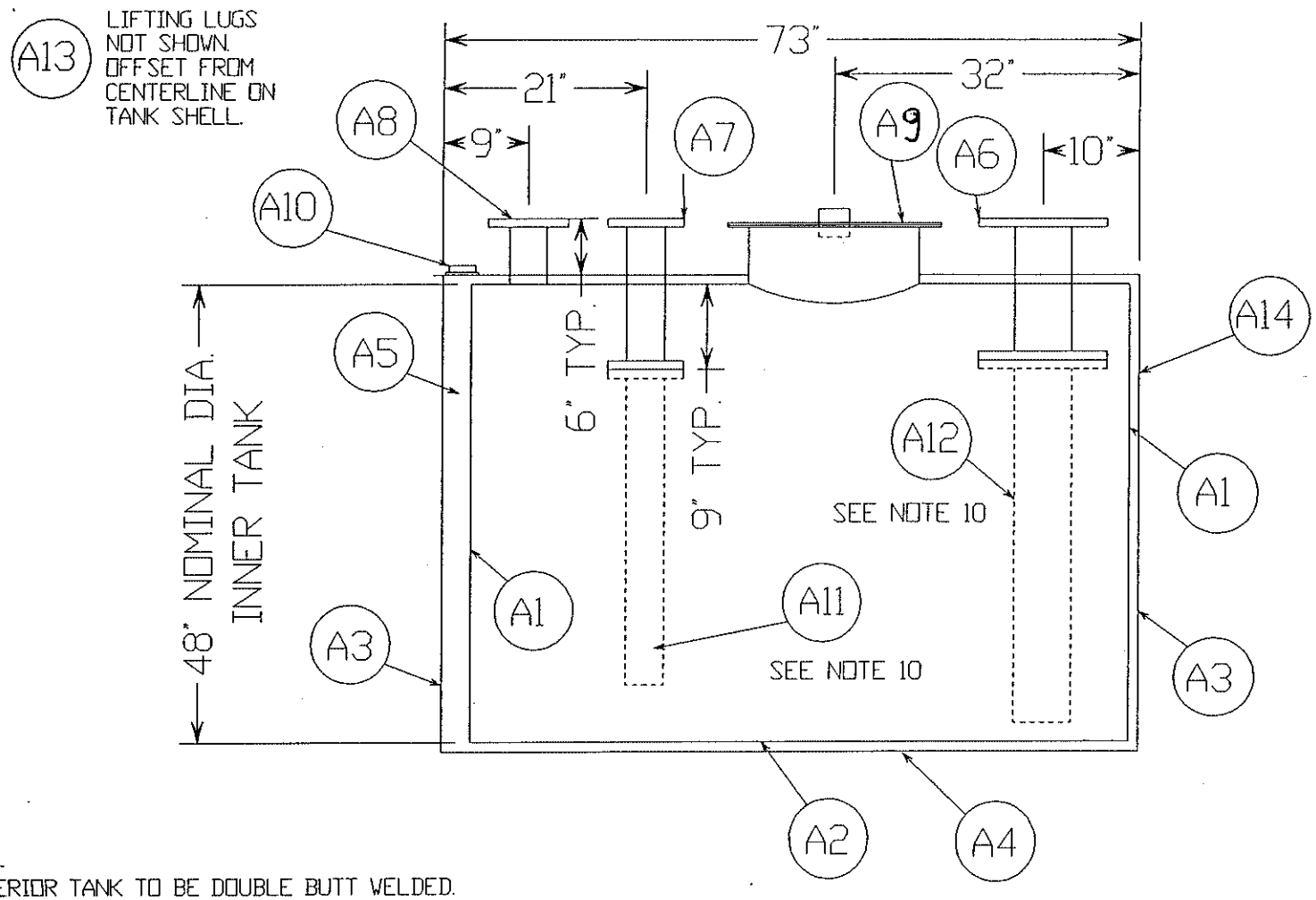

NOTES:

1. INTERIOR TANK TO BE DOUBLE BUTT WELDED.
2. NO ANODES REQUIRED.
3. ALL WELDS MUST BE LOW.
4. BACK GRIND SIDE SEAMS BEFORE WELDING.
5. ALL WELD SCARS AND "BB's" ARE TO BE REMOVED.
6. INTERIOR TO BE ABRASIVE BLASTED AND COATED WITH TNEMEC 61.
7. EXTERIOR TO BE ABRASIVE BLASTED AND FIBERGLASSED TO ACT-100 SPECIFICATIONS.
8. DESIGN PRESSURE IS ATMOSPHERIC.
9. DOUBLE WALL. TYPE 1. ACT-100 CONSTRUCTION.W
10. ITEMS A11 & A12. ALONG WITH ALL ASSOCIATED BOLTS & NUTS ARE TO BE PURCHASE AND INSTALLED BY LTC BEFORE SHIPMENT
11. AFTER COATING AFFIX STICKER LABEL: "USE ONLY NON-METALLIC PIPING".

REV.	DESCRIPTION	DATE	INIT.
B	REVISED FOR MANUFACTURABILITY	5/16/97	CEG
A	CHANGED A8 TO 4"	5/16/97	CEG

THIS DRAWING IS PROPERTY OF LANNON TANK CORP. AND MUST NOT BE COPIED, LOANED OR DISTRIBUTED WITHOUT WRITTEN PERMISSION. PROPRIETARY - NON FOIA RELEASEABLE

Lannon Tank
CORPORATION

TITLE: 550 GALLON LEACHATE TANK		DRN BY: CEG CHKD BY:
CUSTOMER: DAKOTA ENVIRONMENTAL	PO #:	DATE: 4/17/97
REF:	FILE: P-091GCD	SCALE: 1 : 18
DWG NO: P-091	SHEET: 1 OF 2	REV: B

BILL OF MATERIALS

ITEM NO.	QTY.	DESCRIPTION
A1	2	7 GA. THICK X 48" DIA. INNER HEADS
A2	1	7 GA. THICK INNER SHELL
A3	2	7 GA. THICK X 48 7/16" DIA. OUTER HEADS
A4	1	7 GA. THICK OUTER SHELL
A5	2	4"x5.4 CHANNEL SPACERS
A6	1	6"-150# DOUBLE FLANGED NOZZLE
A7	1	4"-150# DOUBLE FLANGED NOZZLE
A8	1	4"-150# SINGLE FLANGED NOZZLE
A9	1	18" MANWAY WITH 2" STAINLESS STEEL COUPLING IN COVER AND BOLTS. NUTS & GASKET
A10	1	2" THREADED WELD FLANGE
A11	1	4" PVC DROP PIPE W/150# FLANGE W/BOLTS & NUTS
A12	1	6" PVC DROP PIPE W/150# FLANGE W/BOLTS & NUTS
A13	2	LIFTING LUGS REQUIRED BUT NOT SHOWN (OFFSET FROM CENTERLINE ON TANK SHELL)
A14	1	SET OF UL. stl. AND ACT-100 LABELS

REV.	DESCRIPTION	DATE	INIT.
B	REVISED FOR MANUFACTURABILITY	5/17/97	CEG
A	CHANGED A8 TO 4	5/17/97	CEG

THIS DRAWING IS PROPERTY OF LANNON TANK CORP. AND MUST NOT BE COPIED, LOANED OR DISTRIBUTED WITHOUT WRITTEN PERMISSION. PROPRIETARY - NON FOIA RELEASEABLE

Lannon Tank
CORPORATION

TITLE: 550 GALLON LEACHATE TANK BILL OF MATERIALS		DRN BY: CEG
		CHKD BY: JG
CUSTOMER: DAKOTA ENVIRONMENTAL	P.O. #:	DATE: 4/17/97
REF:	FILE: P-092GCD	SCALE: NONE
DWG. NO: P-092	SHEET: 2 OF 2	REV: B

Appendix F

Milwaukee Metropolitan Sewerage District
260 West Seeboth Street
P.O. Box 3049
Milwaukee, Wisconsin 53201-3049
(414) 272-5100

RECEIVED
Milw. County Dept. of Public Works
OCT 2 2 1997
Environmental Services Div.

October 20, 1997

Mr. Lloyd J. Mlejnek, P.E. Project Engineer,
Courthouse Annex
907 North 10th Street
Milwaukee, WI 53233

RE: Franklin Landfill Condensate Removal

Dear Mr. Mlejnek:

The Milwaukee Metropolitan Sewerage District has reviewed your request to dispose of additional landfill gas pipe condensate at the Milwaukee County Landfill. The District understands that this condensate will be collected from the five new condensate tanks constructed as part of the site's gas remediation system. This condensate will be hauled to the exisiting sanitary sewer manhole #7 for disposal. The expected volumes are approximately 3000 gallons per removal event, three times a year.

Your request for the disposal of this condensate is hereby approved with the following conditions:

1. The County shall comply with all limits and conditions in permit 38.03
2. The District should be notified 48 hours prior to discharge.
3. Chemical analysis and volumes must be provided to the District each time the condensate tanks are discharged to the manhole. A composite sample of all six condensate tanks is acceptable for analysis.
4. The discharge should be sampled for the pollutants identified in sec. 1.02 of discharge permit 38.03. Sample results will be reviewed for two years, then the District will re-evaluate the sampling frequency.

If you have any questions, please contact Georgia Sinn at 225-2157.

Sincerely,

Joseph R. Grinker

Joseph Grinker, P.E.
Manager, Industrial Wastes

copied: Mick

Milwaukee Metropolitan Sewerage District
260 West Seeboth Street
P.O. Box 3049
Milwaukee, Wisconsin 53201-3049
(414) 272-5100

March 25, 1996

Mr. Lloyd J. Mlejnek, P.E.
Project Engineer, Department of Public Works
Courthouse Annex
907 North 10th Street
Milwaukee, WI 53233

Dear Mr. Mlejnek:

The Milwaukee Metropolitan Sewerage District has reviewed your request for disposal of approximately 550 gallons of gas collection pipe condensate into manhole # 7 at the Milwaukee County Landfill.

The District understands that disposal of pipe condensate will be required on a annual basis, with varying collection volumes depending on the season and weather.

Your request for disposal of this condensate into manhole #7 is hereby conditionally approved with the following conditions:

1. The County shall comply with all limits and conditions of Permit 38.02.

2. Disposal volumes should be in 500 gallon increments.

3. Because the County has only filled the 500 gallon holding tank once, the District should be notified 48 hours prior to the contents of the tank being discharged by calling Georgia Sinn at 225-2157.

4. Chemical analysis and volumes must be provided to the District each time the holding tank is discharged.

5. The discharge from the holding tank should be sampled for the pollutants indicated in sec. 1.02 of discharge permit 38.02. The first four discharges shall be sampled. When results are submitted, the District will review and re-evaluate the sampling frequency.

If you have any questions please contact Georgia Sinn at 225-2157.

Sincerely,

Bernadette D. Berdes, P.E.
Manager, Field Operations and Regulatory Compliance

cc: William Heinemann
WDNR/SED

BDB:GAS:sb/197a

Milwaukee Metropolitan Sewerage District
260 West Seeboth Street
P.O. Box 3049
Milwaukee, Wisconsin 53201-3049
(414) 272-5100

July 26, 1993

Mr. Carl Birks
Environmental Services
Courthouse Annex
907 North 10th Street
Milwaukee, WI 53233

Subject: Wastewater Discharge Permit, 38.02

Dear Mr Bircks:

Recently, you received a revised permit for your facility. That permit contains a mistake on page 6, sample types and analytical methods. Please replace that page with the inclosed page.

In my haste to complete all the permits in a timely basis, I copied the wrong list, grab samples instead of flow proportioned samples, into your permit rewrite.

I'm sorry for any inconvenience this may have caused you. If you have any questions, please call, 225-2157.

Sincerely,

Georgia Williamson

Georgia Williamson
Acting Sr. Industrial Waste Engineer

Milwaukee Metropolitan Sewerage District
260 West Seeboth Street
P.O. Box 3049
Milwaukee, Wisconsin 53201-3049
(414) 272-5100

June 25, 1993

CERTIFIED MAIL
RETURN RECEIPT REQUESTED

Mr. Carl W. Birks
Environmental Services
Courthouse Annex
907 North 10th Street
Milwaukee, WI 53233

Subject: Wastewater Discharge Permit 38.02

Dear Mr. Birks:

Wastewater Discharge Permit 38.02 is enclosed for Crystal Ridge Landfill, South 76th Street and Crystal Ridge Drive, Franklin. The permit authorizes this facility to discharge non-domestic wastewater to the sewerage system according to the pretreatment standards, monitoring requirements, and other conditions set forth in the permit.

The District first issued Permit 38.01 on December 30, 1991. Permit 38.02 which became effective on the date of signature on page 1 supersedes Permit 38.01. The federal categorical pretreatment standards have not changed since the permit which applies to your facility was originally issued in 1991. However, Ch. 11, MMSD Rules, was repealed and recreated by the District Commission on June 22, 1992. The new Rules became effective on July 1, 1992. In addition, the federal General Pretreatment Regulations, 40 CFR Part 403, have been amended since 1989. Your new permit incorporates the changes to Ch. 11, the Amendments to the federal regulations, and a revised more comprehensive format.

Please carefully review the limits that apply to your facility and your sampling and reporting requirements. In the future, the District will be giving increased attention to the completeness of your periodic compliance reports. Therefore, you should ensure that they include: the place, date, type and time of the sample; the names of the persons collecting the samples, the persons doing the analyses; the dates the analyses were performed; the analytical techniques used; and the analytical results. To facilitate an appropriate submission, the District has enclosed a reporting form that encompasses all requirements. Use of this form is not mandatory.

If you have questions regarding this permit, please contact Georgia Williamson at 225-2157. Thank you for your cooperation.

Sincerely,

Bernadette D. Berdes

Bernadette D. Berdes, P.E.
Manager of Field Operations and Regulatory Compliance

encl.

cc: WDNR/SED
File

BDB:GAW:sb/126a

WASTEWATER DISCHARGE PERMIT 38.02

The Milwaukee Metropolitan Sewerage District (District) has issued this wastewater discharge permit to:

Crystal Ridge Landfill
South 76th and Crystal Ridge
Franklin, Wisconsin 53132

This permit is issued according to sec. 66.902, Wis. Stats., and ch. 11, MMSD Rules. The Permittee shall comply with the pretreatment standards, monitoring requirements, and other conditions set forth in this permit.

Section 11.814, MMSD Rules, provides procedures for the administrative review of the conditions contained in this permit. These procedures are the exclusive means for the Permittee to seek amendments to this permit. The right to an administrative review of this permit expires 30 days after receiving this permit. Failure to exhaust these administrative review procedures may preclude judicial review. The Permittee must comply with this permit during the pendency in any forum of any challenge to this permit, according to sec. 11.815, MMSD Rules.

This permit becomes effective on the date of signature and expires at midnight, **December 31, 1996.** The Permittee may continue discharging after this date only if the District reissues this permit. The Permittee must apply for reissuance of this permit according to the requirements of sec. 11.305, MMSD Rules, at least 60 days before the expiration date of this permit.

Ralph Hollmon
Executive Director
Milwaukee Metropolitan Sewerage District

Dated this 16 day of JUNE, 1993.

WASTEWATER DISCHARGE PERMIT 38.02

CONTENTS

Page

Part 1 - Pretreatment Standards

1.01 Introduction.....3
1.02 Outfall 1.0 3

Part 2 - Sampling

2.01 Sampling frequency.....4
2.02 Representative samples.....4
2.03 Sample collection and analysis.....4

Part 3 - Reporting

3.01 Periodic compliance reports.....6
3.02 Report of violation and resampling.....7
3.03 Reporting of upsets, spills, other slugs, and emergencies.....7
3.04 Bypass reports.....8
3.05 NR 101 annual monitoring reports.....8
3.06 Notice of intent to change discharge.....8
3.07 Hazardous waste reports.....9
3.08 General certification.....9
3.09 Reporting address.....9

Part 4 - General Conditions

4.01 General prohibitions.....10
4.02 Prohibited discharges.....10
4.03 Prohibited pollutants.....12
4.04 Duty to mitigate.....12
4.05 Dilution prohibition.....12
4.06 Bypass prohibition.....12
4.07 Proper disposal of pretreatment sludges.....12
4.08 Compliance with all local, state, and federal requirements.....13
4.09 No property rights created.....13
4.10 Permit modification.....13
4.11 Permit transfer.....13
4.12 Monitoring location.....13
4.13 Monitoring facilities.....13
4.14 Record keeping requirements.....14
4.15 Review of proposed treatment facilities.....14
4.16 Additional reports.....15
4.17 Public information.....15
4.18 Right of entry.....15
4.19 Administrative review of District decisions.....15
4.20 Enforcement.....15

Part 1 - PRETREATMENT STANDARDS

1.01 INTRODUCTION

Discharges from the outfalls regulated by this permit are subject to the local limits established by the District in sec. 11.203, MMSD Rules. Based upon these requirements, the District has established the pretreatment standards set forth in sec. 1.02 of this permit.

1.02 OUTFALL 1.0

(1) Outfall 1.0 is the monitoring manhole downstream of the leachate addition point, located on the northside of the landfill site at the bottom of the hill adjacent to the sampling station building.

(2) The following pretreatment standards apply to discharges from Outfall 1.0:

Outfall 1.0
Applicable Local
Pretreatment Standards

Pollutant	Pretreatment Standards Maximum For Any One Day (mg/l)
Benzo(a)anthracene	0.062
BOD5	---
Cadmium, total	1.5
Copper, total	6.0
Cyanide, total	5.0
Lead, total	2.0
Mercury, total	0.0026
Methyl bromide	0.183
Methyl chloride	0.369
Nickel, total	4.0
Oil and Grease	300
Phenanthrene	0.051
Silver, total	5.8
Suspended solids	---
Total toxic organics	5.0
Zinc, total	8.0

(3) The pH of the Permittee's discharge shall be greater than 5.0 s.u. at all times.

(4) The Permittee may not discharge process wastewater other than to outfall 1.0.

Part 2 - SAMPLING

2.01 SAMPLING FREQUENCY

(1) The Permittee shall sample at outfall 1.0 at least once between January 1 and June 30 and at least once between July 1 and December 31 for the pollutants listed in sec. 1.02 of this permit. The volume of leachate shall be recorded on a daily basis.

(2) On a weekly basis, the leachate shall be analyzed for BOD_5, TSS, pH and oil and grease.

(3) On a monthly basis, the leachate shall be analyzed for those metals regulated under sec. 1.02 of this permit.

(4) A representative sample of the leachate shall be analyzed for priority pollutants once a year.

2.02 REPRESENTATIVE SAMPLES

The Permittee's self-monitoring shall represent production activities and discharges normally occurring during the reporting period.

2.03 SAMPLE COLLECTION AND ANALYSIS

(1) The Permittee shall collect and analyze samples using the following techniques:

(c) General certification

Periodic compliance reports shall contain the certification set forth in sec. 3.08.

(2) Signatory requirement

A person who satisfies the requirements of sec. 11.417, MMSD Rules, shall sign the periodic compliance reports.

(3) Reporting deadline

The Permittee shall submit sample results to the District no later than the last day of the month following the month in which the sample was collected.

3.02 REPORT OF VIOLATION AND RESAMPLING

If sampling performed by the Permittee identifies a violation of any applicable pretreatment standard or requirement, the Permittee shall:

(1) Notify the District within 24 hours of becoming aware of the violation,

(2) Provide a written report with sample results to the District within 5 days after becoming aware of the violation, and

(3) Repeat the sampling and analysis and submit the results of the repeat analysis to the District within 30 days after becoming aware of the violation.

(4) The reports required by subs. (2) and (3) shall contain the certification set forth in sec. 3.08 and be signed according to sec. 11.417, MMSD Rules.

3.03 REPORTING OF UPSETS, SPILLS, OTHER SLUGS, AND EMERGENCIES

(1) The Permittee shall immediately notify the District of an upset, spill, or other slug that has a reasonable potential to cause a violation of any pretreatment standard or requirement.

(2) The report required by sub. (1) shall include:

(a) The location, date, and time of the discharge;

(b) The character and volume of the discharged material; and

(c) Containment or other corrective action taken by the Permittee.

(3) Within 5 days after the report required by sub. (1), the Permittee shall submit to the District a written report describing the cause of the discharge, the duration of the discharge, and the measures taken by the Permittee to prevent similar occurrences in the future.

(4) The report required by sub. (3) shall contain the certification set forth in sec. 3.08 and be signed according to sec. 11.417, MMSD Rules.

(5) The Permittee shall immediately notify the District at 282-7200 (24 hours per day) of any emergency that may affect the sewerage system.

3.04 BYPASS REPORTS

(1) If the Permittee knows in advance of the need for a bypass, then the Permittee shall notify the District at least ten days before the bypass, if possible, or otherwise immediately.

(2) If the Permittee has a bypass that causes a violation of a pretreatment standard or requirement and the Permittee did not anticipate the bypass, then the Permittee shall:

(a) Orally notify the District of the bypass within 24 hours of becoming aware of the bypass, and

(b) Provide a written notification within 5 days after becoming aware of the bypass that describes:

1. The bypass and its cause;

2. The date and time of when the bypass began and the date and time of either the end of the bypass, if the bypass has ceased, or the expected end of the bypass, if the bypass has not ceased; and

3. The steps taken or planned to prevent reoccurrence of the bypass.

(3) The report required by sub. (2)(b) shall contain the certification set forth in sec. 3.08 and be signed according to sec. 11.417, MMSD Rules.

3.05 NR 101 ANNUAL MONITORING REPORTS

If the Permittee is required by the Department of Natural Resources to submit an NR 101 annual monitoring report, the Permittee shall provide a copy of this report to the District.

3.06 NOTICE OF INTENT TO CHANGE DISCHARGE

Before any activity that would either result in a 20 percent long-term increase or decrease in the volume of non-domestic wastewater discharged by the Permittee or that would significantly change the characteristics of the discharge, the Permittee shall submit a written Notice of Intent to the District.

3.07 HAZARDOUS WASTE REPORTS

The Permittee shall report discharges of hazardous waste according to sec. 11.412, MMSD Rules.

3.08 GENERAL CERTIFICATION

The reports required by this permit shall contain the following certification:

> *I certify under penalty of law that this document and all attachments were prepared under my direction or supervision in accordance with a system designed to assure that qualified personnel properly gather and evaluate the information submitted. Based on my inquiry of the person or persons who manage the system or those persons directly responsible for gathering the information, the information submitted is to the best of my knowledge and belief true, accurate, and complete. I am aware that there are significant penalties for submitting false information, including the possibility of fine and imprisonment for knowing violations.*

3.09 REPORTING ADDRESS

(1) All reports required by this permit shall be submitted to the District at the following address:

Milwaukee Metropolitan Sewerage District
Industrial Waste Department
P.O. Box 3049
Milwaukee, Wisconsin 53201-3049

(2) The Permittee may deliver reports directly to District Headquarters at 260 West Seeboth Street, Milwaukee.

Part 4 - GENERAL CONDITIONS

4.01 GENERAL PROHIBITIONS

(1) Compliance with rules

The Permittee may not discharge to the sewerage system except in compliance with ch. 11, MMSD Rules, and this permit.

(2) Interference

The Permittee may not discharge any pollutant to the sewerage system in a quantity or concentration that, alone or in conjunction with other discharges:

(a) Inhibits or disrupts the sewerage system or its sludge processes; and

(b) 1. Is a cause of a violation of the District's WPDES permits or air pollution control permits;

2. Increases the magnitude or duration of a violation;

3. Prevents the use or disposal of sewage sludge in compliance with any applicable local, state, or federal statutes, ordinances, regulations, permits, or other requirements; or

4. Inhibits the marketing of treated sewage sludge.

(3) Pass through

The Permittee may not discharge to the sewerage system any pollutant in a quantity or concentration that, alone or in conjunction with other discharges, is a cause of a discharge from the sewerage system to waters of the state that violates the District's WPDES permits or increases the magnitude or duration of a violation.

4.02 PROHIBITED DISCHARGES

The Permittee may not discharge to the sewerage system:

(1) Pollutants that create a fire or explosion hazard in the sewerage system, including but not limited to pollutants that result in wastewater with a closed cup flashpoint of less than 140 F or 60 C;

(2) Pollutants that will cause corrosive structural damage to the sewerage system, including but not limited to discharges with a pH lower than 5.0 s.u.;

4.07 PROPER DISPOSAL OF PRETREATMENT SLUDGES

The Permittee shall dispose sludges generated by wastewater treatment systems according to all applicable local, state, and federal requirements. If a sludge is a hazardous waste according to the criteria set forth in sec. NR 605, Wis. Admin. Code, then the Permittee shall satisfy the requirements of either secs. NR 610 or NR 615, Wis. Admin. Code.

4.08 COMPLIANCE WITH ALL LOCAL, STATE, AND FEDERAL REQUIREMENTS

The Permittee shall comply with all applicable pretreatment standards and requirements set forth in ch. 11, MMSD Rules, the Code of Federal Regulations, and the Wisconsin Administrative Code, regardless of their enumeration in this permit.

4.09 NO PROPERTY RIGHTS CREATED

This permit does not convey or create any private property rights.

4.10 PERMIT MODIFICATION

The District may modify this wastewater discharge permit at any time to reflect changes in federal, state, or local law, to incorporate the terms of an order, or to reflect changed circumstances.

4.11 PERMIT TRANSFER

This wastewater discharge permit is issued to the Permittee for specific processes and operations at a specific location. If any person is seeking to become an owner of the facility to which this permit applies or operator of the processes or operations to which this permit applies, then that person shall apply to the District for a transfer of this wastewater discharge permit before becoming an owner or operator. If an owner or operator changes without the prior approval of the District, then this permit is void.

4.12 MONITORING LOCATION

The Permittee may change monitoring locations only after receiving approval from the District. The District shall ensure that any change in the Permittee's monitoring location will not allow the Permittee to substitute dilution for adequate treatment.

4.13 MONITORING FACILITIES

(1) The Permittee shall provide monitoring facilities that will be accessible and that will provide representative samples of the process wastewater.

(2) The Permittee shall locate, construct, and maintain monitoring facilities according to the requirements of the District.

(3) The Permittee's monitoring facility shall have sufficient room to allow the installation of sampling and flow monitoring devices.

(4) The Permittee shall submit to the District plans and specifications for construction or modification of monitoring facilities at least 30 days before the proposed commencement of construction or modification. If the Permittee constructs or modifies monitoring facilities before District approval or without inspection during construction and the District determines that the monitoring facilities are unacceptable, then the Permittee shall reconstruct or modify the monitoring facilities according to the requirements of the District.

(5) The Permittee shall maintain monitoring facilities in a safe, operating condition at all times.

(6) The Permittee shall allow the District access to all monitoring facilities according to the requirements of sec. 4.18.

4.14 RECORD KEEPING REQUIREMENTS

The Permittee shall retain and preserve for no less than 5 years all records relating to monitoring, sampling, and analyses made by or on behalf of the Permittee. If a record pertains to matters that are the subject of an order, litigation, or other enforcement action, then the Permittee shall retain and preserve the record until all enforcement activities have concluded and all periods of limitations for appeals have expired. The Permittee shall make these records available to the District upon request for inspection and copying.

CDM Camp Dresser & McKee

environmental services

offices worldwide