GENERAL ELECTRICAL NOTES FOR SHEET E5

1/E5 PROVIDE FEDERAL SIGNAL CORPORATION MODEL #371DST, 120VAC, RED DOME. MOUNT ON ROOF. UNIT TO BE VISABLE FROM ENTIRE POOL AREA.

MAIN DISTRIBUTION PANEL/FEEDER SCHEDULE: MDP

MARK: MDP1				VOLTAGE RATING: 480Y/277V.		MAINS: 400A. MCB			
LOCATION: ELEC. RM				AMPERAGE RATING: 400A.		ENCLOSURE TYPE: I-LINE			
C/B	C/B COMPLEMENT			TO FEED	LOAD	CU FEEDER			MDP NOTE
	P	TRIP	AIC #			NO.	SIZE	CDT	
1	1	20	↑	SITE LIGHTS	3.3	2 1	10 10GND.	3/4	
2	1	20		SITE LIGHTS	2.9	2 1	10 10GND.	3/4	
3	3	15		UH-1 CHLORINE ROOM	5.0	3 1	12 12GND.	3/4	
4	3	15		UH-2 CHLORINE ROOM	5.0	3 1	12 12GND.	3/4	
5	1	20		UH-3 CHLORINE ROOM	2.6	2 1	12 12GND.	3/4	
6	3	15	25K-A FULLY RATED 65K-A SERIES RATED	EF-1 PUMP ROOM	1.2	3 1	12 12GND.	3/4	
7	3	100		FP-1 (50hp)	54	3 1	4 8GND.	1-1/4	
8	3	100		FP-2 (50hp)	54	3 1	4 8GND.	1-1/4	
9	3	70		FP-1 (25hp)	28	3 1	8 8GND.	1	
10	3	60		KRP-1 (20hp)	22.5	3 1	8 8GND.	1	
11	3	40		BSP-1 (15hp)	17.5	3 1	8 8GND.	1	
12	3	70		TSP-1 (25hp)	2.8	3 1	8 8GND.	1	
13	3	20	↓	T/1	10.9	3 1	12 8GND.	3/4	
	3	100		SPACE ONLY					
	3	100		SPACE ONLY					
	3	100		SPACE ONLY					

PANELBOARD SCHEDULE

MARK A		LOCATION ELEC. RM.
TYPE NQOD		ACC. GROUND BUS
ENCLOSURE SURFACE		ACC.
VOLTAGE 208Y/120V		AMPS. 100A.
INT. DUTY 10K A. MIN.		
MAINS 50A. MCB		

LOAD	Q	CODE	P	AMP.	CB	CB	AMP.	P	CODE	Q	LOAD
0.8	8	L	1	20	1	2	20	1	R	5	1.0
0.6	5	L	1	20	3	4	20	1	R	3	0.6
0.5	4	EXITS	1	20	5	6	20	1	PH-1	1	1.4
0.2	1	PRV-3	1	20	7	8	20	1	PH-2	1	1.4
0.2	1	PRV-4	1	20	9	10	20	1	CC-1	1	1.0
0.5	1	UH-4	1	20	11	12	20	1	CP-1	1	1.7
		SPR	1	20	13	14	20	1	STROBE	1	1.0
		SPR	1	20	15	16	20	1	EWS	1	0.1
		SPC			17	18	20	1	SPR		
		SPC			19	20	20	1	SPR		
		SPC			21	22	20	1	SPR		
		SPC			23	24			SPC		
		SPC			25	26			SPC		
		SPC			27	28			SPC		
		SPC			29	30			SPC		

ADD (1) 60 Ampere, 3 pole, circuit breaker to panel MDP1.

ADD (2) 100 Ampere, 3 pole, spaces only to panel MDP1.

ADD (1) 20 Ampere, 1 pole circuit breaker to panel A for "Irrigation Controller."

PROVIDE 20 Ampere, 120 volt, single phase circuit to irrigation controller. Refer to Sheet L7 for detailed requirements and additional work required by EC for irrigation system. 3

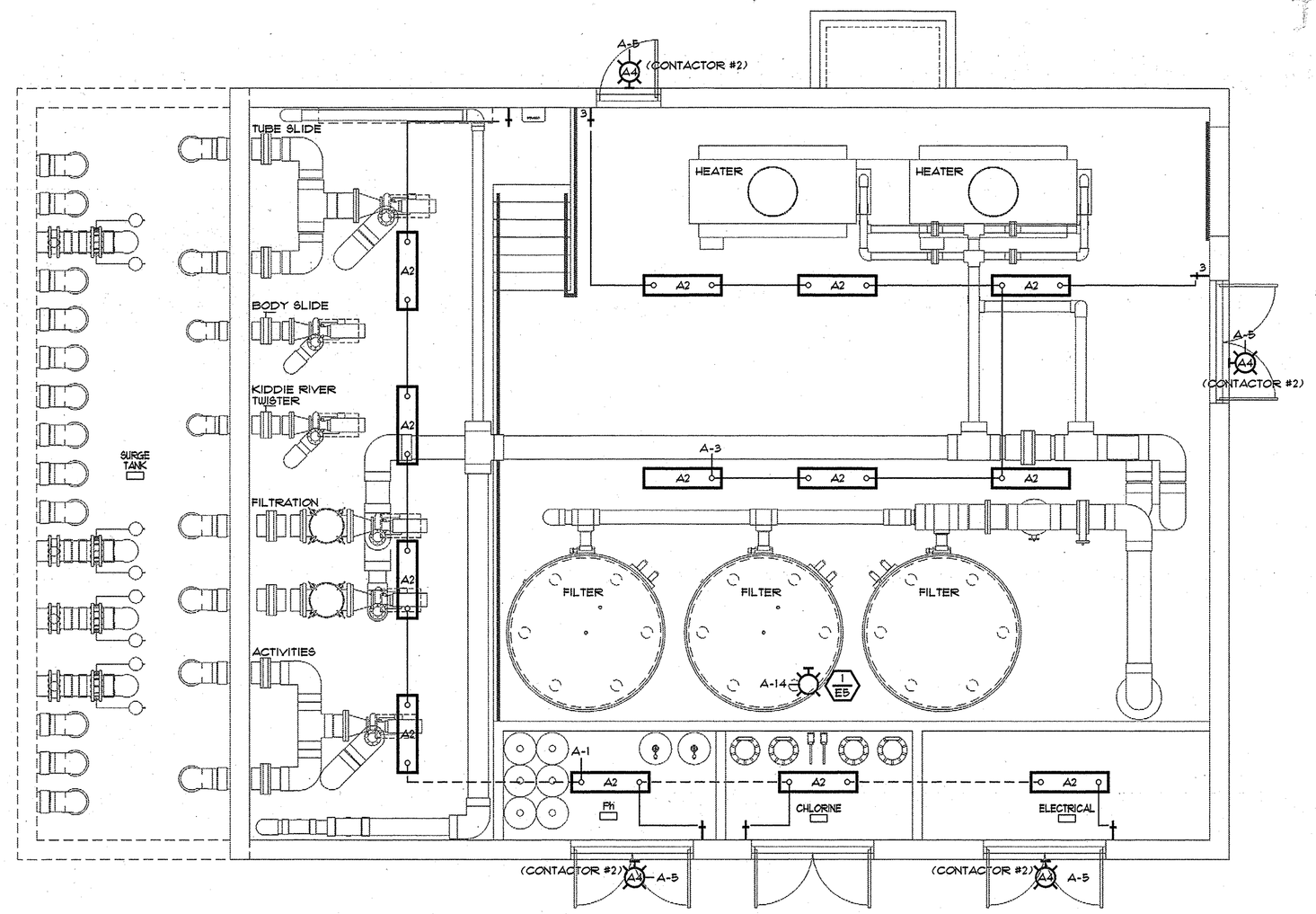

POOL MECHANICAL EQUIPMENT BUILDING LIGHTING PLAN

SCALE: 1/4" = 1'-0"

NORTH

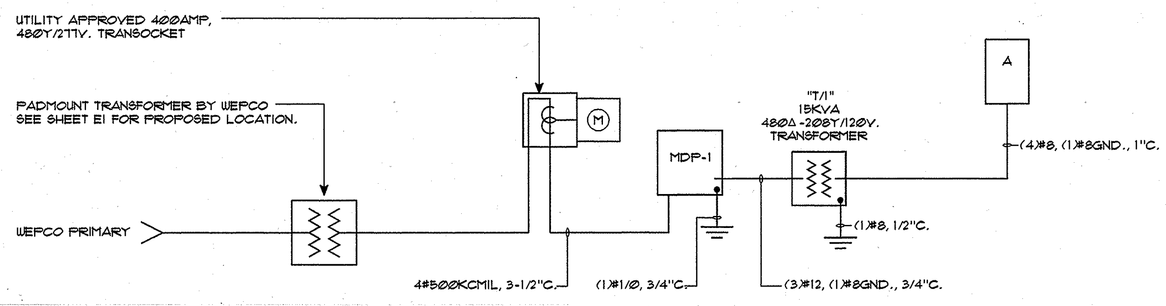

- SINGLE LINE DIAGRAM

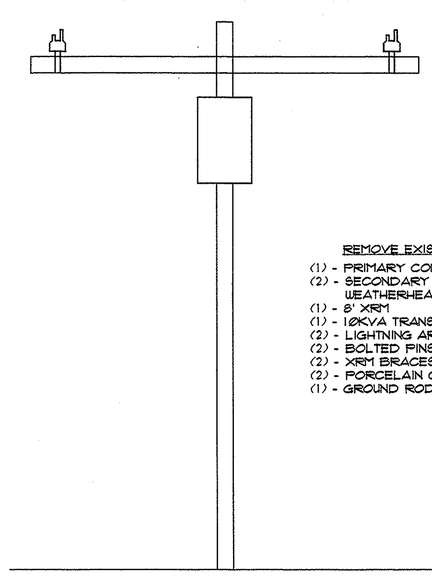

REMOVE EXISTING POLE

(1) - PRIMARY CONDUIT RISER
(2) - SECONDARY CONDUIT RISERS & WEATHERHEADS
(1) - 8' XRM
(1) - 10KVA TRANSFORMER *
(2) - LIGHTNING ARRESTORS
(2) - BOLTED PINS
(2) - XRM BRACES
(2) - PORCELAIN CUTOUTS
(1) - GROUND ROD & GROUND WIRE

* OIL FILLED TRANSFORMER

1/E5 ELECTRICAL DEMOLITION - NORTHEAST PICNIC SHELTER TRANSFORMER POLE

NOT TO SCALE

ADD 3-2. 3 01/29/96

LPI #5970

GREENFIELD AQUATIC CENTER
REFEED REMOTE ELECTRICAL SERVICES
E5

LEEDY AND PETZOLD, INC.
CONSULTING ELECTRICAL ENGINEERS/PLANNERS
345 N. 95th ST. MILWAUKEE, WISCONSIN 53226 - SUITE 150
PH. (414) 257-3355, FAX (414) 257-2700

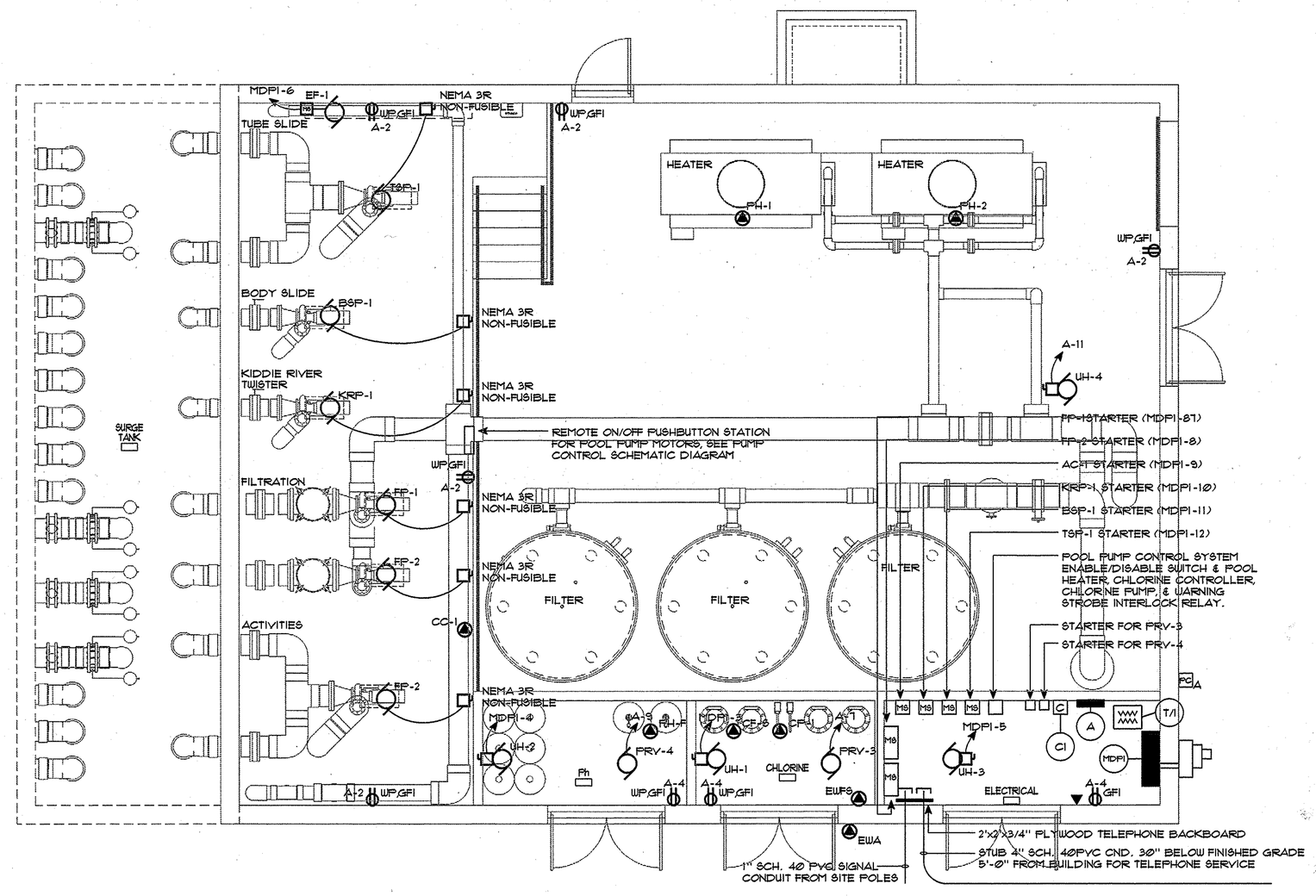

POOL MECHANICAL EQUIPMENT BUILDING POWER & SYSTEMS PLAN

SCALE: 1/4" = 1'-0"

NORTH

LPI #5970

LEEDY AND PETZOLD, INC.
CONSULTING ELECTRICAL ENGINEERS/PLANNERS
345 N. 95th ST. MILWAUKEE, WISCONSIN 53226 - SUITE 150
PH. (414) 257-3355, FAX (414) 257-2700

4/22/08

GRAEF ANHALT SCHLOEMER and Associates Inc.

345 North 95th Street
Milwaukee, Wisconsin 53226
414 259-1500
FAX 259-0037

Other Offices Located in:

Green Bay, Wisconsin
Madison, Wisconsin
Chicago, Illinois
Colorado Springs, Colorado

WATER TECHNOLOGY, INC.
Aquatic Designers and Engineers
Atlanta, GA • Barrer Des, WI • Cedar Rapids, IA
P.O. Box 894 / W26E4 Beaverland Parkway
Beaver Dam, Wisconsin 53916
Voice: 414-887-7373 Fax: 414-887-7090

©Copyright WATER TECHNOLOGY, INC. 1995

This Document and the ideas, renderings and other contents contain therein are the sole property of Water Technology, Inc. and may not be disseminated, copied, reproduced or otherwise used without prior written consent of Water Technology, Inc.

WTI PROJECT # 95023

PROJECT NAME:
GREENFIELD AQUATIC CENTER

SHEET TITLE:

NO.	DATE	REVISIONS	BY

PROJECT NUMBER:
DATE: JUNE 28, 1995
DRAWN BY: EDS
CHECKED BY: JJH
PROJECT MANAGER: JJH
FILE NAME: C:/ACAD/5970/5970E5

SHEET NUMBER

E5

13-A17-170 P-14-4-83