SCS ENGINEERS

Addendum to the Operation and Maintenance Manual

Doyne Park Landfill - Landfill Gas Migration Control System
FID No. 405020770; License No. 00426
Milwaukee County, Wisconsin

Prepared for:

Milwaukee County, Wisconsin

Department of Administrative Services

Architecture, Engineering and Environmental Services Section

633 West Wisconsin Avenue, Suite 1003
Milwaukee, Wisconsin 53203

Prepared by:

SCS ENGINEERS
N84 W13540 Leon Road
Menomonee Falls, Wisconsin 53051
(262) 345-1220

January 2015
File No. 25214038.00

Offices Nationwide
www.scsengineers.com

Addendum to the Operation and Maintenance Manual
Doyne Park Landfill – Landfill Gas Migration Control System
FID No. 405020770; License No. 00426
Milwaukee County, Wisconsin

Prepared for:

Milwaukee County, Wisconsin
Department of Administrative Services
Architecture, Engineering, and Environmental Services Section
633 West Wisconsin Avenue, Suite 1003
Milwaukee, Wisconsin 53203

Prepared by:

SCS ENGINEERS
N84 W13540 Leon Road
Menomonee Falls, Wisconsin 53051
(262) 345-1220

January 2015
File No. 25214038.00

Table of Contents

Section **Page**

1.0 Introduction and System Overview 1
2.0 New Components Installed 1
2.1 TECO 20 HP Electric Motor 1
2.2 Johnson Controls VSD Series Drive 1
2.2.1 VSD Operation 2
2.3 Intermatic Programmable Timer 3
2.4 Hobbs Meter 4
3.0 System Performance Monitoring 4
4.0 Maintenance 4
4.1.1 Blower Motor 4
4.1.2 Variable Speed Drive 4
4.1.3 Programmable Timer 5
4.1.4 Hobbs Meter 5
5.0 Contractor/Contact Information 6

Appendices

A Photograph Log
B Operation & Maintenance Manual for Three Phase Induction Motors – TECO-Westinghouse Motor Company
C VSD Series Drives – User Manual, November 2009
D Current VSD Settings
E Instruction Manual – Intermatic/Grasslin 50 Memories Time Switch
F Hobbs Meter Information
G Typical Monthly Site Inspection Form

Z:\Projects\25214038.00\Reports\2014\Adden to the Operation and Maintenance Manual\Doyne_Adden to OM Manual_Dec 2014.doc

1.0 INTRODUCTION AND SYSTEM OVERVIEW

This document was prepared as an addendum to the Operation and Maintenance (O&M) Manual for the Doyne Park Landfill – Landfill Gas Migration Control System (Earth Tech, January 2001) to provide information regarding the components that were replaced or upgraded in 2014. These modifications were implemented in response to a failure of the blower motor in December 2013, and prior failures of that component of the landfill gas control system.

The new system components, including a motor with increased horsepower, a variable speed drive (VSD) motor control, programmable timer, and run time meter are discussed below. Photographs of the components are included in **Appendix A**.

2.0 NEW COMPONENTS INSTALLED

The new components include:

- TECO 20 HP Electric Motor
- Johnson Controls VSD Series Drive
- Intermatic Programmable Timer
- Hobbs Meter

The remainder of the system is generally as described in the original 2001 O&M manual.

2.1 TECO 20 HP ELECTRIC MOTOR

In February 2014, personnel from Milwaukee Instruments and Terminal-Andrae installed a new electric motor and motor slide (i.e., mount) for the gas control system. Terminal-Andrae provided the electrical connections which included a temporary above ground conduit from the control panel to the motor. This was utilized because the wires in the existing underground conduit could not be removed – likely due to frozen water in the line. The new motor was a 20 horsepower (hp) explosion proof 3-phase inductor motor from TECO-Westinghouse Motor Company. The motor is completely enclosed and fan-cooled, and it drives the existing Aerovent blower. The motor includes sealed bearings and heaters to minimize condensation during periodic operation. The heaters were set to operate only when the motor was not running. The O&M Manual for Three Phase Induction Motors (TECO-Westinghouse Motor Company) is included in **Appendix B**.

2.2 JOHNSON CONTROLS VSD SERIES DRIVE

On July 15 and 16, 2014, personnel from Milwaukee Instruments and Terminal-Andre completed installation of a Johnson Controls enclosed Type 12 VSD. Milwaukee Instruments acquired the VSD, and Terminal-Andrae completed the electrical connections. New power wires were run in the underground conduit, which was now able to be utilized.

The VSD controls the speed and torque of the blower motor through the adjustment of the voltage and input frequency during operation. This ultimately allows a lower amperage draw during startup when the blower is turned on. A VSD also reduces the overall power usage for the same overall level of output, thus reducing operational costs.

The VSD was installed in a separate new control panel opposite the existing panel within the fenced area that also encloses the blower and motor. The components were removed from the existing panel, except for the panel heater and autodialer. Additional information related to the VSD is included in **Appendix C**. The current settings for the VSD are identified in **Appendix D**.

Access to the control panel of the VSD is restricted by padlocks. Changes to the operation of the VSD shall not be made without the consent of Milwaukee County and shall only be made by qualified personnel.

2.2.1 VSD Operation

As in the past, the system design includes operation of the blower (i.e., active operation) during specific periods of the day. The periods are set using a timer. This mode of operation is considered automatic (i.e., auto) in that it runs for the same time periods each day.

Operation or shut down of the gas extraction system may need to occur outside or during the programmed mode of operation discussed above. Manual changes to the operation of the gas extraction system must only occur with the consent of Milwaukee County and must be completed by qualified personnel only. The gas extraction system can generally be operated in three modes (bypass, hand, and auto). A description of each mode and the procedure to operate the blower in that mode are discussed below.

System Bypass Mode

Operating the VSD in “Bypass” mode will start and stop the blower motor without the VSD. System operation without the use of the VSD is not recommended and will cause a large amp draw (i.e., as high as 200 amps) during startup that could damage the motor. If the “ready” light on the display panel is flashing, the blower is in bypass mode. Press the “stop” button and set blower operation to “auto” or “hand” as discussed below.

Auto Mode Operation

The suggested mode of operation for the gas extraction system is in auto (automatic) mode. In auto mode the VSD is used in conjunction with a remote programmable timer. When set in this mode, the timer starts the VSD that controls the speed and torque of the motor through the adjustment of the voltage and input frequency during motor startup. To operate the blower in auto mode, the following procedure should be followed:

1) Press the “Stop” button to make sure the motor is not operating in another mode.

2) Press the "HOA" button to cycle through the different modes of operation. HOA refers to hand, off, and auto. The current operational mode is displayed flashing above the words "Output Frequency" on the display panel.

3) When in the auto mode of operation press the "Start" button. The green ready light should be on and the system is now in the auto operational mode. The blower will start based on the cycle frequency set in the programmable timer (i.e., currently set at a 4-hour period/day from 11 p.m. to 3 a.m.).

4) To stop the blower, simply press the "Stop" button.

Hand Mode Operation

In hand mode, the user controls the operation of the VSD (i.e., the programmable timer is bypassed). When operated in this mode, the user starts the VSD and controls the speed and torque of the motor through the adjustment of the input frequency during motor startup. This mode of operation should be used to test the operation of the blower, or during routine testing of the headers or wellfield. To operate the blower in hand mode, the following procedure should be followed:

1) Press the "Stop" button to make sure the motor is not operating in another mode.

2) Press the "HOA" button to cycle through the different modes of operation. HOA refers to hand, off, and auto. The current operational mode is displayed above the words "Output Frequency" on the display panel.

3) When in the hand mode of operation, press the "Start" button. The green ready light should be on indicating the system is now in the hand operational mode.

4) The user starts the blower motor by increasing the frequency (shown in hertz [Hz]) of the motor by pressing the "+" button. The user gradually increases the frequency, thus increasing the speed of the blower, by continually pressing the "+" button. When the user reaches the desired blower speed, the "+" button is no longer pressed. Similarly, to decrease the speed of the blower the user would decrease the output frequency by pressing the "-" button. The blower should not be operated over an output frequency of 60 Hz.

5) To stop the blower, press the "Stop" button. The user can also press the "-" button until the output frequency is at zero.

6) Return the system to automatic operation as warranted (see instructions above).

2.3 INTERMATIC PROGRAMMABLE TIMER

On July 16, 2014, Milwaukee Instruments installed a new Intermatic/Grasslin programmable timer (Model FM1D50A-120) in the new VSD control panel. The programmable timer is used in conjunction with the VSD to automatically start and stop the operation of the blower motor.

The timer was set to turn the blower on once per day for a 4-hour period of time (i.e., 11 p.m. to 3 a.m.). Procedures to change the timer settings are described in the instruction manual included in **Appendix E**. Changes to the blower operation or programmable timer shall not be made without the consent of Milwaukee County and shall only be made by qualified personnel.

2.4 HOBBS METER

A Hobbs meter was also installed by Milwaukee Instruments in the new VSD control panel to verify system operation. The meter measures elapsed run time for the blower, thus periodic readings should be consistent with the run times set on the timer. Anomalies may indicate a problem with system operation.

Information regarding the Hobbs meter is included in **Appendix F**.

3.0 SYSTEM PERFORMANCE MONITORING

Although the new components are expected to improve the performance and reliability of the gas control system, the modifications described herein do not materially change the design or current operating principles of that system. Periodic monitoring will continue during the routine monthly site visits to assess the performance of the new system components. Periodic checks of run time from the Hobbs meter will verify system operation. Adjustments to the operation of the system are expected to occur based on monthly observations and data from quarterly field measurement (i.e., gas well and gas probe readings). As described above, changes to the blower operation or programmable timer shall not be made without the consent of Milwaukee County and shall only be made by qualified personnel.

The results of the monthly inspections will be documented on a form similar to that in **Appendix G**.

4.0 MAINTENANCE

4.1.1 Blower Motor

Maintenance on the Aerovent blower shall be performed in accordance with the January 2001 Operation and Maintenance Manual for the Doyne Park Landfill. Maintenance of the replacement electric motor for the blower will be performed in accordance with the O&M Manual for Three Phase Induction Motors developed by TECO-Westinghouse Motor Company in **Appendix B**. General inspection of the motor shall be performed during routine monthly site visits. As the motor has sealed bearings, periodic lubrication is not necessary. Any maintenance activities shall be completed by qualified personnel. Only qualified personnel having full knowledge are authorized to perform maintenance activities on this motor.

4.1.2 Variable Speed Drive

Maintenance on the VSD shall be performed in accordance with User Manual for the VSD Series Drives dated November 2009 (**Appendix C**). The VSD will be inspected during routine monthly

site visits. Any maintenance activities shall be completed by qualified personnel. Only qualified personnel having full knowledge are authorized to perform maintenance activities on the VSD.

4.1.3 Programmable Timer

The programmable timer will be maintained in accordance with the information in the manual for the unit included in **Appendix E**. The timer uses an AC power source from the VSD. A lithium battery provides minimum 3-year date and time protection. The operation of the timer is verified through periodic readings from the Hobbs meter described below.

Procedures to change the timer settings are described in the operation manual included in **Appendix E**. Changes to the blower operation or programmable timer shall not be made without the consent of Milwaukee County and shall only be made by qualified personnel.

4.1.4 Hobbs Meter

The Hobbs meter is wired into the power for the blower motor to record the hours of operation. No maintenance is required on the meter. If the unit ceases to function, it will need to be replaced by qualified personnel.

5.0 CONTRACTOR/CONTACT INFORMATION

Site Owner and Operator

Milwaukee County DAS-FM
Architecture, Engineering and Environmental Services
633 West Wisconsin Avenue, Suite 1003
Milwaukee, Wisconsin 53203
Contact: Sean Hayes
Phone: 414-278-4891

Design and Construction Oversight

SCS Engineers
N84 W13540 Leon Road
Menomonee Falls, Wisconsin 53051
Contact: Mike Prattke
Phone: 262-345-1220

Instrumentation and System Control

Milwaukee Instruments, Inc.
N95 W16975 Richfield Way, Suite 8
Menomonee Falls, Wisconsin 53051
Contact: Mike Snyder
Phone: 414-750-6889

Electrical

Terminal-Andrae, Inc.
2110 West Clybourn Street
Milwaukee, Wisconsin 53233
Contact: Todd Pfeiffer
Phone: 414-933-6970

APPENDIX A

Photograph Log

Doyne Park Landfill – Landfill Gas Migration Control System
Milwaukee County, Wisconsin
SCS Engineers Project #25214038

Photo 1: Photograph showing the fenced area that contains the blower, blower motor, and control panels associated with the landfill gas migration control system.

Photo 2: Photograph of the new TECO motor (blue) connected to the blower.

Photo 3: The interior of the former blower control panel after relocation of several components to the new variable speed drive (VSD) panel which was installed on the opposite side.

Photo 4: Photograph showing the new VSD panel and hour meter. The VSD user interface screen is accessed by panel door (shown). Panel doors are secured by padlocks.

Photo 5: Photograph showing the digital readout of the VSD user interface screen. Note the word "Auto" is displayed above "Output Frequency" indicating the VSD is in auto operational mode.

Photo 6: Photograph showing the interior of the new VSD control panel.

Photo 7: Photograph showing the programmable timer and drive isolation switch mounted to the interior of the door of the VSD control panel. The switch will interrupt power to the VSD, so that the VSD does not start the motor.

APPENDIX B

Operation & Maintenance Manual for Three Phase Induction Motors – TECO-Westinghouse Motor Company

OPERATION

&

MAINTENANCE MANUAL FOR THREE PHASE INDUCTION MOTORS

TECO-Westinghouse Motor Company
5100 North IH-35
Round Rock, Tx. 78681

INDEX PAGE

1. INTRODUCTION……. 1
2. ACCEPTING, INSPECTION, STORAGE, TRANSPORTATION…… 2
3. INSTALLATION…….. 4
   3.1 Site and environment for motor installation…….. 4
   3.2 Foundation…….. 4
   3.3 Installation of shaft coupling…….. 6
   3.4 Installation of belt drive…… 9
   3.5 Conveyance with chain or gear……. 10
   3.6 Electrical connections……. 11
4. OPERATION…… 12
   4.1 Examination before starting…… 12
   4.2 Starting operation…….. 15
5. MAINTENANCE…….. 17
   5.1 Major points in regular inspection and maintenance…….. 17
   5.2 Motor windings……... 18
   5.3 Cleaning of the interior of the motor…… 18
   5.4 Cleaning of the exterior of the motor……... 19
   5.5 Maintenance of anti-friction bearings…….. 19
      5.5.1 Frequency of re-lubrication…….. 19
      5.5.2 Kinds of grease…… 20
      5.5.3 Grease quantity…… 20
      5.5.4 Re-greasing…….. 20
      5.5.5 Oil re-lubrication……. 22
      5.5.6 Cleaning and installation of bearings…… 23
   5.6 Maintenance of sleeve bearings…… 24
      5.6.1 Daily inspection……... 24
      5.6.2 Regular examination…….. 24
      5.6.3 Disassembly……. 25
      5.6.4 Re-assembly……. 26
   5.7 Maintenance of slip rings (for Wound Rotor only)…… 27
   5.8 Maintenance of non-reverse ratchet mechanism (Vertical Motors only) 29
6. FAULT FINDING AND RECOGNITION…….. 31

1. INTRODUCTION

This and the following instruction address the more common situations encountered in motor installation, operation and maintenance. For the TWMC motor warranty to be and to remain in effect, the motor must be installed and operated in strict accordance with the outline drawing, motor nameplates and these instructions and must not be altered or modified in any unauthorized manner.

During the installation and operation of motors in heavy industrial applications there is a danger of live electrical parts and rotating parts. Therefore to prevent injury and/or damage the basic planning work for installation, transportation, assembly, operation, etc... needs to be done and checked by authorized and competent personnel only.

Since these instructions cannot cover every eventuality of installation, operation and maintenance, the following points should be considered and checked.

- The technical data and information on permissible use such as assembly, connection, ambient and operating conditions given in the related catalogue, operating instructions, nameplates and other production documentation.
- The general erection and safety regulations.
- The local and plant-specific specifications and requirements.
- The proper use of transport, lifting devices and tools.
- The use of personal protective equipment.

Following indications should be observed when reading these instructions.

Safety instructions are marked as follows:

Warning of electric hazards for personnel.

Warning of dangers for personnel.

ATTENTION!
Warning of damage for the motor or installation.

2. ACCEPTING, INSPECTION, STORAGE, TRANSPORTATION

Inspection upon receipt
Check to following points upon receipt:

- Are the nameplate ratings identical with what you ordered?
- Are dimensions and color in compliance with your specifications?
- Are the nameplate ratings for space heater, thermal protector, temperature detector, etc. identical with what you ordered?
- Is there any damage?
- Are all accessories and accompanying instruction manuals in good order?
- Please ensure that the arrow head indicator really indicates direction of rotation.
- If there are any specific requirements, please ensure they are in conformity with your specifications.

2.1 Storage
When motors are not in operation, the following precautionary measures should be undertaken to assure best performance.

2.2 Place
(a) High and dry, well ventilated without direct sun, dust or corrosive gas.
(b) Not located near to a boiler or freezer.
(c) Entirely free form vibration and easy for movements.
(d) Motors should be put on pallets to prevent moisture.

2.3 Moisture prevention
Since moisture can be very detrimental to electrical components, the motor temperature should be maintained about 3ºC above the dew point temperature by providing either external or internal heat. If the motor is equipped with space heaters, they should be energized at the voltage shown by the space heater nameplate attached to the motor. Incandescent light bulbs can be placed within the motor to provide heat. However, if used, they must not be allowed to come in contact with any parts of the motor because of the concentrated hot spot that could result.

2.4
Even during storage, the insulation resistance should be kept above the specified values.
(a) For measurement of insulation resistance and acceptable standard values, please refer to measures stated in 4.1.2 “Measurement of insulation resistance”.
(b) Insulation resistance test should be performed once every three months.

2.5

If the motor is not in operation for a long period (one week and above) after installation or has been in operation but stopped for a period of time, the following precautions must be taken.

(a) Protect the motor as measures stated in 2.3.
(b) Insulation resistance test should be performed as stated in 2.4.

2.6 Bearing protection

(a) If the motor has been provided with a shaft shipping brace to prevent shaft movement during transit, it must be removed before operating the motor. It is very important that this brace be re-installed exactly as it was originally, before the motor is moved form storage or any time when the motor is being transported. This prevents axial rotor movement that might damage the bearings.
(b) Motors equipped with sleeve bearings are shipped from the factory with the bearing oil reservoirs drained. In storage, the oil reservoirs should be properly filled to the center of the oil level gauge with a good grade of rust inhibiting oil. To keep the bearing journals well oiled and to prevent rusting, the motor shaft should be rotated several revolutions about every month ensuring the shaft does not come to rest in its original position. While the shaft is rotating, it should be pushed to both extremes of the endplay.
(c) Motors with anti-friction bearings are properly lubricated with the correct grade of grease at the factory and no further greasing is required in storage. The shaft should be rotated several revolutions about every month to maintain proper distribution of the grease within the bearings.
(d) Tilt-pad bearings are a type of sleeve bearing used in special design applications. Due to the nature of this bearing, a loose oil ring for delivering lubricant cannot be provided. Therefore, during the storage internal, oil must be periodically manually introduced into the pads and housing to prevent the occurrence of oxidation of the precision machined components.
    (1) Remove the pipe plug from the bearing cap located above the tilt-bearing shell.
    (2) Pour in approximately one cup of oil every month and rotate the shaft a few revolutions about every two (2) weeks.
    (3) For long periods of storage, the oil that accumulates in the housing should be removed.

ATTENTION!
Care should be taken to keep parts such as fitting surfaces, key, shaft extension and axial central hole from any collision with foreign matter. Grease should also be generously applied to prevent rusting.

2.7 Transportation

To keep the rotating parts of motors from moving, thus preventing damage and scratching during transportation, they should be held securely with a locking device. Remove all transit clamps before operating the motor. It is very important that this device be reinstalled exactly as it was originally, before the motor is moved from storage or any time when the motor is being transported. The vertical mounting type motors should be transported in the vertical position.

Do not use the hoisting hook/eyebolts to lift more that the motor itself. They are designed to support the motor only. Make sure the hoisting hook is correctly attached to the eyebolt(s)/lug(s) are fully screwed in before hoisting. Also note such parts as fan cover, ventilation box, bracket, slip-ring, etc. may have their own hoisting lugs which can only carry their own weight. Nothing extra should be attached while hoisting.
Do not twist the steel wires and make sure the eyebolts have been firmly screwed and the sling angle is correct.

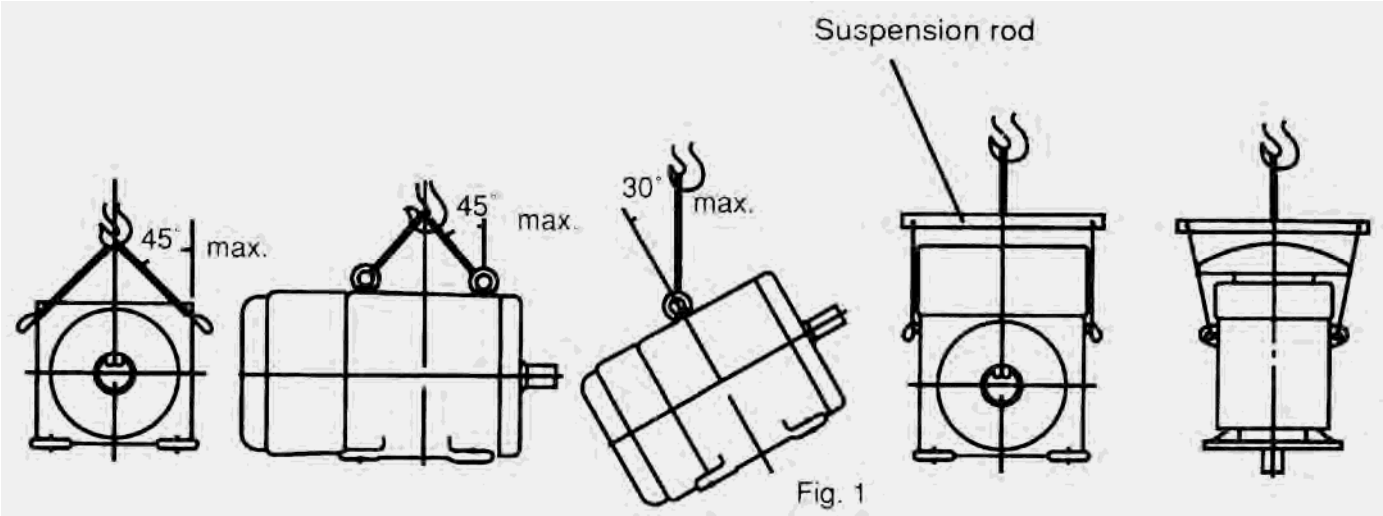

Fig. 1

3 INSTALLATION

Site and environment for motor installation
3.1.1
Standard environment and site conditions for the installation of motors are usually set as follows:

(a) Ambient temperature: -10~40ºC
(b) Humidity: Relative humidity below 90%RH for totally enclosed types, and below 80%RH for semi-enclosed types.
(c) Elevation: below 1000 meters or 3300 feet.
(d) Harmful gases, liquids, dusts, high moisture should be absent.
(e) Foundations should be strong and free of vibration.

If there are any special environmental conditions, please inform TWMC prior o ordering.

3.1.2 Ventilation and space
(a) Installation area should be well ventilated.
(b) The installation space should be large enough to facilitate heat dissipation and maintenance.

3.2 Foundation
3.2.1
Use rigid and solid sole plate or common bed as foundation.
For best motor performance, it is advisable to use a sole plate or common bed, particularly when using a shaft coupling.

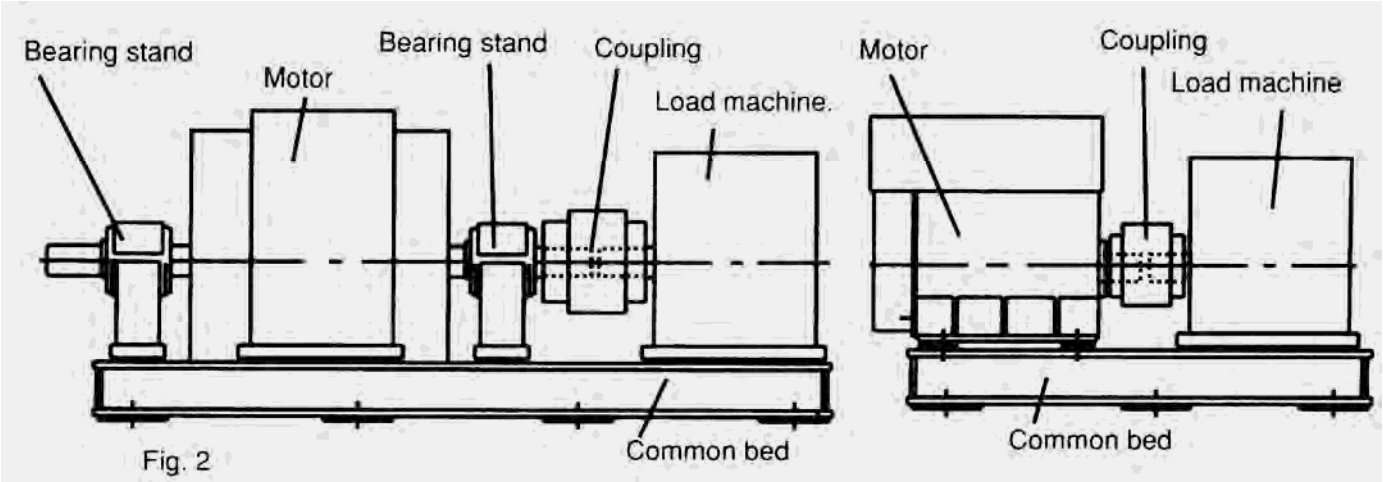

Fig. 2

3.2.2 Installation

(a) Select an appropriate foundation surface for the sole plate or common bed, which will be, considered the ultimate level.
(b) Align the position of the common bed with reference to that level.
(c) Align the level accuracy at least at four points such as bearing mounting, shaft extension etc. The accuracy should be within 0.04mm or .0015 inches
(d) Sole plate or common bed should be embedded in concrete foundation as illustrated in Fig. 3. Stiff pads should also be installed beneath the wedges, which are welded together at various spots about 400-500mm (15.75-19.70 inches) apart etc., to enable the foundation to carry evenly the weight of the whole motor.
(e) The base should be sturdy and rigid to keep it flat and level.
(f) Make sure the mortar and concrete are completely dry, and the precision of the level is acceptable, and then set the motor on the mounting foundation.
(g) Accurately install shaft couplings, belt sheaves etc., then weld the wedges solid to prevent untoward change in position.

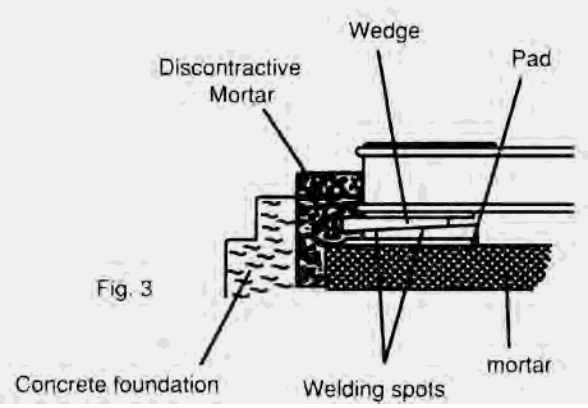

Fig. 3

3.2.3 The foundation of vertical induction motors: (Also the foundation of pump)

(a) Foundation of motor/pump must be rigid and secure to provide adequate support. There must be no vibration, twisting, misalignment etc. due to inadequate foundations.
(b) A massive concrete foundation is preferred in order to minimize vibration. Rigidity and stability are enhanced by prop plate and foundation bolt. As shown in Fig. 4.

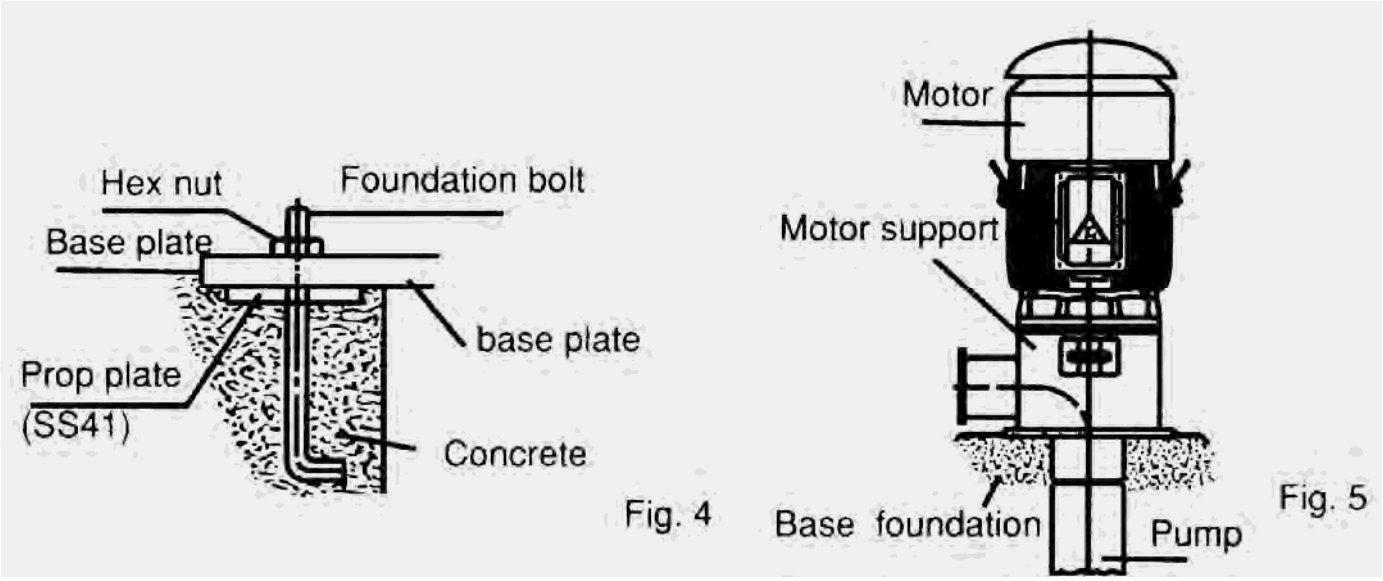

3.2.4 Installation of vertical motors:

(a) All mounting surfaces must be clean and level.
(b) Foundation must be leveled at least at 4 points and guaranteed to be below 0.04mm (.0015 in.) flat and level.
(c) Make sure the mortar and concrete are completely dry, and the precision of the level is acceptable, and then set the motor on the mounting foundation.
(d) Accurately install shaft couplings.

3.3 Installation of shaft coupling

ATTENTION!
Motors must always be accurately aligned, and this applies especially where they are directly coupled.
Incorrect alignment can lead to bearing failure, vibration and even shaft fracture. As soon as bearing failure or vibration is detected, the alignment should be checked.

3.3.1
Field application of a coupling to the motor shaft should follow the procedures recommended by the coupling manufacturer. The motor shaft extension must not be subjected to either extreme heat or cold during coupling installation.

ATTENTION!
Basically, the coupling should be heated and pushed onto the shaft extension with slight axial force. Do not hammer coupling to prevent bearing damage.

3.3.2
Although the sleeve bearings are equipped with thrust faces, these are intended only to provide momentary axial restraint of rotor movement either during start-up or when operating the motor disconnected from the driven equipment. They must not be operated under a constant thrust load unless they were originally designed for this condition.

Motors with either sleeve or anti-friction bearings are suitable for connection to the driven load through a flexible coupling. Coupling solidly to the load is not acceptable. With sleeve bearings, the flexible coupling should be of the limited end float type to prevent the possibility of any end thrust from load being transmitted to the motor bearings, which could cause bearing damage. The recommended limits of end float are as follows:

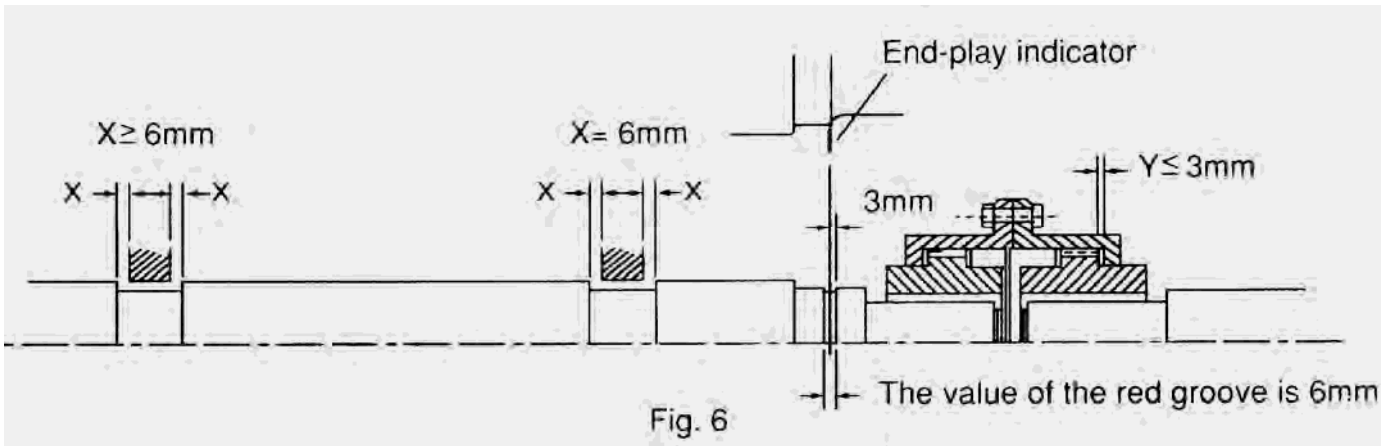

Fig. 6

(a) When the motor is in operation after installation, be sure that the end-play indicator is within the 6mm (.236 in.) of the groove on the shaft or aligned to the shaft shoulder immediately outboard of the drive-end bearing to assure there is low friction between shaft and bearing.
(b) Unless otherwise specified, the designed end-play value X of the groove for TWMC motors in general is within 6mm (.236 in.) as illustrated in Fig. 6. In essence, the endplay indicator is adjusted to point at the center of the groove or the drive-end shaft shoulder; thus X equals to 6±1mm or so, and the endplay value (Y) of the couplings should equal or be smaller than 3mm (.118 in.).
(c) If the desired value Y is grater than 3mmm (.118 in.) caused for instance by a thrust load and/or load machine with large end-play, please inform TWMC prior to entering an order.

3.3.3
In aligning the motor (and rotor) axially with the driven equipment, consideration should be given not only to the endplay indicator position but also to axial shaft expansion and increase in shaft centerline height due to thermal effects. In general, the axial shaft growth for motors can be disregarded since neither bearing is fixed and any shaft growth due to temperature increase will produce an elongation away from the coupling.

Shaft height growth (change in shaft centerline elevation) for TEFC machines can be calculated as follows:

$$\Delta = (0.0005") \times (\text{motor foot to shaft £ dimension})$$

For non-TEFC machines, divide the number by 2.

3.3.4
It is desirable, in normal operation that the motor operates on its magnetic center, so that no axial force is exerted on the coupling.

The motor shaft and the driven shaft should be aligned within the following tolerances in both angular and parallel alignment:

Unit: mm

TIR	Range of rotating speed	Solid coupling	Flexible coupling
C	2500 rpm and above	0.03	0.03
	Below 2500 rpm	0.04	0.05
A	2500 rpm and above	0.03	0.03
	Below 2500 rpm	0.03	0.04

Angular misalignment is the amount by which the centerlines of driver and driven shafts are skewed. It can be measured using a dial indicator set up as shown in Fig. 7. The couplings are rotated together through 360 degrees so that the indicator does not measure runout of the coupling hub face. The shafts should be forced against either the in or out extreme of their end float while being rotated.

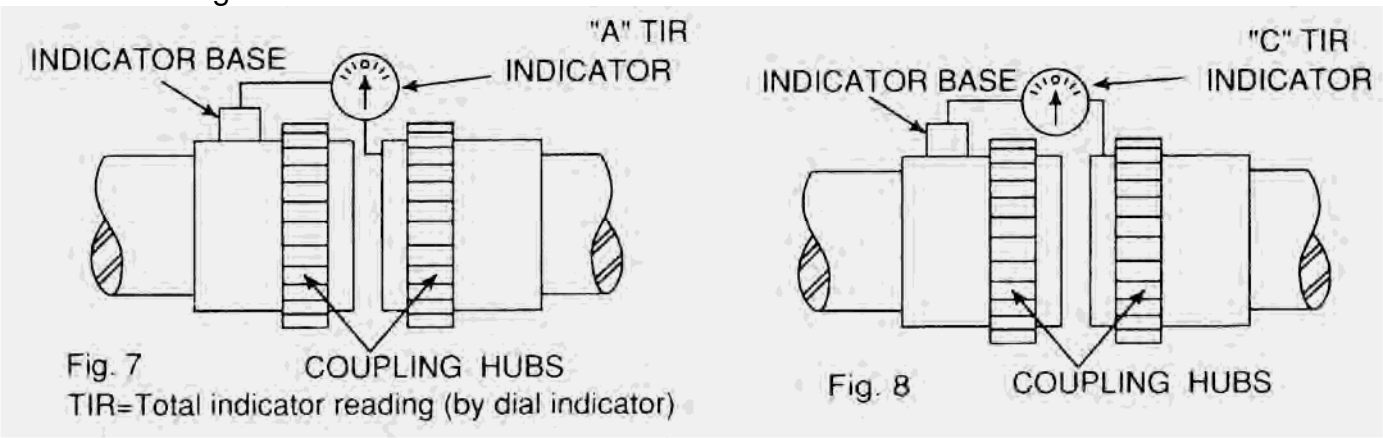

Fig. 7 TIR=Total indicator reading (by dial indicator)

Fig. 8

Parallel misalignment is the amount by which the centerlines of the driver and driven shafts are out of parallel. It can be measured using a dial indicator set up as shown in Fig. 8. Again, the couplings are rotated together through 360 degrees so that the indicator does not measure runout of the coupling hub outside diameter.

3.3.5

After the motor has been properly aligned with the driven equipment and the hold-down bolts have been installed and tightened, for motors with fabricated frames, at least two dowel pins should be installed in two diagonally opposite motor feet.

3.3.6 Installation of shaft coupling: (Vertical hollow shaft motor only)

Bolted Coupling as shown in Fig. 9

(a) Bearings are provided to absorb some upward shaft thrust when the coupling is fitted.
(b) The coupling is fastened with bolts.
(c) This coupling type is not auto-release type.

Note: Standard high thrust motors can absorb momentary up-thrust load up to 30% of the standard down thrust load. If the up-thrust is long in duration (over 10 Seconds) and/or exceeds 30% of the standard high thrust rating, special design arrangements are required and standard motor is not suitable.

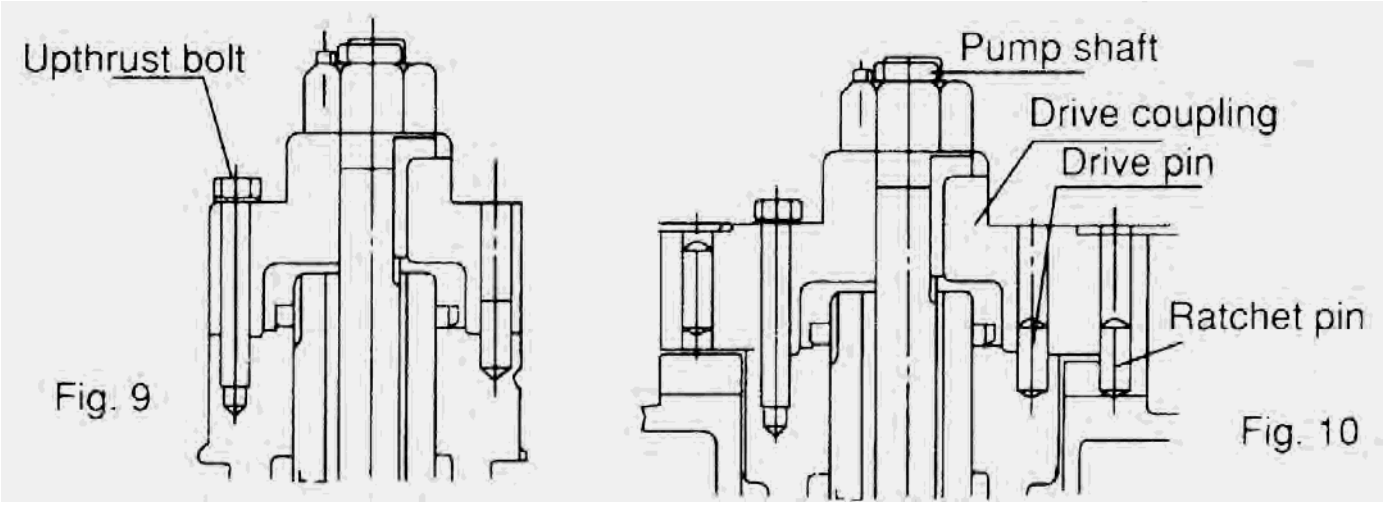

3.3.7 Non-reverse ratchet/coupling, as Fig. 10 (If necessary)

The non-reverse coupling is also a bolted type and,

(a) It prevents the pump and motor from rotating in the reverse direction.
(b) It also prevents damage form over speeding and damage to pump shaft and bearings.
(c) The ratchet pins are lifted by the ratchet teeth and are held clear by centrifugal force and friction as the motor comes up to speed.
(d) When power is removed, speed decreases, and the pins fall. At the instant of reversal, a pin will catch in a ratchet tooth and prevent backward rotation.
(e) When installing the non-reverse coupling, do not use lubricant. Lubricant will interfere with proper operation. The top half of the coupling should seat solidly on the lower half and the pins should touch the bottom of the pockets between the teeth in the plate.
(f) As with the bolted coupling, the up-thrust capabilities are 30% of the standard high thrust rating for down thrust.

ATTENTION!
Do not apply non-reverse ratchets on applications in which the pump reversal time from shutdown (the instant the stop button is pressed) to zero speed is less than one second.

3.4 Installation for belt drive

In general, power transmission though direct flexible coupling is appropriate for large motors. Such motors are not suitable for belt, chain or gear connection unless specially designed for such service. However, for small and medium motors of which outputs within the ranges shown on table below, it is acceptable to use belt transmission as indicated. Beyond these ranges, do not apply belt sheaves unless specially designed.

3.4.1

The diameter ratio between conveyance sheaves should not be greater than 5 to 1 for flat belts, and 8 to 1 for V-belts. It is also advisable to limit the belt velocity to under 35m/sec (115 ft/sec) to limit belt abrasion and vibration. The smaller the outer diameter of the V-belt sheave, the greater the shaft bending stress will be. If the bending stress is in excess of the shaft fatigue stress, the shaft may break. Therefore, please inform TWMC when you have decided the size of the sheaves and the length of the belts upon ordering.

ATTENTION!
Place the sheave and belt as close as possible to the motor body (it is advisable to make x as shown in Fig. 11 equal to 0) to reduce the bending moment and improve shaft life.

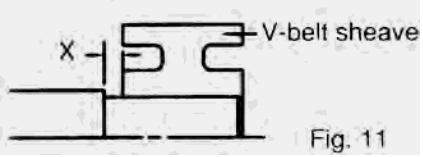

Fig. 11

3.4.2 Table of belt-sheave application for general electric motors

Output (KW/HP)			V-Belt Sheave							
			Conventional V-Belts				Narrow V-Belts			
4P	6P	8P	V-Belt Type	Number Of Belts	Min. PCD (mm)	Max Width (mm)	V-Belt Type	Number Of Belts	Min. PCD (mm)	Max Width (mm)
11/15	-	-	B	4	160	82	3V	4	125	48
-	11/15	-	B	5	170	101	3V	5	140	59
-	-	11/15	B	5	190	101	3V	6	160	69
15/20	-	-	B	5	170	101	3V	6	125	69
-	15/20	-	B	5	224	101	3V	6	160	69
-	-	15/20	C	4	224	111	5V	3	180	60
18.5/25	-	-	B	5	200	101	3V	6	140	69
-	18.5/25	-	C	4	224	111	5V	3	180	60
-	-	18.5/25	C	5	224	136	5V	4	180	78
22/30	-	-	B	5	224	101	5V	6	160	69
-	22/30	-	C	5	224	136	3V	4	180	78
-	-	22/30	C	5	250	136	5V	4	200	78
30/40	-	-	C	5	224	136	5V	4	180	78
-	30/40	-	C	5	265	136	5V	4	224	78
-	-	30/40	C	6	265	162	5V	5	224	95
37/50	-	-	C	6	224	162	5V	4	200	78
-	37/50	-	C	6	265	162	5V	4	224	78
-	-	37/50	C	7	280	187	5V	5	250	95
45/60	-	-	C	6	265	162	5V	4	224	78
-	45/60	-	C	7	280	187	5V	5	224	95
-	-	45/60	C	7	315	187	5V	6	250	113
55/75	-	-	C	7	265	187	5V	5	224	95
-	55/75	-	C	8	300	213	5V	6	250	113
-	-	55/75	D	5	355	196	5V	6	280	113
75/100	-	-	C	8	315	213	5V	6	250	113
-	75/100	-	D	6	355	233	5V	6	315	113
-	-	75/100	D	6	400	233	5V	6	355	113
-	90/120	-	D	6	400	233	5V	6	355	113
-	-	90/120	D	6	425	233	8V	4	355	124
-	110/150	-	D	7	400	270	8V	4	355	124
-	132/175	110/150	D	7	450	270	8V	4	400	124
-	160/200	132/175	D	9	450	344	8V	4	450	124

3.5 Conveyance with chain or gear

3.5.1

Make sure the loading capacity of shaft and bearings is appropriate for the size and installation position (overhung) of chain and gear. If necessary, please contact us to ensure the shaft and bearings will meet your requirements.

3.5.2
Pay close attention to ensure the parallelism of shafts.

3.5.3
The teeth of couplings should be correctly and precisely matched; the force conveyance centers should lie on the same line.

3.5.4
There should be no skip, jumping, vibration or unusual noises.

ATTENTION!
Do not hammer the conveyance devices such as couplings, belt sheaves, chain wheels, gears etc. onto the shaft. Those shaft fitments should be fitted and removed only by means of suitable devices. Heat shrinking may be a better alternative to avoid damaging bearings and components.

The exposed rotating parts should be covered to prevent accidents.

3.6 Electrical connections
All interconnecting wiring for controls and grounding should be in strict accordance with local requirements such as the USA National Electrical Code and UK IEE wiring regulations. Wiring of motor and control, overload protection and grounding should follow the instructions of connection diagrams attached to the motor.

3.6.1 Power
The rated conditions of operation for the motor are as shown on the nameplate. Within the limits, given below, of voltage and frequency variation from the nameplate values, the motor will continue to operate but with performance characteristics that may differ from those at rated conditions:

±10% of rated voltage
±5% of rated frequency
±10% combined voltage and frequency variation so long as frequency variation is no more than ±5% of rated.

Operating the motor at voltages and frequencies outside of the above limits can result in both unsatisfactory motor performance and damage to or failure of the motor.

3.6.2
The main lead box furnished with the motor has been sized to provide adequate space for the make-up of the connections between the motor lead cables and the incoming power cables.

The bolted joints between the motor lead and the power cables must be made and insulated in a workman-like manner following the best trade practices.

3.6.3
Either fabricated motors or fan cooled cast frame, motors are all provided with grounding pads or bolts.

The motor must be grounded by proper connection to the electrical system ground.

3.6.4
The rotation direction of the motor will be as shown by either a nameplate on the motor or the outline drawing. The required phase rotation of the incoming power for this motor rotation may also be stated. If either is unknown, the correct sequence can be determined in the following manner: While the motor is uncoupled from the load, start the motor and observe the direction of rotation. Allow the motor to achieve full speed before disconnecting it from the power source. Refer to the operation section of these instructions for information concerning initial start-up. If resulting rotation is incorrect, it can be reversed by interchanging any two (2) incoming cables.

3.6.5 Auxiliary devices
Auxiliary devices such as resistance temperature detectors, thermocouples, thermoguards, etc., will generally terminate on terminal blocks located in the auxiliary terminal box on the motor. Other devices may terminate in their own enclosures elsewhere on the motor. Such information can be obtained by referring to the outline drawing. Information regarding terminal designation and the connection of auxiliary devices can be obtained from auxiliary drawings or attached nameplates.
If the motor is provided with internal space heaters, the incoming voltage supplied to them must be exactly as shown by either a nameplate on the motor or the outline drawing for proper heater operation.

Caution must be exercised anytime contact is made with the incoming space heater circuit as space heater voltage is often automatically applied when the motor is shutdown.

4. OPERATION

4.1 Examination before start

4.1.1
When motors are installed in good manner, ensure the wiring is according to the diagram. Also, the following points should be noted:

(a) Make sure all wiring is correct.
(b) Ensure the sizes of cable wires are appropriate and all connections are well made for the currents they will carry.
(c) Ensure all connections are properly insulated for the voltage and temperature they will experience.
(d) Ensure the capacity of fuses, switches, magnetic switches and thermo relays etc. are appropriate and the contactors are in good condition.
(e) Make sure the frame and terminal box are grounded.
(f) Make sure that the starting method is correct.
(g) Make sure switches and starters are set at their right positions.
(h) Motor heaters must be switched off when the motor is running.

4.1.2 Measurement of insulation resistance

During and immediately after measuring, the terminals must not be touched as they may carry residual dangerous voltages. Furthermore, if power cables are connected, make sure that the power supplies are clearly disconnected and there are no moving parts.

(a) For rated voltage below 1000V, measured with a 500VDC megger.
(b) For rated voltage above 1000V, measured with a 1000VDC megger.
(c) In accordance with IEEE 43, clause 9.3, the following formula should be applied:

$$R \geq \left(\frac{\text{Rated voltage (v)}}{1000} + 1 \right) \times 10 (M\Omega)$$

(d) On a new winding, where the contaminant causing low insulation resistance is generally moisture, drying the winding through the proper application of heat will normally increase the insulation resistance to an acceptable level. The following are several accepted methods for applying heat to the winding:
   (1) If the motor is equipped with space heaters, they can be energized to heat the winding.
   (2) Direct current (as from a welder) can be passed through the winding. The total current should not exceed approximately 50% of rated full load current. If the motor has only three leads, two must be connected together to form one circuit through the winding. In this case, one phase will carry the fully applied current and each of the others, one-half each. If the motor has six leads (3 mains and 3 neutrals), the three phases should be connected into one series circuit.

Ensure there is adequate guarding so live parts cannot be touched.

   (3) Heated air can either blown directly into the motor or into a temporary enclosure surrounding the motor. The source of heated air should preferably be electrical as opposed to fueled (such as kerosene) where a malfunction of the fuel burner could result in carbon entering the motor.

ATTENTION!
Caution must be exercised, when heating the motor with any source of heat other than self contained space heaters, to raise the winding temperature at a gradual rate to allow any entrapped moisture to vaporize and escape without rupturing the insulation. The entire heating cycle should extend over 15-20 hours.

Insulation resistance measurements can be made while the winding is being heated. However, they must be corrected to 40ºC for evaluation since the actual insulation resistance will decrease with increasing temperature. As an approximation for a new winding, the insulation resistance will approximately halve for each 10ºC increase in insulation temperature above the dew point temperature.

(e) Should the resistance fail to attain the specified value even after drying, careful examination should be undertaken to eliminate all other possible causes, if any.

4.1.3 Power Source

(a) Ensure the capacity of the power source is sufficient.
(b) Ensure the supply voltage and frequency ratings are identical to those on the nameplate.
(c) Voltage variation should be confined to within ±10% of the rated value and the phase to phase voltages should be balanced.

4.1.4 Bearing lubrication

(a) For sleeve bearing motors, the oil reservoir must be filled with oil to the correct level. On self-lubricated bearings, the standstill oil level will be at the center of the oil gauge. The proper oil is a rust and oxidation inhibited, turbine grade oil. Refer to the lubrication nameplate for the recommended viscosity.

(b) Motors, which are supplied with provision for flood lubrication, have an inlet orifice to meter the oil flow to the bearing. Refer to the outline drawing for these values. If the supply pressure does not match that stated on the outline, the orifice size must be adjusted to produce the specified flow rate. The drain adapter (also provided) has a weir plate fixed to the inside of the pipe to permit the establishment of the proper oil level. This weir plate must be located at the bottom of the pipe and must be parallel to the plane of the motor feet. To ensure optimum flow, the drain line should be vented to the atmosphere.

Oil inlet temperature:	Normal below 50ºC
	Alarm 60ºC
	Trip 65ºC

(c) If the motor is in storage for over three (3) months, refilling of some new oil should be undertaken before operation to prevent bearing damage due to dry friction. The oil level should be kept at the center of the oil gauge. If necessary, drain some oil after refilling.

(d) Motors that have been designed with anti-friction bearings for use with an oil mist lubrication system have been packed at the factory with a small amount of grease for short test runs. Continuous running should not be considered unless the oil mist system is installed and operating.

(e) Grease lubricant type

(1) The bearings have been well greased at the factory before delivery. However, regreasing is required if a significant period has elapsed between manufacture and use or in storage

(2) All motors with ZZ bearings will have SHELL Alvania R3 (*Lithium base grease*). All motors with open bearings will have Polyrex EM (polyurea base grease).

4.1.5 Cooling water for the cooler on water-cooled motors

Make sure the quality, volume and inlet temperature of cooling water for the motors are normal before the machine is in operation.

Water:	General tower water or industrial water.
Volume:	Please see outline drawing
Inlet temperature:	Normal below 30ºC
	Alarm 35ºC
	Trip 40ºC

ATTENTION!
Make sure all locks, which fasten the movable parts of the motors during transportation, are dismantled and the shaft can rotate freely.

ATTENTION!
Ensure there is no foreign matter or tools inside the motors before starting motors.

4.1.6
Make sure the transmission system, including belts, screws, bolts, nuts and set pins are in good condition.

The keys fitted to the shaft extensions are held by plastic tape only to prevent them from falling out during transportation or handling. The shaft key shall be removed to avoid flying out, when the motor is operated prior to the couplings etc. being fitted to the shaft extension.

4.1.7
Make sure the items above are examined. Test the motor running with or without load. Record and check according to "Maintenance" at 15-minute intervals during the first three hours of operation. Then regular examinations should take place at longer intervals. If all goes well the motor can be classified as "in good order".

4.2 Starting operation

4.2.1 Starting load
Initially run the motor unloaded prior to coupling to other machines. Unless otherwise specified, a motor usually starts with light load, which is then gradually increased, proportional to the square of the speed and at last reaches 100% load at full load speed.

4.2.2 Starting
Too frequent starts can be harmful to the motors. The following restrictions should be observed:

(a) Motor can be restarted should the initial start fail. Two starts are generally permissible when the motor is cold.
(b) Motor can be started only once when it is at normal running temperature.
(c) Should additional starts be necessary beyond the conditions stated above, the following restrictions should be noted:
  (1) Let the motor cool down for 60 minutes before restarting, fully loaded.
  (2) Let the motor cool down for 30 minutes before restarting, unloaded.
  (3) Two inching starts can be regarded as one normal start.

ATTENTION!
If the motor rotor fails to start turning within one or two seconds, shut off the power supply immediately.
Investigate thoroughly and take corrective action before attempting a restart.

Possible reasons for not starting are:
(1) Too low a voltage at the motor terminals.
(2) The load is too much for the rotor to accelerate.
(3) The load is frozen up mechanically.
(4) All electrical connections have not been made.
(5) Single-phase power has been applied.
(6) Any combination of the above.

4.2.3 Rotating direction

(a) Most TWMC motors are bi-directional. However, when some special types, such as high speed 2-Pole, certain large capacity motors, those with a non-reversing ratchet etc., should rotate in one direction, please ensure the rotation is in conformity with the directional arrow-mark shown on the attached nameplate.

(b) To reverse a bi-directional motor, cut the power and wait until the motor stops. Then interchange any two of the three phases.

4.2.4 Power source, Voltage, Current

(a) Ensure the voltage and frequency of the power source are identical to the ratings shown on the nameplate.

(b) Voltage variation should be confined to within ±10% of the rating and the three phase voltages should be in full balance

(c) Ensure the motor phase currents, when without load, are within ±5% of the average values.

4.2.5

Frequency variation should be confined to within ±5% of the rating. The aggregate variation of voltage and frequency should be confined to within ±10% of the absolute value of the ratings.

Starting time and unusual noises

ATTENTION!
Starting time is longer for the motors with large inertia. However, if starting time is longer than usual or if there is difficulty in starting, or there is abnormal noise, do not run the motor and refer to TWMC Service representative.

4.2.6 Sleeve bearing oil rings (sleeve bearing types only)

As the oil ring is used to carry lubricant to sleeve bearings, frequently check to ensure the oil ring is in motion.

4.2.7 Bearing temperature rise

Following the initial start-up, the bearing temperatures should be closely monitored. The rate of rise in bearing temperature is more indicative of impending trouble than is the actual temperature.

ATTENTION!
If the rate of rise in temperature is excessive or if the motor exhibits excessive vibration or noise, it should be shut down immediately and a thorough investigation made as to the cause before it is operated again.

If the bearing temperature rise and motor operation appear to be normal, operation should continue until the bearing temperature stabilizes.

Recommended limits on bearing temperature are as follows:

Sleeve Bearings	**Total measured temperature**
● By permanently installed detector	90ºC
● By temporary detector on top of the bearing sleeve near the oil ring	85ºC

Anti-Friction Bearings	Total measured temperature
● By permanently installed detector	100ºC
● By temporary detector measuring the outside of the bearing housing	95ºC

ATTENTION! (For sleeve bearing)

(1) It must be noted that when operating flood lubricated sleeve bearings without outside lubrication supplied, the bearing temperature must not be allowed to exceed 85ºC total temperature

(2) Under normal condition, for the self-lube bearing, the rate of temperature rise should be from 11 to 14ºC for the first ten (10) minutes after starting up and approximately 22ºC at thirty (30) minutes. The rate of bearing temperature rise is a function of the natural ventilation and operating conditions.

(3) When the rate of bearing temperature rise is less than 1ºC per half-hour, the bearing temperature is considered to be stabilized.

(4) If the total bearing temperature exceeds 95ºC, the motor should be shut down immediately.

Noise and Vibration

ATTENTION!
Any abnormal noise or vibration should be immediately investigated and corrected. Increased vibration can be indicative of a change in balance due to mechanical failure of a rotor part, a stator winding problem or a change in motor alignment.

5. MAINTENANCE

5.1 Major points in regular inspections and maintenance.

For safety, maintenance and repairs must only be carried out by properly trained personnel.

Some testing, such as insulation resistance, usually requires the motor to be stopped and isolated from power supplie(s).

Routine inspection and maintenance are usually performed by looking, listening, smelling and simple meters.

High temperature may arise under operating conditions on the motor surfaces, so that touching should be prevented or avoided. Keep away from moving and live parts. Unless deemed necessary, do not remove guards whilst assessing the motor.

Timely replacement of worn parts can assure longevity and prevent breakdown.

Routine inspection and regular inspection and maintenance are important in preventing breakdown and lengthening service life.

Owing to the varied time and circumstances, motors are used, it is difficult to set the items and periods for regular inspection and maintenance. However, as a guide it is recommended to be performed periodically according to factory maintenance program. Generally, the inspection scope determined by the following factors:

(a) Ambient temperature.
(b) Starting and stopping frequency.
(c) Troublesome parts usually affecting motor functions.
(d) Easily abraded parts.
(e) The important position of motor in the operational system of a factory should be duly recognized. Therefore, its health and wellbeing should be fully protected especially when it is operating in severe conditions.

5.2 Motor windings:

(a) Measurement of insulation resistance and standards to determine quality of insulation resistance, please refer to measures stated in 4.1.2 “Measurement of insulation resistance”.
(b) Inspection of coil-ends:
  (1) Grease and dust accumulated on coils may cause insulation deterioration and poor cooling effect.
  (2) Moisture must not accumulate. Keep coils warm when motor is not in use if moisture can be seen.
  (3) Discoloring. This is mainly caused by overheating.
(c) Ensure no untoward change of wedges from original position.
(d) Ensure the binding at the coil end is in its normal position.

5.3 Clean the interior of the motor:

(a) After a motor is in operation for some time, accumulation of dust, carbon powder and grease etc., on the inside is unavoidable, and may cause damage. Regular cleaning and examination is necessary to assure top performance.
(b) Points to note during cleaning:
  (1) If using compressed air or blower:
    (a) Compressed air should be free of moisture.
    (b) Maintain air pressure at 4 kg/cm², since high pressure can cause damage to coils.
  (2) Vacuum
    Vacuum cleaning can be used, both before and after other methods of cleaning, to remove loose dirt and debris. It is a very effective way to remove loose surface contamination from the winding without scattering. Vacuum cleaning tools should be non-metallic to avoid any damage to thee winding insulation
  (3) Wiping
    Surface contamination on the winding can be removed by wiping using a soft, lint-free wiping material. If the contamination is oily, the wiping material can be moistened (not dripping wet) with a safety type petroleum solvent. In hazardous locations, a solvent such as inhibited methyl chloroform may be used, but must be used sparingly and immediately removed. While this solvent is non-flammable under ordinary conditions, it is toxic and proper health and safety precautions should be followed while using it.

ATTENTION!
Solvents of nay type should never be used on windings provided with abrasion protection. Abrasion protection is a gray, rubber-like coating applied to the winding end-turns.

⚠ **Adequate ventilation must always be provided in any area where solvents are being used to avoid the danger of fire, explosion or health hazards. In confined areas (such as pits) each operator should be provided with an airline respirator, a hose mask or a self-contained breathing apparatus. Operators should wear goggles, aprons and suitable gloves. Solvents and their vapors should never be exposed to open flames or sparks and should always be stored in approved safety containers.**

(4) Keep core ducts completely clean. The difference in temperature rise could be around 10℃ before and after cleaning

5.4 Clean the exterior of the motor:

(a) On open ventilated motors, screens and louvers over the inlet air openings should not be allowed to accumulate any build-up of dirt, lint, etc. that could restrict free air movement.

ATTENTION!
Screens and louvers should never be cleaned or disturbed while the motor is in operation because any dislodged dirt or debris can be drawn directly into the motor.

(b) If the motor is equipped with air filters, they should be replaced (disposable type) or cleaned and reconditioned (permanent type) at a frequency that is dictated by conditions. It is better to replace or recondition filters too often than not often enough.

(c) Totally enclosed air to air cooled and totally enclosed fan cooled motors require special cleaning considerations. The external fan must be cleaned thoroughly since any dirt build-up not removed can lead to unbalance and vibration. All of the tubes of the air-to-air heat exchanger should be cleaned using a suitable tube brush having synthetic fiber bristles (not wire of any type).

5.5 Maintenance of anti-friction bearings

5.5.1 Frequency of re-lubrication:

The life of grease varies greatly as a result of types of model, revolution speed, temperature, operational conditions etc. It is, therefore, impossible to be precise about replenishment intervals. However, for normal direct coupling transmission, the periods shown as Table 1 may be used as a guide.

Remarks:

(a) The periods shown in Table 1 should be halved where bearings are used for belt drive and/or in dirty or high ambient temperature or high humidity environments.

(b) Please refer to the lubrication nameplate, if attached to the motor.

(c) For bearing numbers outside the range of Table 1, please contact TWMC

(d) If the periods referred to in Table 1 for drive-end bearing and opposite drive-end are different, for the convenience of maintenance operation, please take the shorter one the required grease replenishment period of these bearings.

5.5.2 Kinds of grease:

All motors with ZZ bearings will have SHELL Alvania R3 (lithium base grease). All motors with open bearings will have Polyrex EM (polyurea base grease).
Certain T-frame models will utilize special grease and will be noted on the lubrication nameplate. Please us identical grease or its equivalents when maintaining lubrication schedule.

ATTENTION!
Do not mix different kinds of grease.
Mixing grease with different type of thickeners may destroy its composition and physical properties. Even if the thickeners are of the same type, possible differences in the additive may cause detrimental effects.

5.5.3 Grease quantity

The amount of grease per replenishment depends on the type, size and construction of the bearings. The maximum amount of one replenishment for each bearing is shown in Table 2.

5.5.4 Re-greasing

If re-lubrication is to be performed when the motor is running, stay clear of rotating parts.

It is advisable to re-grease when the motor is running to allow the new grease to be evenly distributed inside the bearing.
Before re-greasing, the inlet fitting should be thoroughly cleaned to prevent any accumulated dirt from being carried into the bearing with the new grease. The outlet of grease drainage should be opened to allow the proper venting of old grease.

Use a grease gun to pump grease through grease nipple into the bearings. After re-greasing, operate the motor for 10-30 minutes to allow any excess grease to vent out.

TABLE 1.

Bearing Number		600 RPM	720 RPM	750 RPM	900 RPM	1000 RPM	1200 RPM	1500 RPM	1800 RPM	3000 RPM	3600 RPM
62XX 63XX 72XX 73XX	6210										
	12									2000 Hrs.	
	13										
	14									1000 Hrs.	
	15										
	16									720 Hrs.	
	17							2000 Hrs.			
	18			3000 Hrs.							
	20										
	22										
	24							1500 Hrs.			
	26										
	28					2000 Hrs.		1000 Hrs.			
	30										
	32							500 Hrs.			
	34					1500 Hrs.					
	36										
	38			2000 Hrs.		1000 Hrs.					

Bearing Number		600 RPM	720 RPM	750 RPM	900 RPM	1000 RPM	1200 RPM	1500 RPM	1800 RPM
NU2XX NU3XX	NU214								
	15							2000 Hrs.	
	16								
	17								
	18			3000 Hrs.				1500 Hrs.	
	20								
	22							1000 Hrs.	
	24								
	26					2000 Hrs.			
	28							500 Hrs.	
	30								
	32								
	34			2000 Hrs.		1000 Hrs.			
	36								
	38	2000 Hrs.							
	40								
	44			1000 Hrs.					
	48	1000 Hrs.							

Bearing Number		600 RPM	720 RPM	750 RPM	900 RPM	1000 RPM	1200 RPM	1500 RPM	1800 RPM
222XX 223XX	22220							300 Hrs.	
	22								
	24	1000 Hrs.				500 Hrs.			
	26								
	28								
	30					300 Hrs.			
	32			500 Hrs.					
	34								
	36								
	38	500 Hrs.							
	40			300 Hrs.					
	44								
	48	300 Hrs.							

TABLE 2.

Bearing No.		Amount of replenishment
62XX 72XX NU2XX 2222XX	6210	30 g
	6212	40
	6213	50
	6214	50
	6215	60
	6216	60
	6217	80
	6218	80
	6220	100
	6222	120
	6224	120
	6226	140
	6228	160
	6230	180
	6232	200
	6234	250
	6236	300
	6238	350
	6240	400
	6244	450
	6248	500

Bearing No.		Amount of replenishment
63XX 73XX NU223XX 223XX	6310	40 g
	6312	60
	6313	80
	6314	80
	6315	100
	6316	100
	6317	120
	6318	120
	6320	160
	6322	220
	6324	270
	6326	300
	6328	400
	6330	450
	6332	500
	6334	600
	6336	700
	6338	800
	6340	900
	6344	900
	6348	900

*Fill new grease until it overflows and the old grease is entirely replaced.

5.5.5 Oil re-lubrication (For oil lubrication types only)

Maintain proper lubrication by checking the oil level periodically and adding oil when necessary. Because of the initial clearing action of the bearing and the expansion of the oil as it comes up to operating temperature, the oil level will be higher after the motor has been in operation for a while than it is with the motor at standstill.

Overfilling should be avoided not only because of the possibility that expansion may force the oil over the oil sleeve and on to the rotor, but also because too high an operating oil level prevents the bearing form clearing itself of excess oil. The resultant churning can cause extra loss, high temperatures, and oxidized oil. If, during operation, the oil level goes above the maximum shown on the sight gauge, drain enough oil to bring the level back within the recommended operating range. **Do not permit the operating level to fall below the minimum shown on the gauge.**

ATTENTION!
Should it ever become necessary to add excessive amount of make-up oil, investigate immediately for oil leaks.

Change the oil at regular intervals. The time between oil changes depends upon the severity of operating conditions and, hence, must be determined by the motor user. Two or three changes a year is typical, but special conditions, such as high ambient temperature, may require more frequent changes. Avoid operating the motor with oxidized oil.

Use only good grade, oxidation-corrosion-inhibited turbine oils produced by reputable oil companies.

The viscosity of the oil to be used depends upon the type and size of the bearings, its load and speed, the ambient temperature, and the amount and temperature of the cooling water (if used)). The lubrication nameplate or instructions with each motor specifies the viscosity range of oil suitable for average conditions. The usual oil viscosity range of oil suitable for average conditions. The usual oil viscosity recommendations are summarized in Table 3. Operation in ambient temperatures that are near or below freezing may require preheating the oil or the use of special oil. Whenever the motor is disassembled for general cleaning and reconditioning, the bearing housing may be washed out with a suitable cleaning solvent. Be sure that the oil-metering hole is clear, and then dry the housing thoroughly before re-assembly, and ensure all traces of cleaning solvent have been removed.

TABLE 3 Oil Viscosity**

Bearing function and location	Bearing Type	Oil Viscosity - SSU	
		@ 100℉	@ 200℉
Thrust Bearing	72XX, 73XX Angular contact ball And/or (62XX, 63XX)	150	45
	Spherical roller	300	53
	Plate (Kingsbury Type)	300	53

**Remark: When a lubrication nameplate attached to the motor, use lubrication oil it stipulates.

5.5.6 Cleaning and installation of bearings

(a) Apply the proper amount of grease to the disassembled parts of the bearing after they have been thoroughly cleaned with high quality cleaning oil. Then protect them from contamination before and during assembly.

(b) Bearing installation

ATTENTION!
Before installing the bearings, make sure that the shaft mounted parts inside the bearings are in place before installation.

Since the bearing is a high precision component, it is important to avoid ingression of dust and foreign matter, and hammering during cleaning and installation. Use extreme care and insure clean conditions during installation and assembly.

ATTENTION!
The best way for bearing installation is heat shrinking. Knocking and hammering during installation should be avoided absolutely.

The bearing should be heated in a bath of clean oil at a temperature of approximately 80℃. After warming, slide the bearings in place quickly and nimbly so that it has not shrunk before being fully in position.
Grease the bearing after the temperature returns to normal, and then reassemble the motor.

5.6 Maintenance of sleeve bearings

5.6.1 Daily inspections

(a) Ensure the volume and quality of lubrication oil are in compliance with specifications.

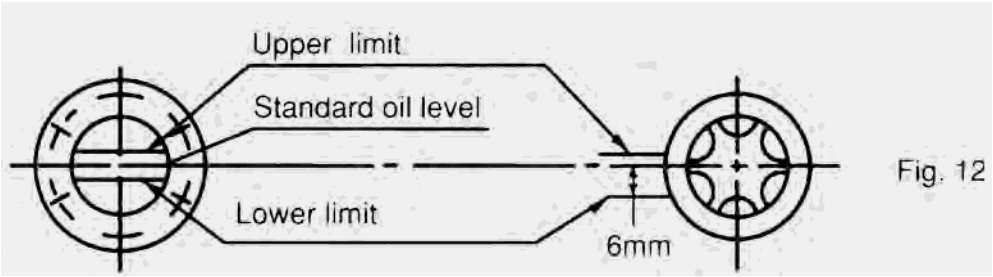

Fig. 12

(b) Ensure there is motion of the oil ring and it is not clamped.

(c) The indicator of the shaft endplay should be restricted within the specified range of the red groove of the shaft or the ±3mm (.118 in.) range of the drive-end shaft shoulder, or the bearing may be damaged.

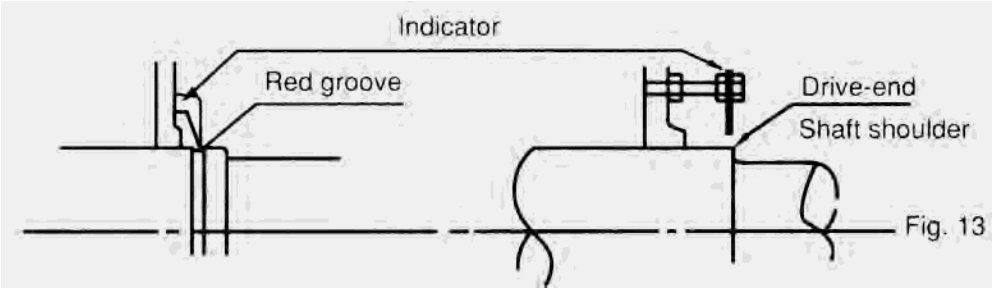

Fig. 13

5.6.2 Regular examination

(a) Periodical change of oil

The oil reservoirs of self (not flood) lubricated bearings should be drained and refilled about every six (6) months. More frequent changes may be needed on high speed (3600 rpm) motors or if severe oil discoloration or contamination occurs. In conditions where contamination does occur, it may be advisable to flush the reservoir with kerosene to remove any sediment before new oil is added. Proper care must be taken to thoroughly drain the reservoir of the flushing material before refilling with the new oil.

Refill the reservoir to the center of oil sight glass with a rust and oxidation inhibited turbine grade oil. Refer to the outline and lubrication nameplate for the correct viscosity.

(b) Quantity of lubrication oil

Please refer to the lubrication nameplate for oil quantity.

(c) Oil viscosity

(d)

ISO	Equivalents	Viscosity (SUS/100℉)
VG32	Esso Teresso 32	150
VG46	Esso Teresso 46	200
VG68	Esso Teresso 68	300

5.6.3 Disassembly

Prior to disassembling, ensure the power supplies are disconnected and there are no moving parts.

The bearing sleeve is of the spherically seated, self-aligning type. The opposite drive end bearing is normally insulated for larger motors (or when specified). On some motors, the insulation is bonded to the spherical seat of the bearing housing.

ATTENTION!
Extreme care must be exercised in removing the bearing sleeve from the insulated support to avoid damaging this insulation.

The following is the recommended procedure for removing the bearing sleeve:

(a) Remove the oil drain plug in the housing bottom and drain the oil sump.

(b) Remove all instrumentation sensors that are in contact with the bearing sleeve. These would include resistance temperature detectors, thermocouples, thermometers, etc..

(c) Remove the socket head bolts holding the bearing cap and the inner air seal. The end cover plate must also be removed if the non-drive end bearing is being disassembled. Remove the bearing cap and top half of the inner air seal. Place them on a clean, dry surface to avoid damage to the parting surfaces.

(d) Remove the top half of the bearing sleeve using suitable eyebolts in the tapped holes provided. Lift the bearing top straight up and avoid any contact with the shoulders of the shaft journals that might damage the thrust faces of the bearing. Place on a clean, dry surface taking care to prevent damage to either the parting surfaces or the locating pins that are captive n the top bearing half.

(e) Remove the screws at the partings in the oil ring and dismantle the ring by gently tapping the dowel pin ends with a soft face mallet. Remove the ring halves and immediately reassemble them to avoid any mix up l parts or damage to the surfaces at the partings.

(f) Pull up on the garter spring surrounding the floating labyrinth seal and carefully slip out the top half. Rotate the garter spring until the lock is visible. Twist counter-clockwise to disengage the lock, remove the garter spring then rotate the lower half of the seal out of the groove in the bearing housing. Note the condition of these floating labyrinth seals. If they are cracked or chipped, they must be replaced. Do not attempt to reuse a damaged seal.

(g) To remove the bottom bearing half, the shaft must be raised a slight amount to relieve pressure on the bearing. On the drive end, this can be done by jacking or lifting on the shaft extension. Protect the shaft. On the non-drive, jacing or lifting can be done using bolts threaded into the tapped holes provided in the shaft end.

(h) Roll the bottom bearing half to the top of the shaft journal and then lift it using suitable eyebolts threaded into the holes provided. Again avoid any contact with the shaft shoulders that could damage the bearing thrust faces. Place the lower bearing half on a clean, dry surface to protect the parting surfaces.

Use extreme care when rolling out the lower bearing half. Keep the hands and fingers well clear of any position where they might be caught by the bearing half if it were accidentally released and rotated back to its bottom position. Serious personal injury could result.

(i) Protect the shaft journal by wrapping it with clean, heavy paper or cardboard.

5.6.4 Re-assembly

Bearing re-assembly is basically a reverse of the disassembly procedures outlined above, with the following suggestions:

(a) The interior of the bearing housing should be cleaned and then flushed with clean oil or kerosene.

(b) The bearing halves and the shaft journal should be wiped clean using lint-free cloth soaked with clean oil.

(c) All parts should be carefully inspected for nicks, scratches, etc., in any contract surfaces. Such imperfections should be removed by an appropriate method such as stoning, scraping, filling, etc., followed by thorough cleaning.

(d) Before installing the floating labyrinth seal halves, observe their condition. Do not attempt to use a cracked or chipped seal. The bottom half seal has a set of drilled holes in its side face. These must be place at the bottom toward the inside of the bearing so that accumulating oil may drain back into the housing.

(e) Put a bead of Curil-T around the seal half O.D.'s on both sides adjacent to the garter spring groove. This will prevent oil by-passing the seal around its outside.

(f) Place the bottom seal half on top of the shaft and roll it into position. Install the top half and insert the garter spring pulling up on both ends to permit engaging the lock. Run a bead of Curil-T around the O.D's on both sides adjacent to the garter spring groove on this half also.

(g) Carefully reassemble the two oil ring halves. Inspect the dowel pins for burrs and straightness and make any corrections required. Do not force the ring halves together. Excessive force may alter the roundness or flatness of the oil ring which can change its oil delivery performance.

(h) Some of the pipe plugs in the housing are metric thread type. These are identified as those, which have a copper, lead, or similar material washer. If these plugs are removed,

be careful not to lose the washers. Before re-assembly, inspect the washers and replace them as required.

(i) Before installing the bearing cap, observe the position of the floating labyrinth seal. The "tab" must be on top to engage the pocket. Failure to position the seal properly will result in damage when the cap is assembled.

ATTENTION!
(1) Curil-T is the only approved compound for use in the assembly of the bearings on this motor. Other products may harden and impede the operation.
(2) During the re-assembly of the bearing parts, a thin layer of Curil-T should be applied to all gaskets and machined interface surfaces. This suggestion does not apply to the machined surfaces of the bearing liner halves.
(3) When seating the bearing shell, apply a thin layer of lube oil at the spherical surface of the liner. Slowly roll the lower bearing liner into the bearing housing making sure that the splinted surface of the liner and the housing are flush. Gradually lower the shaft onto the bearing. The weight of he shaft will help rotate the bearing liner so that the babbitt surface of the liner will match the slope of the journal. Sometimes it is required to use a rubber mallet to tap lightly on the bearing housing while slowly rolling the shaft to help this seating operation.

5.7 Maintenance of slip ring (For Wound Rotor Motors only)

Ensure motor is disconnected from power supplies and there are no accessible moving parts before maintenance operation.

5.7.1 Adjustment of carbon brush

(a) Brush pressure for normal operation:
- Electro-graphite brush…..0.2~0.25 kg/cm²
  When frequent vibrations are evident or the brush is small (area below 0.5 cm²), the pressure should be greater than as shown.

(b) Adjustment of brush pressure:
The brush pressure should be adjusted to keep normal operation as it wears.
- The brush pressure may be reduced after use, so it is necessary to re-adjust. For adjustment, please turn adjusting screw, pressure adjusting pin or pressure adjusting plate as shown in Fig. 14 to obtain the correct tension (=0.23 x brush cross sectional area in cm²) ±10% kg.

(c) Brush pressure need not be adjusted if constant force spring is used as shown in Fig. 15 and Fig. 16.

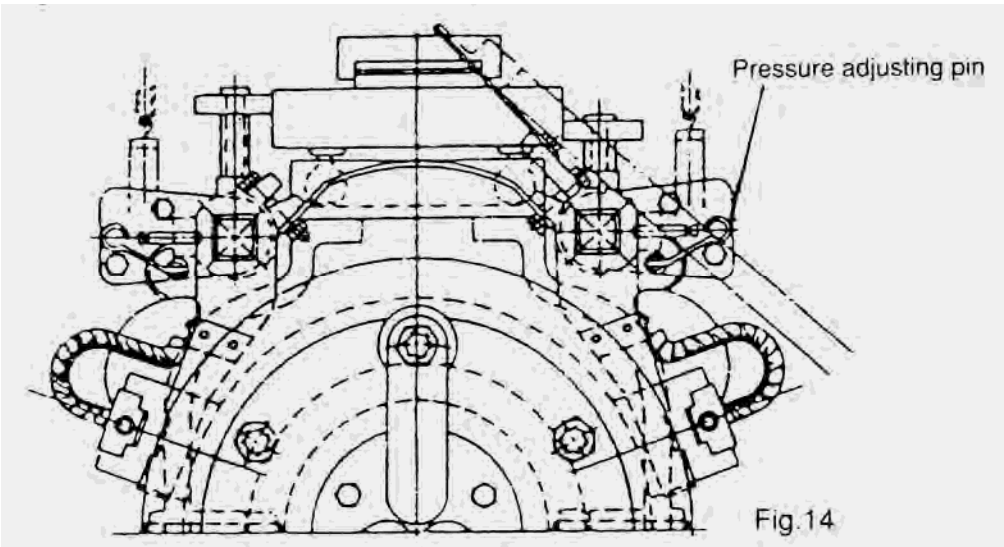

Fig.14

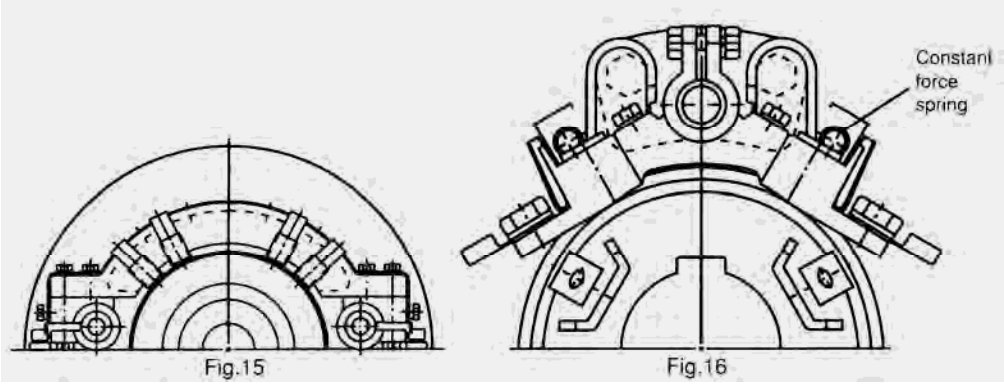

Fig.15 Fig.16

5.7.2 Brush replacement

The carbon brush is a part of the equipment which is easily worn away, replace it after it is worn to ½ ~ ¾ of original size.

(a) Brush material

The brush material is important to the performance of the motor. Only the most appropriate materials are chosen by TWMC, and are listed on the nameplate of the motor. It is important to know this when you replace the brush, so a recommended type is used.

(b) Dimensions

Brush, holder and gap between them, please refer to CNS 2322 C4051 or JIS C2802.

ATTENTION!
The gap between a brush and it holder is important for good performance and safety of the motor.

(c) Adjustment of new brushes (Shown in Fig. 17)

(1) Polish the new brush with a file until is assumes the appropriate contour of the slip ring which it touches.

(2) Place sand-paper (JIS R6252 No. 40…50) on the slip ring with the abrasive face of the paper against the brush to induce a closer contact by rubbing against each other.
(3) Repeat item 2 with fine sand –paper (JIS R6252 No. 100 to 200) until the contact surface between brush and slip ring exceeds 80%.
(4) Finally, clean the contaminated slip ring and brush with clean cloth or compressed air.

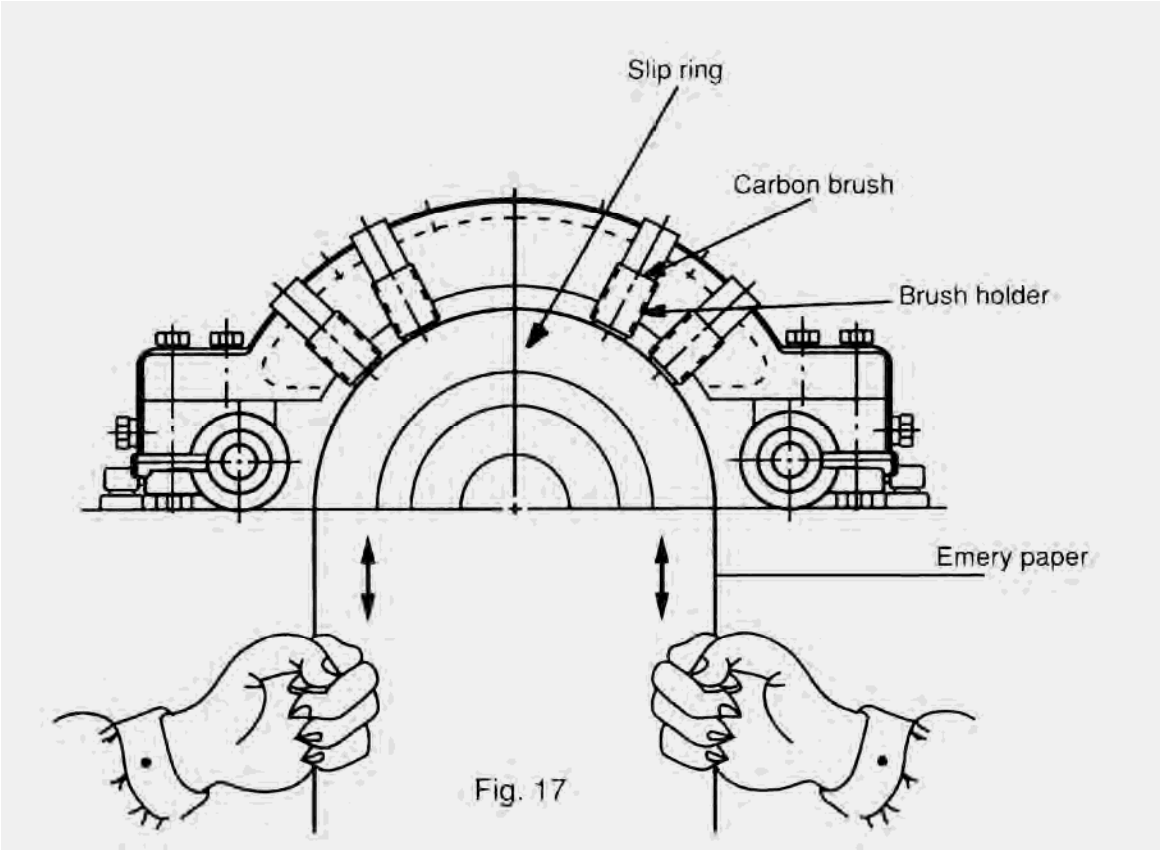

Fig. 17

5.8 Maintenance of non-reverse ratchet mechanism (For Vertical high Thrust Motor only)

5.8.1
In the pump piping system, a check valve and a stop valve should be installed in the discharge line. The check valve, placed between the pump and the stop valve, is to protect the pump from reverse flow and excessive backpressure. The stop valve is used in priming, starting and when shutting down the pump. It is advisable to close the stop valve before stopping the pump. This is especially important when the pump is operated against a high static head.

TWMC vertical high thrust motors are equipped with non-reverse ratchet (N.R.R.) mechanism only when requested by the pump manufacturer. Typical construction of the N.R.R. mechanism is shown as Fig 18 below.

The N.R.R. mechanism keeps the pump and motor from rotating in the reverse direction. Thus prevents damage from over-speeding and damage to water-lubricated pump shaft bearings

when, on shutdown, the falling water column tends to drive the pump in the reverse direction. In normal operation, the ratchet pins are lifted by the ratchet teeth and are held clear by centrifugal force and friction as the motor comes up to speed. When power is removed, the speed decreases and the pins fall. At the instant of reversal, a pin will catch in a ratchet tooth and prevent backward rotation.

5.8.2

The service life of ratchet pins depends not only on the reverse shock load between the pin and ratchet tooth when pump stopped but also the frequency of pump starting and stopping while in service. Provided that the pins are deformed due to this reverse shock load, then the up and down motion of the ratchet pins could be sluggish or jammed and that unusual noises shall arise.

The recommended replacement period for these ratchet pins is every three (3) years. If the reverse shock load is greater than 30% of motor rated torque or the starting frequency is more than twice per day, then the replacement period should be halved.

ATTENTION!
The check valve and stop valve in the discharge line should be regularly inspected and maintained to assure the normal function of these valves. This is important to protect the pump and motor from damage and increase the service life of the N.R.R. mechanism.

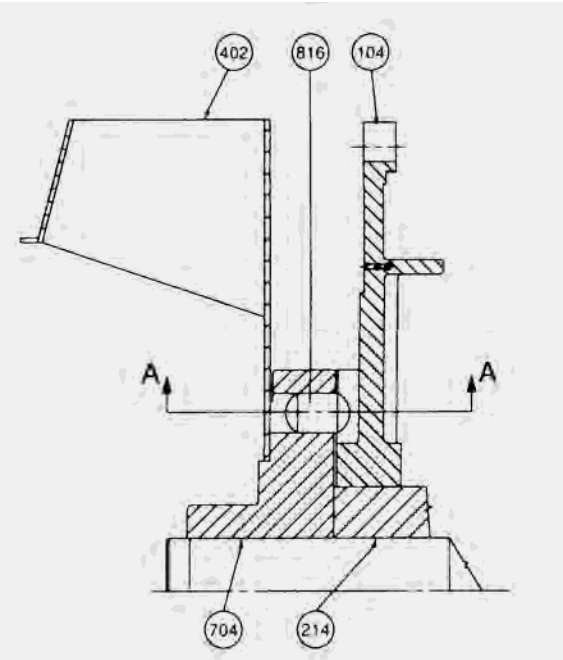

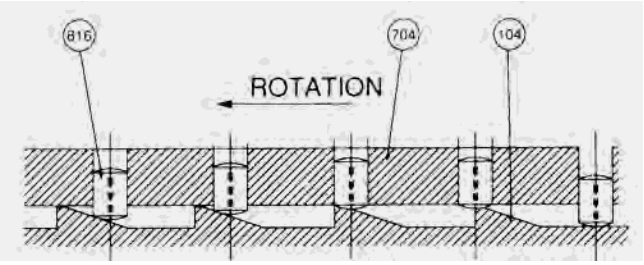

SECTION A-A

ITEM	NAME
104	RATCHET
214	BEARING SEAT
402	EXTERNAL FAN
704	RATCHET PIN CARRIER
816	RATCHET PIN

Fig. 18

6. FAULT FINDING AND RECOGNITION

Kinds of Breakdown	Symptoms	Possible Causes	Remedies
Fail to start without load	Motionless and soundless	Power-off	Consult power company
		Switch-off	Switch-on
		No fuse	Install fuse
		Broken wiring	Check wiring and repair
		Broken lead	Check wiring and repair
		Broken windings	Check windings and repair
	Fuse blowing. (Automatic switch trips off, slow start with electromagnetic noise)	Short circuit of circuit switches	Check circuit switches and replace
		Incorrect wiring	Check wiring according to nameplate
		Poor contact at terminal	Lock tightly
		Windings grounded	Factory repair
		Broken windings	Factory repair
		Poor contact of circuit switches	Check and repair
		Broken wiring	Check and repair
		Poor contact of starting switches	Check and repair
		Short circuit of starting switches	Check and repair
		Incorrect connections of starting switches	Connect according to nameplate
Loading after start	Fuse blowing. Fail to restart due to trip-off of automatic switch	Insufficient capacity of fuse	Replace fuse if wiring permits
		Overload	Lighten load
		High load at low voltage	Check circuit capacity and reduce load
	Overheating motor	Overload or intermittent overload	Lighten load
		Under-voltage	Check circuit capacity and power source
		Over-voltage	Check power source
		Ventilation duct clogged	Remove the foreign matter in the duct
		Ambient temperature exceeds 40°C	Correct insulation class to B or F, or lower ambient temperature
		Friction between rotor and stator	Factory repair
		Fuse blown (Single-phase rotating)	Install the specified fuse
		Poor contact of circuit switches	Check and repair
		Poor contact of circuit starting switches	Check and repair
		Unbalance three-phase voltage	Check circuit or consult power company

Kinds of Breakdown	Symptoms	Possible Causes	Remedies
Loading after start	Speed falls sharply	Voltage drop	Check circuit and powers source
		Sudden overload	Check machine
		Single-phase rotating	Check circuit and repair
	Switch overheat	Insufficient capacity of switch	Replace switch
		High load	Lighten load
	Bearing over-heating	High belt tension	Adjust belt tension
		Slack belt tension	Adjust belt tension
		Misalignment between motor and machine shafts	Re-align
		Over speed of bearing outer-ring	Adjust bracket
		High bearing noise	Replace the damaged bearing
Noise	Electromagnetic noise induced by electricity	Occurrence from its first operation	May be normal
		Sudden sharp noise and smoking	Short circuit of windings should be repaired at the factory
	Bearing noise	Noise of low shishi or Thru-Thru	May be normal
		Kala-Kala as a result of poor lubrication	Grease
		Kulo-Kulo as a result of poor lubrication	Clean bearing and grease
		Sa-Sa or larger noise	Replace the damaged bearing
	Mechanical noise caused by machinery	Loose belt sheave	Adjust key and lock the screw
		Loose coupling or skip	Adjust the position of couplings, lock key and screw
		Loose screw on fan cover	Lock fan cover screw tightly
		Fan rubbing	Adjust fan position
		Rubbing as a result of ingression of foreign matter	Clean motor interior and ventilation ducts
		Wind noise	Noise induced by air flowing through ventilation ducts
		Induced by conveyance machine	Repair machine
Vibration	Electromagnetic vibration	Short circuit of winding	Factory repair
		Open circuit of rotor	Factory repair
	Mechanical vibration	Unbalanced rotor	Factory repair
		Unbalanced fan	Factory repair
		Broken fan blade	Replace fan
		Unsymmetric centers between belt sheaves	Align central points
		Central points of couplings do not lie on the same level	Adjust the central points of couplings to the same level
		Improper mounting installation	Lock the mounting screws
		Motor mounting bed is not strong enough	Reinforce mounting bed

Remarks:

(1) Circuit switches: These include knife switches, electromagnetic switches, fuse and other connection switches etc.

(2) Starting switches: These include Delta-Star starters, compensate starters, reactance starters, resistor starters, starting controller's etc.

APPENDIX C

VSD Series Drives User Manual – November 2009

Powered by **Eaton Technology**

VSD Series Drives

User Manual

November 2009
Supersedes September 2006

November 2009

IMPORTANT NOTICE – PLEASE READ

The product discussed in this literature is subject to terms and conditions outlined in Johnson Controls Inc. selling policies. The sole source governing the rights and remedies of any purchaser of this equipment is the relevant Johnson Controls Inc. selling policy.

NO WARRANTIES, EXPRESS OR IMPLIED, INCLUDING WARRANTIES OF FITNESS FOR A PARTICULAR PURPOSE OR MERCHANTABILITY, OR WARRANTIES ARISING FROM COURSE OF DEALING OR USAGE OF TRADE, ARE MADE REGARDING THE INFORMATION, RECOMMENDATIONS AND DESCRIPTIONS CONTAINED HEREIN. In no event will Johnson Controls Inc. or Eaton Electrical Inc. be responsible to the purchaser or user in contract, in tort (including negligence), strict liability or otherwise for any special, indirect, incidental or consequential damage or loss whatsoever, including but not limited to damage or loss of use of equipment, plant or power system, cost of capital, loss of power, additional expenses in the use of existing power facilities, or claims against the purchaser or user by its customers resulting from the use of the information, recommendations and descriptions contained herein.

The information contained in this manual is subject to change without notice.

Cover Photo: Johnson Controls VSD Series Drive.

November 2009

November 2009

Table of Contents

LIST OF FIGURES v

LIST OF TABLES vii

SAFETY ISSUES
- Definitions and Symbols. x
- Hazardous High Voltage x
- Warnings, Cautions and Notices xi

CHAPTER 1 — OVERVIEW
- How to Use This Manual. 1-1
- Receiving and Inspection 1-1
- Catalog Numbering System 1-2

CHAPTER 2 — MOUNTING OPEN TYPE 1, TYPE 12 DRIVES
- Space Requirements 2-1
- Environmental Requirements. 2-2
- Standard Mounting Instructions 2-2

CHAPTER 3 — POWER WIRING
- Guidelines 3-1
- UL Compatible Cable Selection and Installation 3-2
- Installation Instructions. 3-4
- Standard Wiring Diagrams and Terminal Locations 3-6
- Checking the Cable and Motor Insulation 3-9

CHAPTER 4 — CONTROL WIRING
- General Information 4-1

CHAPTER 5 — INTELLIPASS BYPASS OPTION
- Product Description. 5-1
- Catalog Number Selection 5-2
- IntelliPass Control Wiring Instructions 5-16

CHAPTER 6 — MENU INFORMATION
- Keypad Operation 6-1
- Main Menu Navigation 6-4

CHAPTER 7 — START-UP
- Safety Precautions. 7-1
- Sequence of Operation 7-2

CHAPTER 8 — N2, XT, AND SA BUS COMMUNICATION

CHAPTER 9 — REMOTE INPUT APPLICATION (SVCHS200)
- Introduction 9-1
- Control Input/Output 9-2
- Parameter Lists 9-3

CHAPTER 10 — GENERIC PI APPLICATION (SVCHS201)
- Introduction 10-1
- Control Input/Output 10-2
- Parameter Lists 10-3

CHAPTER 11 — DUCT STATIC APPLICATION (SVCHS202)
- Introduction 11-1
- Control Input/Output 11-2
- Parameter Lists 11-3

Table of Contents, continued

CHAPTER 12 — BUILDING STATIC APPLICATION (SVCHS203)
Introduction 12-1
Control Input/Output 12-2
Parameter Lists. 12-3

CHAPTER 13 — PRESSURE CONTROL APPLICATION (SVCHS204)
Introduction 13-1
Control Input/Output 13-2
Parameter Lists. 13-3

CHAPTER 14 — TEMPERATURE CONTROL APPLICATION (SVCHS205)
Introduction 14-1
Control Input/Output 14-2
Parameter Lists. 14-3

CHAPTER 15 — DESCRIPTION OF PARAMETERS
Parameters by ID Number. 15-1
Keypad Control Parameters 15-28

APPENDIX A — TECHNICAL DATA
Specifications A-1
Power Ratings. A-3
Power Loss and Switching Frequency A-4
Dimensions. A-8
EMC Capability A-15
Declaration of Conformity A-15
Warranty and Liability Information. A-16

APPENDIX B — FAULT AND WARNING CODES

APPENDIX C — ACCESSORIES
RS-232 Cables Used with VS Drives. C-1

APPENDIX D — WIRING DIAGRAMS

List of Figures

Figure 2-1: Mounting Space Requirements 2-1
Figure 3-1: Input Power and Motor Cable Stripping and Wire Lengths 3-4
Figure 3-2: 3-5
Figure 3-3: Principle Wiring Diagram of VSD Series Power Unit, FR4, FR5 and FR6 3-6
Figure 3-4: 3-8
Figure 3-5: Option Board A9 Location and Settings 3-8
Figure 4-1: Option Board Slots 4-1
Figure 4-2: Option Board A2 Terminal Locations 4-2
Figure 4-3: Positive/Negative Logic 4-2
Figure 5-1: Identification of NEMA Type 1 Components 5-4
Figure 5-2: VSD Series IntelliPass/IntelliDisconnect Drive Dimensions 5-4
Figure 5-3: VSD Series IntelliPass with Three Contactors 5-7
Figure 5-4: Identification of NEMA Type 12 and NEMA Type 3R Components 5-9
Figure 5-5: VSD Series Enclosed Drive Dimensions 5-9
Figure 5-6: 5-12
Figure 5-7: Schematic for Static Checks (Sample for Frames 4 and 5) 5-15
Figure 5-8: Option Board B5 Wiring Diagram 5-16
Figure 5-9: Option Board B5 Terminal Location 5-17
Figure 5-10: Enable Bypass 5-17
Figure 6-1: Keypad and Display 6-1
Figure 6-2: Operate Menu Navigation 6-1
Figure 6-3: Main Menu Navigation 6-5
Figure 6-4: Parameter Menu Structure Example 6-6
Figure 6-5: Keypad Control Menu 6-7
Figure 6-6: Active Fault Display Example 6-8
Figure 6-7: Sample Fault History Display 6-10
Figure 6-8: System Menu Keypad Structure 6-11
Figure 6-9: Expander Board Menu Structure 6-19
Figure 6-10: Digital Inputs — DI-1, DI-2, DI-3 Status 6-20
Figure 6-11: Digital Inputs — DI-4, DI-5, DI-6 Status 6-21
Figure 6-12: Digital and Relay Outputs — DO-1, RO-1, RO-2 Status 6-21
Figure 7-1: Start-Up Wizard Navigation (1 of 3) 7-4
Figure 7-2: Start-Up Wizard Navigation (2 of 3) 7-5
Figure 7-3: Start-Up Wizard Navigation (3 of 3) 7-6
Figure 7-4: Remote Input Start-Up Wizard 7-7
Figure 15-1: AI-1 No Signal Inversion 15-4
Figure 15-2: AI-1 Signal Inversion 15-4
Figure 15-3: AI-1 No Signal Filtering 15-5
Figure 15-4: Analog Input AI-2 Scaling 15-5
Figure 15-5: Setpoint Scaling 15-6
Figure 15-6: Sensor Scaling 15-6
Figure 15-7: Analog Output Filtering 15-7
Figure 15-8: Analog Output Invert 15-8
Figure 15-9: Analog Output Scaling 15-9
Figure 15-10: Output Frequency Supervision 15-11
Figure 15-11: Acceleration/Deceleration (S-shaped) 15-13
Figure 15-12: Example of Prohibit Frequency Area Setting 15-14
Figure 15-13: Ramp Speed Scaling between Prohibit Frequencies 15-15
Figure 15-14: Linear and Squared V/Hz Ratio 15-17
Figure 15-15: Programmable V/Hz Curve 15-17
Figure 15-16: Motor Thermal Current IT Curve 15-21

List of Figures, continued

Figure 15-17: Motor Temperature Calculation 15-22
Figure 15-18: Stall Characteristics Settings 15-23
Figure 15-19: Stall Time Count 15-23
Figure 15-20: Setting of Minimum Load 15-24
Figure 15-21: Underload Time Counter Function 15-25
Figure 15-22: Auto Acceleration/Deceleration (S-shaped) 15-27
Figure A-1: Power Loss as Function of Switching Frequency:
1 – 3 hp 230V, 1-1/2 – 7-1/2 hp 480V A-5
Figure A-2: Power Loss as Function of Switching Frequency:
5 – 10 hp 230V, 10 – 20 hp 480V A-5
Figure A-3: Power Loss as Function of Switching Frequency:
15 – 20 hp 230V, 25 – 40 hp 480V A-6
Figure A-4: Power Loss as Function of Switching Frequency:
25 – 40 hp 230V, 50 – 75 hp 480V A-6
Figure A-5: Power Loss as Function of Switching Frequency:
50 – 75 hp 230V, 100 – 150 hp 480V A-7
Figure A-6: Power Loss as Function of Switching Frequency:
200 – 250 hp 480V A-7
Figure A-7: TYPE 1 and TYPE 12 VSD Series Open Drive Dimensions,
FR4, FR5 and FR6 . . . . . A-8
Figure A-8: VSD Series Open Drive Dimensions, TYPE 1 and TYPE 12
with Flange Kit, FR4, FR5 and FR6 . . . . . A-9
Figure A-9: VSD Series Open Drive Dimensions, TYPE 1 and TYPE 12, FR7 . . . . . A-10
Figure A-10: VSD Series Open Drive Dimensions, TYPE 1 and TYPE 12, FR8 . . . . . A-11
Figure A-11: VSD Series Open Drive Dimensions, TYPE 1 and TYPE 12,
with Flange Kit, FR7 and FR8 . . . . . A-12
Figure A-12: VSD Series Open Drive Dimensions, OPEN 1 and OPEN 12 FR9 . . . . . A-13
Figure A-13: VSD Series Open Drive Dimensions, TYPE 1 and TYPE 12 FR9
with Flange Kit A-14
Figure C-1: RS-232 Cable for Parameter Setting or
Software Downloading by Using PC C-1
Figure C-2: Connection of Cable Used with Keypad C-1
Figure C-3: RS-232 Cable C-2
Figure D-1: VSD Series IntelliPass with Three Contactors D-1
Figure D-2: VSD Series IntelliPass Disconnect D-2

List of Tables

Table 1-1: VSD Series Open Drives Selection Chart 1-2
Table 2-1: Space Requirements for Mounting a VSD Series Drive 2-1
Table 2-2: Cooling Airflow Requirements 2-2
Table 3-1: Cable Spacings 3-1
Table 3-2: Cable and Fuse Sizes — 208 – 240V Ratings ② 3-2
Table 3-3: Cable and Fuse Sizes — 380 – 500V Ratings ⑤ 3-2
Table 3-4: Cable and Fuse Sizes — 525 – 690V Ratings ② 3-3
Table 3-5: Maximum Symmetrical Supply Current 3-3
Table 3-6: Power Connection Tightening Torque 3-3
Table 3-7: Power and Motor Cable Stripping Lengths 3-4
Table 3-8: Control Wiring Instructions — NEMA Type 1/12 Open Drives 3-5
Table 4-1: Option Board A2 Terminal Descriptions 4-2
Table 5-1: VSD Series IntelliPass/IntelliDisconnect Drives Selection Chart 5-2
Table 5-2: VSD Series Enclosed Drives Selection Chart 5-3
Table 5-3: Options List 5-3
Table 5-4: Option Notes 5-3
Table 5-5: VSD Series NEMA Type 1 IntelliPass/IntelliDisconnect Drive Dimensions 5-4
Table 5-6: Bypass Power Wiring Instructions — NEMA Type 1 IntelliPass/IntelliDisconnect Drive 5-5
Table 5-7: VSD Series NEMA Type 12 Enclosed IntelliPass Drive Dimensions 5-9
Table 5-8: VSD Series NEMA Type 3R Enclosed IntelliPass Drive Dimensions 5-9
Table 5-9: Bypass Power Wiring Instructions — Enclosed NEMA Type 12/3R 5-10
Table 5-10: Static Checks of Converter 5-14
Table 5-11: Static Checks of Inverter 5-14
Table 5-12: Static Checks of DC Bus 5-15
Table 5-13: Option Board B5 Terminal Descriptions 5-16
Table 6-1: LCD Status Indicators 6-2
Table 6-2: LED Status Indicators 6-2
Table 6-3: Navigation Buttons 6-3
Table 6-4: Fault Types 6-9
Table 6-5: Fault Time Data 6-9
Table 6-6: Total Counters 6-16
Table 6-7: Trip Counters 6-17
Table 6-8: Software Information 6-17
Table 6-9: Application Information 6-17
Table 6-10: Hardware Information 6-18
Table 6-11: Expander Board Information 6-18
Table 6-12: Drive Output Phase Current Measurement 6-18
Table 6-13: Monitoring Menu Items — Generic PI Application Example 6-20
Table 6-14: Operate Menu Items — Generic PI Application Example 6-21
Table 9-1: Remote Input Application Default I/O Configuration 9-2
Table 9-2: Quick Setup Parameters — M1 ➔ G1.1 9-3
Table 9-3: Input Signals — M1 ➔ G1.2 9-5
Table 9-4: Output Signals — M1 ➔ G1.3 9-8
Table 9-5: Drive Control Parameters — M1 ➔ G1.4 9-10
Table 9-6: Prohibit Frequencies — M1 ➔ G1.5 9-11
Table 9-7: Motor Control Parameters — M1 ➔ G1.6 9-12
Table 9-8: Protections — M1 ➔ G1.7 9-13

List of Tables, continued

Table 9-9: Fieldbus Parameters — M1 ➔ G1.8 9-14
Table 9-10: Preset Speeds — M1 ➔ G1.10 9-15
Table 9-11: Keypad Control Parameters — M2 9-16
Table 9-12: Monitoring Menu 9-16
Table 10-1: Generic PI Application Default I/O Configuration 10-2
Table 10-2: Quick Setup Parameters — M1 ➔ G1.1 10-3
Table 10-3: Input Signals — M1 ➔ G1.2 10-5
Table 10-4: Output Signals — M1 ➔ G1.3 10-8
Table 10-5: Drive Control Parameters — M1 ➔ G1.4 10-10
Table 10-6: Prohibit Frequencies — M1 ➔ G1.5 10-11
Table 10-7: Motor Control Parameters — M1 ➔ G1.6 10-12
Table 10-8: Protections — M1 ➔ G1.7 10-13
Table 10-9: Fieldbus Parameters — M1 ➔ G1.8 10-14
Table 10-10: PI-Control Parameters — M1 ➔ G1.9 10-16
Table 10-11: Preset Speeds — M1 ➔ G1.10 10-16
Table 10-12: Keypad Control Parameters — M2 10-17
Table 10-13: Monitoring Menu 10-17
Table 11-1: Duct Static Application Default I/O Configuration 11-2
Table 11-2: Quick Setup Parameters — M1 ➔ G1.1 11-3
Table 11-3: Input Signals — M1 ➔ G1.2 11-5
Table 11-4: Output Signals — M1 ➔ G1.3 11-8
Table 11-5: Drive Control Parameters — M1 ➔ G1.4 11-10
Table 11-6: Prohibit Frequencies — M1 ➔ G1.5 11-11
Table 11-7: Motor Control Parameters — M1 ➔ G1.6 11-12
Table 11-8: Protections — M1 ➔ G1.7 11-13
Table 11-9: Fieldbus Parameters — M1 ➔ G1.8 11-14
Table 11-10: PI-Control Parameters — M1 ➔ G1.9 11-16
Table 11-11: Preset Speeds — M1 ➔ G1.10 11-16
Table 11-12: Keypad Control Parameters — M2 11-17
Table 11-13: Monitoring Menu 11-18
Table 12-1: Building Static Application Default I/O Configuration 12-2
Table 12-2: Quick Setup Parameters — M1 ➔ G1.1 12-3
Table 12-3: Input Signals — M1 ➔ G1.2 12-5
Table 12-4: Output Signals — M1 ➔ G1.3 12-8
Table 12-5: Drive Control Parameters — M1 ➔ G1.4 12-10
Table 12-6: Prohibit Frequencies — M1 ➔ G1.5 12-11
Table 12-7: Motor Control Parameters — M1 ➔ G1.6 12-12
Table 12-8: Protections — M1 ➔ G1.7 12-13
Table 12-9: Fieldbus Parameters — M1 ➔ G1.8 12-14
Table 12-10: PI-Control Parameters — M1 ➔ G1.9 12-16
Table 12-11: Preset Speeds — M1 ➔ G1.10 12-16
Table 12-12: Keypad Control Parameters — M2 12-17
Table 12-13: Monitoring Menu 12-18
Table 13-1: Pressure Control Application Default I/O Configuration 13-2
Table 13-2: Quick Setup Parameters — M1 ➔ G1.1 13-3
Table 13-3: Input Signals — M1 ➔ G1.2 13-5
Table 13-4: Output Signals — M1 ➔ G1.3 13-8
Table 13-5: Drive Control Parameters — M1 ➔ G1.4 13-10
Table 13-6: Prohibit Frequencies — M1 ➔ G1.5 13-11
Table 13-7: Motor Control Parameters — M1 ➔ G1.6 13-12

List of Tables, continued

Table 13-8: Protections — M1 ➔ G1.7 13-13
Table 13-9: Fieldbus Parameters — M1 ➔ G1.8 13-14
Table 13-10: PI-Control Parameters — M1 ➔ G1.9 13-16
Table 13-11: Preset Speeds — M1 ➔ G1.10 13-16
Table 13-12: Keypad Control Parameters — M2 13-17
Table 13-13: Monitoring Menu 13-18
Table 14-1: Temperature Control Application Default I/O Configuration 14-2
Table 14-2: Quick Setup Parameters — M1 ➔ G1.1 14-3
Table 14-3: Input Signals — M1 ➔ G1.2 14-5
Table 14-4: Output Signals — M1 ➔ G1.3 14-8
Table 14-5: Drive Control Parameters — M1 ➔ G1.4 14-10
Table 14-6: Prohibit Frequencies — M1 ➔ G1.5 14-11
Table 14-7: Motor Control Parameters — M1 ➔ G1.6 14-12
Table 14-8: Protections — M1 ➔ G1.7 14-13
Table 14-9: Fieldbus Parameters — M1 ➔ G1.8 14-14
Table 14-10: PI-Control Parameters — M1 ➔ G1.9 14-16
Table 14-11: Preset Speeds — M1 ➔ G1.10 14-16
Table 14-12: Keypad Control Parameters — M2 14-17
Table 14-13: Monitoring Menu 14-18
Table 15-1: Selections for IDs 112, 113, 114 and 115 15-2
Table 15-2: Analog Output Scaling 15-8
Table 15-3: Output Signals Via DO-1 and Output Relays RO-1 and RO-2 15-9
Table 15-4: Size-Dependent Switching Frequencies 15-18
Table 15-5: Fieldbus Parameters 15-26
Table 15-6: Preset Speeds 15-28
Table A-1: VSD Series Drive Specifications A-1
Table A-2: 230V VT Output Power Ratings A-3
Table A-3: 480V VT Output Power Ratings A-3
Table A-4: 575V VT Output Power Ratings A-4
Table A-5: VSD Series Open Drive Dimensions A-8
Table A-6: Dimensions for VSD Series Open Drive, FR4, FR5 and FR6 with Flange Kit A-9
Table A-7: Dimensions for the Flange Opening, FR4 to FR6 . . . . . A-9
Table A-8: VSD Series Open Drive Dimensions, FR7 . . . . . A-10
Table A-9: VSD Series Open Drive Dimensions, FR8 . . . . . A-11
Table A-10: Dimensions for VSD Series Open Drive, FR7 and FR8 with Flange Kit A-12
Table A-11: Dimensions for the Flange Opening, FR7/FR8 . . . . . A-12
Table A-12: Dimensions for VSD Series Open Drive, FR9 . . . . . A-13
Table A-12: Dimensions for VSD Series Open Drive, FR9, continued A-13
Table A-13: Dimensions for VSD Series Open Drive, FR9 with Flange Kit A-14
Table B-1: Fault Codes B-1

Safety Issues

Definitions and Symbols

WARNING

This symbol indicates high voltage. It calls your attention to items or operations that could be dangerous to you and other persons operating this equipment. Read the message and follow the instructions carefully.

This symbol is the "Safety Alert Symbol." It occurs with either of two signal words: WARNING or CAUTION as described below.

WARNING

Indicates a potentially hazardous situation which, if not avoided, can result in serious injury or death.

CAUTION

Indicates a potentially hazardous situation which, if not avoided, can result in minor to moderate injury, or serious damage to the equipment. The situation described in the CAUTION may, if not avoided, lead to serious results. Important safety measures are described in CAUTION (as well as WARNING).

Hazardous High Voltage

WARNING

Motor control equipment and electronic controllers are connected to hazardous line voltages. When servicing drives and electronic controllers, there may be exposed components with housings or protrusions at or above line potential. Extreme care should be taken to protect against shock.

- Stand on an insulating pad and make it a habit to use only one hand when checking components.
- Always work with another person in case an emergency occurs.
- Disconnect power before checking controllers or performing maintenance.
- Be sure equipment is properly grounded.
- Wear safety glasses whenever working on electronic controllers or rotating machinery.

Warnings, Cautions and Notices

Read this manual thoroughly and make sure you understand the procedures before you attempt to install, set up or operate this Johnson Controls VSD Series Variable Speed Drive powered by Cutler-Hammer® technology from Eaton's electrical business.

Warnings

WARNING

Be sure to ground the unit following the instructions in this manual. Ungrounded units may cause electric shock and/or fire.

WARNING

This equipment should be installed, adjusted, and serviced by qualified electrical maintenance personnel familiar with the construction and operation of this type of equipment and the hazards involved. Failure to observe this precaution could result in death or severe injury.

WARNING

Components within the VSD Series power unit are live when the drive is connected to power. Contact with this voltage is extremely dangerous and may cause death or severe injury.

WARNING

Line terminals (L1, L2, L3), motor terminals (U, V, W) and the DC-link/brake resistor terminals (-/+) are live when the drive is connected to power, even if the motor is not running. Contact with this voltage is extremely dangerous and may cause death or severe injury.

WARNING

Even though the control I/O-terminals are isolated from line voltage, the relay outputs and other I/O-terminals may have dangerous voltage present even when the drive is disconnected from power. Contact with this voltage is extremely dangerous and may cause death or severe injury.

WARNING

The VSD Series drive has a large capacitive leakage current during operation, which can cause enclosure parts to be above ground potential. Proper grounding, as described in this manual, is required. Failure to observe this precaution could result in death or severe injury.

WARNING

Before applying power to the VSD Series drive, make sure that the front and cable covers are closed and fastened to prevent exposure to potential electrical fault conditions. Failure to observe this precaution could result in death or severe injury.

WARNING

An upstream disconnect/protective device must be provided as required by the National Electric Code (NEC). Failure to follow this precaution may result in death or severe injury.

WARNING

Before opening the VSD Series drive covers:

- Disconnect all power to the VSD Series drive.
- Wait a minimum of 5 (five) minutes after all the lights on the keypad are off. This allows time for the DC bus capacitors to discharge.
- A hazardous voltage may still remain in the DC bus capacitors even if the power has been turned off. Confirm that the capacitors have fully discharged by measuring their voltage using a multimeter set to measure DC voltage.

Failure to follow the above precautions may cause death or severe injury.

WARNING

The VSD Series output terminals U, V and W correspond to a phase rotation of ABC. If the input terminals L1, L2 and L3 have not been wired for ABC, the motor rotation will be different when powered from the bypass instead of the VSD Series drive which can result in personal injury and equipment damage. In this situation the input line wiring must be changed to correspond to ABC rotation.

Cautions

CAUTION

Do not perform any Megger or voltage withstand tests on any part of the VSD Series drive or its components. Improper testing may result in damage.

CAUTION

Prior to any tests or measurements of the motor or the motor cable, disconnect the motor cable at the VSD Series output terminals (U, V, W) to avoid damaging the VSD Series drive during the motor or cable testing.

CAUTION

Do not touch any components on the circuit boards. Static voltage discharge may damage the components.

CAUTION

Any electrical or mechanical modification to this equipment without prior written consent of Johnson Controls will void all warranties and may result in a safety hazard in addition and voiding of the UL listing.

CAUTION

Install the VSD Series drive on flame-resistant material such as a steel plate to reduce the risk of fire.

CAUTION

Install the VSD Series drive on a perpendicular surface that is able to support the weight of the drive and is not subject to vibration, to lessen the risk of the drive falling and being damaged and/or causing personal injury.

CAUTION

Prevent foreign material such as wire clippings or metal shavings from entering the drive enclosure, as this may cause arcing damage and fire.

CAUTION

Install the VSD Series drive in a well-ventilated room that is not subject to temperature extremes, high humidity, or condensation, and avoid locations that are directly exposed to sunlight, or have high concentrations of dust, corrosive gas, explosive gas, inflammable gas, grinding fluid mist, etc. Improper installation may result in a fire hazard.

Motor and Equipment Safety

CAUTION

Before starting the motor, check that the motor is mounted properly and aligned with the driven equipment. Ensure that starting the motor will not cause personal injury or damage equipment connected to the motor.

CAUTION

Set the maximum motor speed (frequency) in the VSD Series drive according to the requirements of the motor and the equipment connected to it. Incorrect maximum frequency settings can cause motor or equipment damage and the potential for personal injury.

CAUTION

Before reversing the motor rotation, ensure that this will not cause personal injury or equipment damage.

CAUTION

Make sure that no power factor correction capacitors are connected to the VSD Series output or the motor terminals to prevent VSD Series drive malfunction and potential damage.

CAUTION

Make sure that the VSD Series output terminals (U, V, W) are not connected to the utility line power as severe damage to the VSD Series drive and personal injury may occur.

November 2009

November 2009

Chapter 1 — Overview

This chapter describes the purpose and contents of this manual, the receiving inspection recommendations and the Johnson Controls VSD Series Open Drive catalog numbering system.

How to Use This Manual

The purpose of this manual is to provide you with information necessary to install, set and customize parameters, start up, troubleshoot and maintain the Johnson Controls VSD Series drive powered by Cutler-Hammer® technology from Eaton's electrical business. To provide for safe installation and operation of the equipment, read the safety guidelines at the beginning of this manual and follow the procedures outlined in the following chapters before connecting power to the VSD Series drive. Keep this operating manual handy and distribute to all users, technicians and maintenance personnel for reference.

Chapter 1 – Overview
Chapter 2 – Mounting
Chapter 3 – Power Wiring
Chapter 4 – Control Wiring
Chapter 5 – IntelliPass Bypass Option
Chapter 6 – Menu Information
Chapter 7 – Start-Up
Chapter 8 – Johnson Controls Metasys N2 Protocol
Chapter 9 to 14 – Applications
Chapter 15 – Description of Parameters
Appendix A – Technical Data
Appendix B – Fault and Warning Codes
Appendix C – Accessories

Receiving and Inspection

The VSD Series AC drive has met a stringent series of factory quality requirements before shipment. It is possible that packaging or equipment damage may have occurred during shipment. After receiving your VSD Series drive, please check for the following:

- Check to make sure that the package(s) includes the VSD Series drive, the User Manual, rubber conduit covers, screws, conduit plate and ground straps.
- Inspect the unit to ensure it was not damaged during shipment.
- Make sure that the part number indicated on the nameplate corresponds with the Catalog Number on your order.

If shipping damage has occurred, please contact and file a claim with the carrier involved immediately.

If the delivery does not correspond to your order, please contact your Johnson Controls representative.

Note: Do not destroy the packing. The template printed on the protective cardboard can be used for marking the mounting points of the VSD Series on the wall or cabinet.

Catalog Numbering System

Table 1-1: VSD Series Open Drives Selection Chart

	Code Number	V	S						0	A	-	N	0	0	0	0
Base Product	VS = Variable Speed Drive Prefix															
Horsepower (VT) ①	001 = 1.0 hp to 250 = 250 hp ②															
Voltage ③	2 = 230V (or 208V) 4 = 480V 5 = 575V															
Enclosure Rating	1 = TYPE 1 2 = TYPE 12															
Enclosure Style	0 = None (Open Drive)															
Revision #	A = Rev 1 (Americas) C = Rev 1 (Canada)															
Separator (–)																
Communications ④	0 = None N = N2/XT/SA⑤ Bus Comm (N2 by default) L = LonWorks® Network															
Option 1	00 = None															
Option 2	00 = None															

① All horsepower ratings are Variable Torque (VT).
② 3 to 200 @ 575V; 1-1/2 to 250 hp @ 480V; 1 to 100 hp @ 230V.
③ Voltage Ratings: 230V = 208 – 240V; 480V = 380 – 500V; 575V = 525 – 690V.
④ N2/XT Communications selectable on drive keypad.
⑤ SA = Sensor Actuator Bus for FEC Interface.

Johnson Controls Open Drive
TYPE 1 & TYPE 12, 208 – 240V, 380 – 500V, 525 – 690V

Chapter 2 — Mounting Open TYPE 1, TYPE 12 Drives

VSD Series open drives may be mounted side-by-side or stacked vertically, as outlined in the following section.

Note: See **Chapter 5** for mounting TYPE 1, TYPE 12 and TYPE 3R IntelliPass drives.

Space Requirements

To ensure proper air circulation and cooling, follow the guidelines below.

Table 2-1: Space Requirements for Mounting a VSD Series Drive

Drive Type Variable Torque Rating	Approximate Dimensions in Inches (mm) ①				
	A	A_2	B	C	D
230V, 1 – 3 hp 480V, 1-1/2 – 7-1/2 hp	0.8 (20)		0.8 (20)	3.9 (100)	2.0 (50)
230V, 5 – 10 hp 480V, 10 – 20 hp	0.8 (20)		0.8 (20)	4.7 (120)	2.4 (60)
230V, 15 – 20 hp 480V, 25 – 40 hp 575V, 3 – 30 hp	1.2 (30)		1.2 (30)	6.3 (160)	3.1 (80)
230V, 25 – 40 hp 480V, 50 – 75 hp 575V, 40 – 50 hp	3.1 (80)		3.1 (80)	11.8 (300)	3.9 (100)
230, 50 – 75 hp 480V, 100 – 150 hp 575V, 60 – 100 hp	3.1 (80)	5.9 (150)	3.1 (80)	11.8 (300)	7.9 (200)
230V, 100 hp 480V, 200 – 250 hp 575V, 125 – 200 hp	2.0 (50)		3.1 (80)	15.7 (400)	9.8 (250) 13.8 ② (350)

① Dimensions represent the minimum clearance needed when mounting a drive. See **Figure 2-1** below.
A = clearance around the VSD Series drive.
A_2 = clearance needed to change the fan without disconnecting the motor cables.
B = distance between adjacent VSD Series drives or between the VSD Series drive and an enclosure wall.
C = clearance above the VSD Series drive.
D = clearance below the VSD Series drive.
② Minimum clearance below the VSD Series drive needed to change the fan.

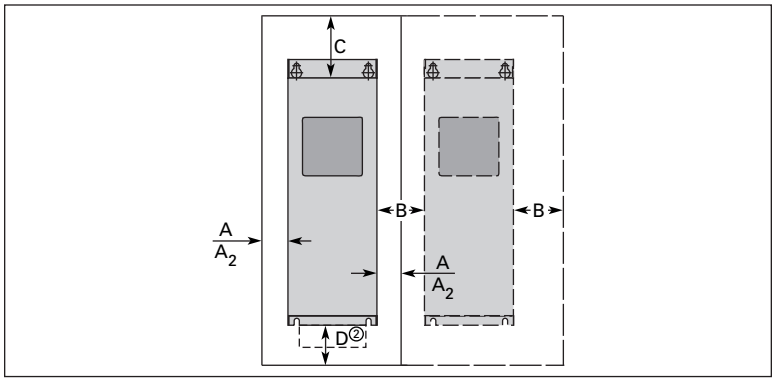

Figure 2-1: Mounting Space Requirements

If several units are mounted above each other, the clearance between the drives should equal C + D (see **Table 2-1** and **Figure 2-1** above). In addition, the outlet air used for cooling the lower unit must be directed away from the inlet air used by the upper unit.

Environmental Requirements

Ensure that the environment meets the requirements listed in **Table A-1** of **Appendix A** for any storage or operating situation.

The following table specifies the minimum airflow required in the area where the drive will be mounted.

Table 2-2: Cooling Airflow Requirements

Drive Type Variable Torque Ratings	Cooling Air Required
230V, 1 – 3 hp 480V, 1-1/2 – 7-1/2 hp	41 cfm (70 m^3/h)
230V, 5 – 10 hp 480V, 10 – 20 hp	112 cfm (190 m^3/h)
230V, 15 – 20 hp 480V, 25 – 40 hp 575V, 3 – 30 hp	250 cfm (425 m^3/h)
230V, 25 – 40 hp 480V, 50 – 75 hp 575V, 40 – 50 hp	250 cfm (425 m^3/h)
230V, 50 – 75 hp 480V, 100 – 150 hp 575V, 60 – 100 hp	383 cfm (650 m^3/h)
230V, 100 hp 480V, 200 – 250 hp 575V, 125 – 200 hp	765 cfm (1300 m^3/h)

Standard Mounting Instructions

1. Measure the mounting space to ensure that it allows for the minimum space surrounding the VSD Series drive. Drive dimensions are in **Appendix A**.
2. Make sure the mounting surface is flat and strong enough to support the drive, is not flammable, and is not subject to excessive motion or vibration.
3. Ensure that the minimum airflow requirements for your drive are met at the mounting location.
4. Mark the location of the mounting holes on the mounting surface, using the template provided on the cover of the cardboard shipping package.
5. Using fasteners appropriate to your drive and mounting surface, securely attach the drive to the mounting surface using all 4 screws or bolts.

Chapter 3 — Power Wiring

Guidelines

To ensure proper wiring, use the following guidelines:

- Use heat-resistant copper cables only, +75°C or higher.
- The input line cable and line fuses must be sized in accordance with the rated input current of the unit. See **Tables 3-2** and **3-5**.
- Consistent with UL listing requirements, for maximum protection of the VSD Series drive, UL recognized fuses type RK should be used.
- If motor temperature sensing is used for overload protection, the output wire size may be selected based on the motor specifications.
- If three or more shielded cables are used in parallel for the output on the larger units, every cable must have its own overload protection.
- Avoid placing the motor cables in long parallel lines with other cables.
- If the motor cables run in parallel with other cables, note the minimum distances between the motor cables and other cables given in **Table 3-1** below:

Table 3-1: Cable Spacings

Minimum Distance Between Cables in Feet (m)	Shielded Cable Length in Feet (m)
1 (0.3)	≤164 (50)
3.3 (1.0)	≤656 (200)

- The spacings of **Table 3-1** also apply between the motor cables and signal cables of other systems.
- Maximum length of the motor cables is as follows:
  - 1 – 2 hp 230V units, 328 ft. (100m); filters required **on lead length ≥175 ft**.
  - All other hp units, 984 ft. (300m); filters required **on lead length ≥200 ft**.

    Note: Lead lengths ≥500 ft. require sine wave filter for all voltages.
- The motor cables should cross other cables at an angle of 90 degrees.
- If conduit is being used for wiring, use separate conduits for the input power wiring, the output power wiring, the signal wiring, and the control wiring.
- For Frame 4 installations, refer to conduit mounting requirements in **Chapter 4**.

UL Compatible Cable Selection and Installation

Use only copper wire with temperature rating of at least 167°F (75°C).

Table 3-2: Cable and Fuse Sizes — 208 – 240V Ratings ②

hp	Frame Size	NEC I_I (A)	I_I (A)	Fuse (A) ①③	Wire Size		Terminal Size	
					Power	Ground	Power	Ground
1	FR4	4.2	4.8	10	14	14	16 – 12	16 – 14
1-1/2	FR4	6	6.6	10	14	14	16 – 12	16 – 14
2	FR4	6.8	7.8	10	14	14	16 – 12	16 – 14
3	FR4	9.6	11	15	14	14	16 – 12	16 – 14
5	FR5	15.2	17.5	20	12	12	16 – 8	16 – 8
7-1/2	FR5	22	25	30	10	10	16 – 8	16 – 8
10	FR5	28	31	40	8	8	16 – 8	16 – 8
15	FR6	42	48	60	4	8	14 – 0	10 – 2
20	FR6	54	61	80	2	6	14 – 0	10 – 2
25	FR7	68	75	100	2	6	14 – 0	10 – 00
30	FR7	80	88	110	1	6	14 – 0	10 – 00
40	FR7	104	114	125	1/0	4	14 – 0	10 – 00
50	FR8	130	140	175	3/0	2	4-3/0	4-000
60	FR8	154	170	200	4/0	0	000-350 MCM	4-000
75	FR8	192	205	250	300	2/0	000-350 MCM	4-000
100	FR9	248	261	300	2 x 4/0	3/0	2*000-350 MCM	4-000

① If power cubes are used, a UL recognized RK fuse is recommended.
② Based on maximum environment of 104°F (40°C).
③ If bypass is used, a UL recognized RK5 fuse is recommended.

Table 3-3: Cable and Fuse Sizes — 380 – 500V Ratings ⑤

hp	Frame Size	NEC I_I (A)	I_I (A)	Fuse (A) ④⑥	Wire Size		Terminal Size	
					Power	Ground	Power	Ground
1-1/2	FR4	3	3.3	10	14	14	16 – 12	16 – 14
2	FR4	3.4	4.3	10	14	14	16 – 12	16 – 14
3	FR4	4.8	5.6	10	14	14	16 – 12	16 – 14
5	FR4	7.6	7.6	10	14	14	16 – 12	16 – 14
7-1/2	FR4	11	12	15	12	14	16 – 12	16 – 14
10	FR5	14	16	20	10	12	16 – 8	16 – 8
15	FR5	21	23	30	10	10	16 – 8	16 – 8
20	FR5	27	31	35	8	8	16 – 8	16 – 8
25	FR6	34	38	50	6	8	14 – 0	10 – 2
30	FR6	40	46	60	4	8	14 – 0	10 – 2
40	FR6	52	61	80	2	6	14 – 0	10 – 2
50	FR7	65	72	100	2	6	14 – 0	10 – 00
60	FR7	77	87	110	1	6	14 – 0	10 – 00
75	FR7	96	105	125	1/0	4	14 – 0	10 – 00
100	FR8	124	140	175	3/0	2	4 – 3/0	4 – 000
125	FR8	156	170	200	4/0	0	000 – 350 MCM	4 – 000
150	FR8	180	205	250	300	2/0	000 – 350 MCM	4 – 000
200	FR9	240	261	350	350	3/0	2*000 – 350 MCM	4 – 000
250	FR9	302	300	400	2 X 250	300	2*000 – 350 MCM	4 – 000

④ If power cubes are used, a UL recognized RK fuse is recommended.
⑤ Based on maximum environment of 104°F (40°C).
⑥ If bypass is used, a UL recognized RK5 fuse is recommended.

Table 3-4: Cable and Fuse Sizes — 525 – 690V Ratings ②

hp	Frame Size	I_I (A)	Fuse (A) ①③	Wire Size		Terminal Size	
				Power	Ground	Power	Ground
3	FR6	4.5	10	14	14	14 – 0	14 – 2
5	FR6	7.5	10	14	14	14 – 0	14 – 2
7-1/2	FR6	10	10	14	14	14 – 0	14 – 2
10	FR6	13.5	15	12	14	14 – 0	14 – 2
15	FR6	18	20	10	12	14 – 0	14 – 2
20	FR6	22	30	10	10	14 – 0	14 – 2
25	FR6	27	35	8	8	14 – 0	14 – 2
30	FR6	34	40	8	8	14 – 0	14 – 2
45	FR7	41	50	6	8	14 – 0	10 – 0
50	FR7	52	60	4	6	14 – 0	10 – 0
60	FR8	62	80	2	6	4 – 3/0	4 – 3/0
75	FR8	80	100	1	6	4 – 3/0	4 – 3/0
100	FR8	100	125	1/0	6	4 – 3/0	4 – 3/0
125	FR9	125	175	3/0	6	4 – 3/0	4 – 3/0
150	FR9	144	200	4/0	2	2x3/0 – 350 MCM	4 – 3/0
200	FR9	208	250	350	1/0	2x3/0 – 350 MCM	4 – 3/0

① If power cubes are used, a UL recognized RK fuse is recommended.
② Based on maximum environment of 104°F (40°C).
③ If bypass is used, a UL recognized RK5 fuse is recommended.

Table 3-5: Maximum Symmetrical Supply Current

Product	Voltage	Maximum RMS Symmetrical Amperes on Supply Circuit
1 – 75 hp	230	100,000A
1-1/2 – 250 hp	480	100,000A
3 – 200 hp	575	100,000A

Table 3-6: Power Connection Tightening Torque

Rating	Frame Size	Tightening Torque (in-lbs)	Tightening Torque (Nm)
230V, 1 – 3 hp 480V, 1-1/2 – 7-1/2 hp	FR4	5	0.6
230V, 5 – 10 hp 480V, 10 – 20 hp	FR5	13	1.5
230V, 15 – 20 hp 480V, 25 – 40 hp 575V, 3 – 30 hp	FR6	35	4
230V, 25 – 40 hp 480V, 50 – 75 hp 575V, 40 – 50 hp	FR7	88	10
230, 50 – 75 hp 480V, 100 hp	FR8	170/80 ④	20/9 ④
480V, 125 – 150 hp 575V, 60 – 100 hp	FR8	354/195 ④	40/22 ④
230V, 100 hp 480V, 200 – 250 hp 575V, 125 – 200 hp	FR9	354/195 ④	40/22 ④

④ The isolation standoff of the bus bar will not withstand the listed tightening torque. Use a wrench to apply a counter torque when tightening.

Installation Instructions

Strip the motor and power cables as shown in **Figure 3-1** and **Table 3-7**.

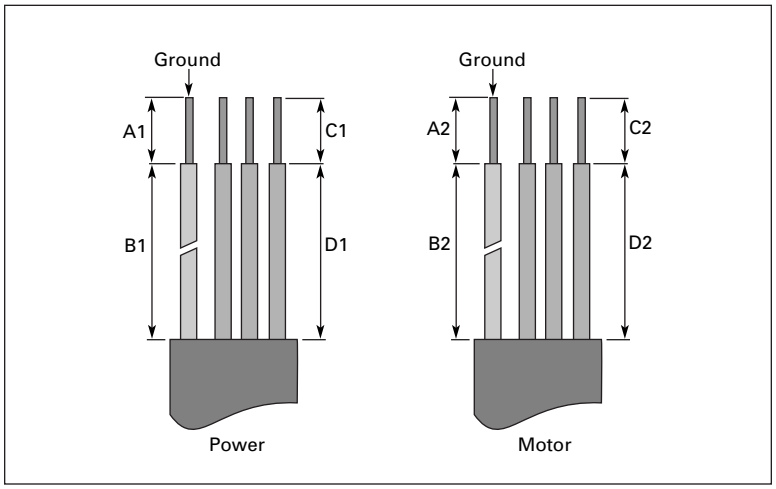

Figure 3-1: Input Power and Motor Cable Stripping and Wire Lengths

Table 3-7: Power and Motor Cable Stripping Lengths

Product		Frame Size	Power Wiring in Inches (mm)				Motor Wiring in Inches (mm)			
Horsepower	**Voltage**		**A1**	**B1**	**C1**	**D1**	**A2**	**B2**	**C2**	**D2**
1 – 3 1-1/2 – 7-1/2	230 480	FR4	0.59 (15)	1.38 (35)	0.39 (10)	0.79 (20)	0.28 (7)	1.97 (50)	0.28 (7)	1.38 (35)
5 – 10 10 – 20	230 480	FR5	0.79 (20)	1.57 (40)	0.39 (10)	1.18 (30)	0.79 (20)	2.36 (60)	0.39 (10)	1.57 (40)
15 and 20 25 – 40 3 – 30	230 480 575	FR6	0.79 (20)	3.54 (90)	0.59 (15)	2.36 (60)	0.79 (20)	3.54 (90)	0.59 (15)	2.36 (60)
25 – 40 50 – 75 40 – 50	230 480 575	FR7	0.98 (25)	4.72 (120)	0.98 (25)	4.72 (120)	0.98 (25)	4.72 (120)	0.98 (25)	4.72 (120)
50 – 75 100 – 150 60 – 100	230 480 575	FR8	1.1 (28)	9.45 (240)	1.1 (28)	9.45 (240)	1.1 (28)	9.45 (240)	1.1 (28)	9.45 (240)
100 200 – 250 125 – 200	230 480 575	FR9	1.1 (28)	11.61 (295)	1.1 (28)	11.61 (295)	1.1 (28)	11.61 (295)	1.1 (28)	11.61 (295)

November 2009

NEMA Type 1/12 Open Drives (1 – 250 HP)

Table 3-8: Control Wiring Instructions — NEMA Type 1/12 Open Drives

Mounting Drive

1. Mount Drive
   (See Table below for dimensions.)

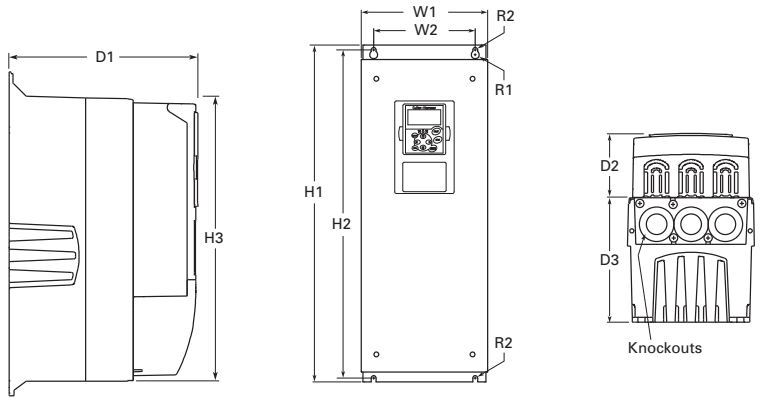

Figure 3-2:

VSD Series Open Drive Dimensions

Frame Size	Voltage	hp (VT)	Approximate Dimensions in Inches (mm)										Weight Lbs. (kg)
			H1	H2	H3	D1	D2	D3	W1	W2	R1 dia.	R2 dia.	
FR4	230V	3/4 – 3	12.9 (327)	12.3 (313)	11.5 (292)	7.5 (190)	2.5 (64)	5.0 (126)	5.0 (128)	3.9 (100)	.5 (13)	.3 (7)	11 (5)
	480V	1 – 5											
FR5	230V	5 – 7-1/2	16.5 (419)	16.0 (406)	15.4 (391)	8.4 (214)	2.7 (68)	5.8 (148)	5.7 (144)	3.9 (100)	.5 (13)	.3 (7)	17.9 (8.1)
	480V	7-1/2 – 15											
FR6	230V	10 – 15	22.0 (558)	21.3 (541)	20.4 (519)	9.3 (237)	2.7 (68)	6.7 (171)	7.7 (195)	5.8 (148)	.7 (18)	.4 (9)	40.8 (18.5)
	480V	20 – 30											
	575V	2 – 25											
FR7	230V	20 – 30	24.8 (630)	24.2 (614)	23.3 (591)	10.1 (257)	2.7 (68)	7.5 (189)	9.3 (237)	7.5 (190)	.7 (18)	.4 (9)	77.2 (35)
	480V	40 – 60											
	575V	30 – 40											
FR8	480V	75 – 125	29.7 (755)	28.8 (732)	28.4 (721)	11.3 (288)	1.3 (34)	11.0 (279)	11.2 (285)	10.0 (255)	.7 (18)	.4 (9)	127.8 (58)
	575V	50 – 75											
FR9	480V	150 – 200	45.3 (1150)	44.1 (1120)	—	14.3 (362)	5.4 (137)	8.8 (224)	18.9 (480)	15.7 (400)	.7 (18)	.4 (9)	321.9 (146)
	575V	100 – 150											
FR10	480V	250 – 350	44 (1120)	33.5 (850)	—	23.6 (600)	NA	NA	23.6 (600)	16.7 (425)	.9 (23)	.47 (12)	550.7 (250)
	575V	200 – 300											

Power Wiring

Notice

Do not discard the plastic bag containing the wiring plate.

2. Remove the bottom cover by rotating the cover toward you on the base hinges, then lifting the cover away from the base.

Power Wiring

3. Locate the plastic bag shipped with the drive containing the wiring plate, and remove the wiring plate.

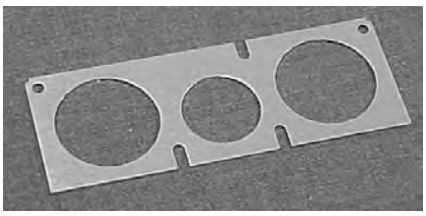

Standard Wiring Diagrams and Terminal Locations

Power and Motor Wiring Terminal Schematics for VSD Series Drives

The following wiring diagrams show the line and motor connections of the drive.

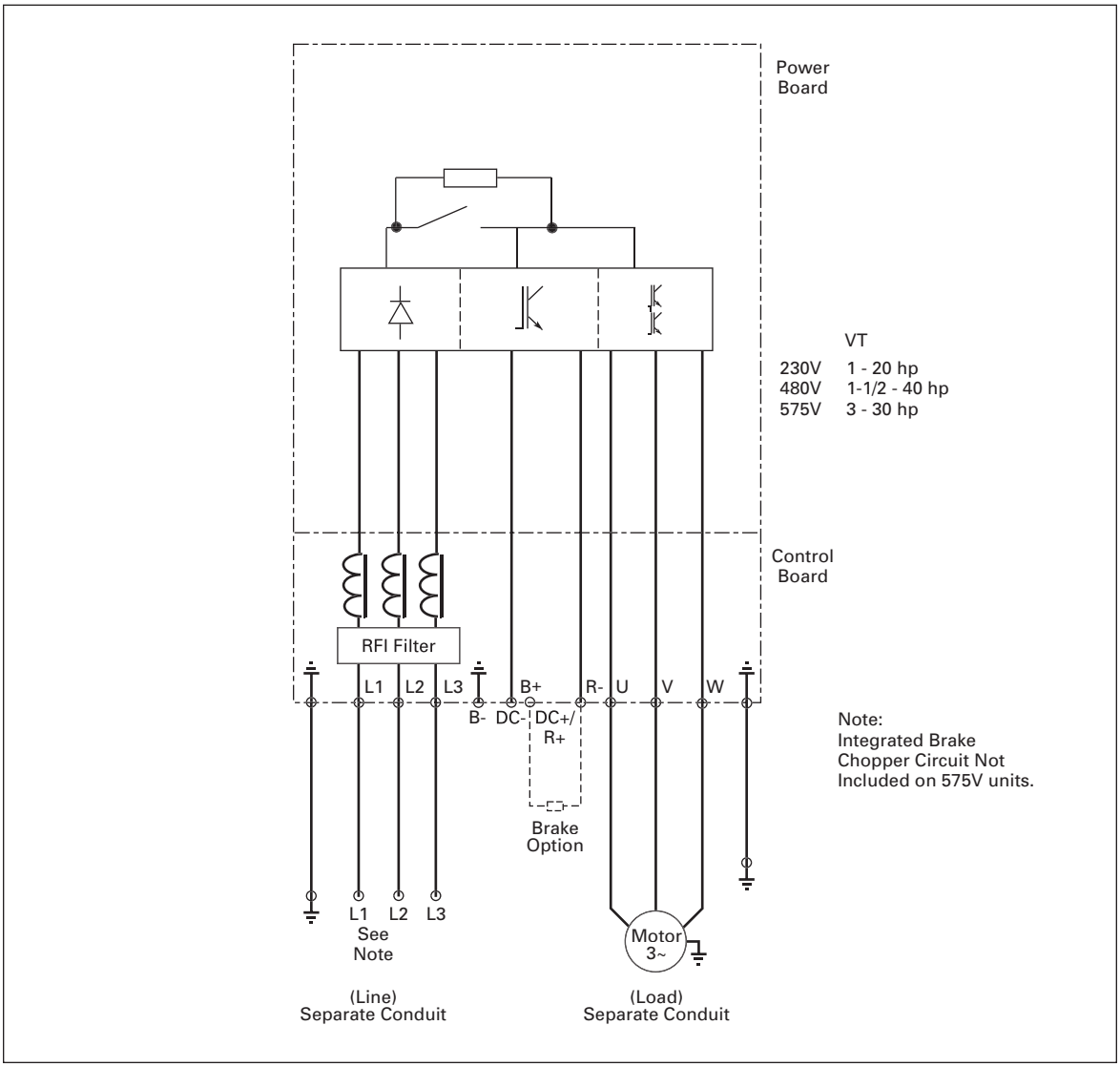

Figure 3-3: Principle Wiring Diagram of VSD Series Power Unit, FR4, FR5 and FR6

Note: When using a 1-phase supply, for units rated for such, connect the input power to terminals L1 and L2. Refer to **Tables A-2** and **A-3** in **Appendix A**.

Table 3-8: Control Wiring Instructions — NEMA Type 1/12 Open Drives (Continued)

Power Wiring

4. If conduit is being used, attach the wiring plate to it.
5. Pass the motor and input power wires/cables through the holes of the wiring plate.
6. If shielded cable is used, connect the shields of the input line power cable and the motor cable to the motor and power ground terminals of the VSD Series drive.

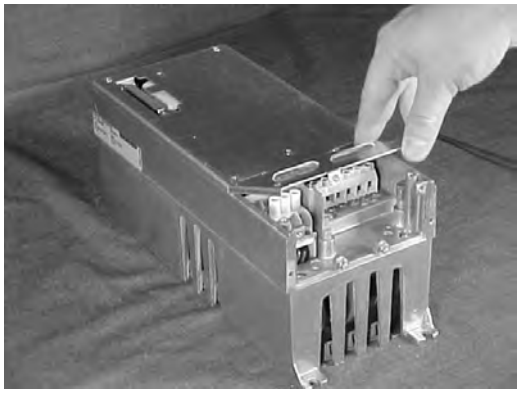

Power Wiring/Grounding

7. Wire power terminals, motor terminals, and grounding terminals per diagram. Power and Motor leads must be in separate conduit.

Note: Do not wire motor loads to B- B+ R-. This will cause damage.

GROUND WIRING

- Run motor cables in separate conduit.
- DO NOT RUN CONTROL WIRES in same conduit
- Cables sized per NEC.
- Provide low impedance ground between drive and motor.

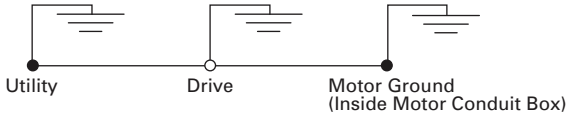

IMPORTANT: Improper grounding could result in damage to the motor and/or drive and could void warranty

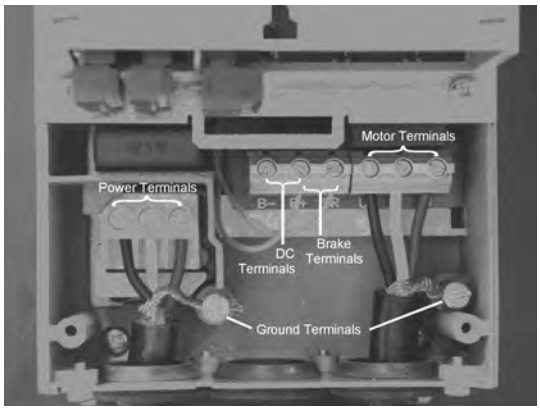

Control Wiring

8. Wire the control terminals following the details for the specific option boards shown on the following pages.

Note: For ease of access, the option board terminal blocks can be unplugged for wiring.

Note: If using conduit or Seal Tite for control wiring for Frame 4, you must order NEMA Type 12 kit.

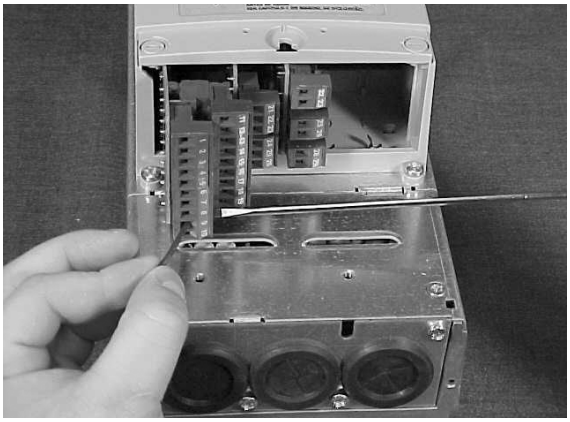

Table 3-8: Control Wiring Instructions — NEMA Type 1/12 Open Drives (Continued)

Control Wiring

9. Wire control to the OPTA9 Control Board and OPTA2.

Note: Drive default is programmed for Damper Interlock.

Note: Option Boards OPTC2 (N2/XT/SA Bus) and OPTC4 (LonWorks) are optional.

Mandatory Ground Wiring

Be sure to pull low impendance ground wiring from customer power to drive and ground wire from drive to motor.

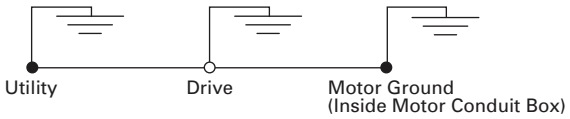

I/O Connection

- Run 110 Vac and 24 Vdc Control wiring in separate conduit.
- Communication wire to be shielded.
- RS-232 Keypad cable less than 20 feet.

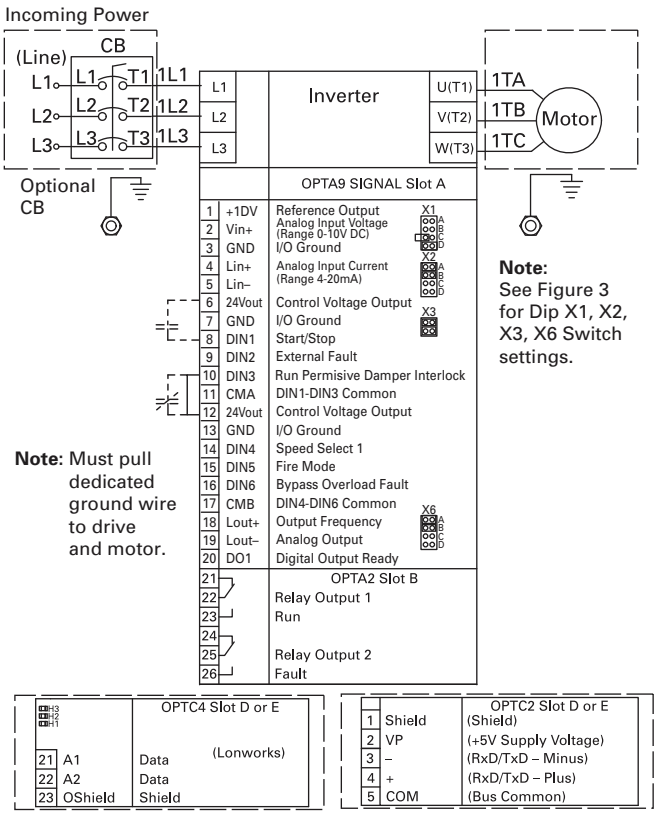

Figure 3-4:

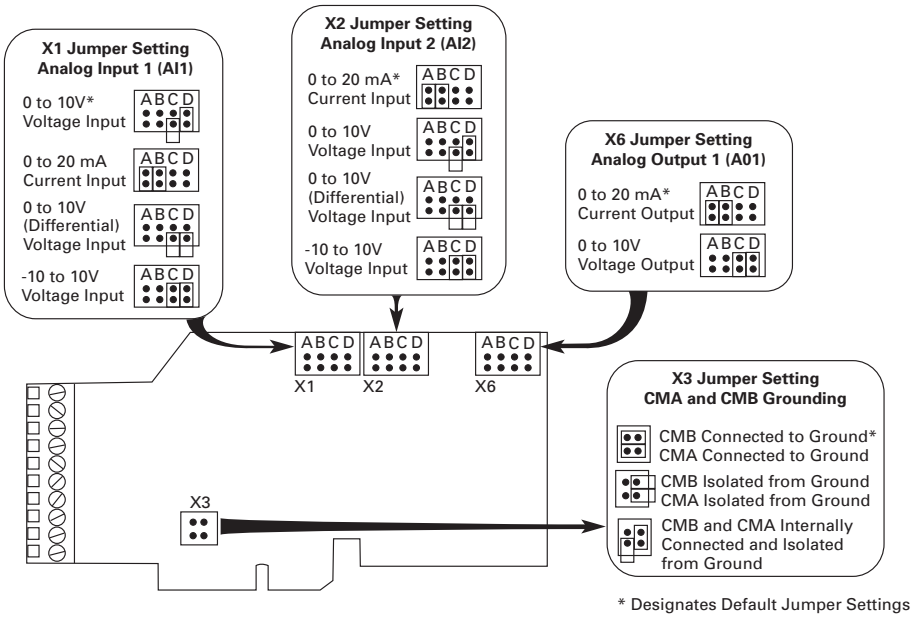

* Designates Default Jumper Settings

Figure 3-5: Option Board A9 Location and Settings

Start-Up Wizard	See **Page 7-4**, Start-Up Wizard

Checking the Cable and Motor Insulation

1. Check the motor cable insulation as follows:
   - Disconnect the motor cable from terminals U, V and W of the VSD Series drive and from the motor.
   - Measure the insulation resistance of the motor cable between each phase conductor as well as between each phase conductor and the protective ground conductor.
   - The insulation resistance must be >1MΩ.
2. Check the input power cable insulation as follows:
   - Disconnect the input power cable from terminals L1, L2 and L3 of the VSD Series drive and from the utility line feeder.
   - Measure the insulation resistance of the input power cable between each phase conductor as well as between each phase conductor and the protective ground conductor.
   - The insulation resistance must be >1MΩ.
3. Check the motor insulation as follows:
   - Disconnect the motor cable from the motor and open any bridging connections in the motor connection box.
   - Measure the insulation resistance of each motor winding. The measurement voltage must equal at least the motor nominal voltage but not exceed 1000V.
   - The insulation resistance must be >1MΩ.

Chapter 4 — Control Wiring

General Information

The control unit of the VSD Series drive consists of the control board and various option boards that plug into the five slot connectors (A to E) of the control board.

Galvanic isolation of the control terminals is provided as follows:

- Control connections are isolated from power, and the GND terminals are permanently connected to ground.
- Digital inputs are galvanically isolated from the I/O ground.
- Relay outputs are double-isolated from each other at 300V AC.

Option Board General Information

The VSD Series drives can accommodate a wide selection of *expander* and *adapter boards* to customize the drive for your application needs.

The drive's control unit is designed to accept a total of five option boards. Option boards are available for normal analog and digital inputs and outputs, for communication and for additional application-specific hardware.

The VSD Series factory installed standard option board configuration includes an A9 I/O board and an A2 relay output board, which are installed in slots A and B. For information on additional option boards, see the VSD Series drives option board manuals.

Note: If your VSD Series drive has been shipped with a factory installed IntelliPass bypass, the B5 option board is installed in slot C.

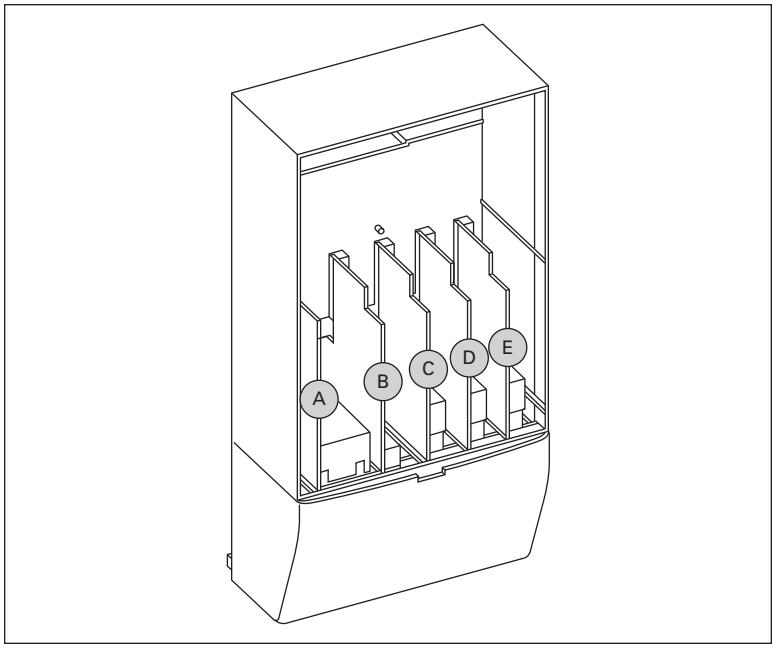

Figure 4-1: Option Board Slots

Table 4-1: Option Board A2 Terminal Descriptions

Terminal		Signal	Description and Parameter Reference	
21	RO-1/1	Normally Closed (NC)	Run	Switching Capacity: 24V DC / 8A 250V AC / 8A 125V DC / 0.4Az Min switching load: 5V/10 mA Continuous Capacity: <2 Arms
22	RO-1/2	Common		
23	RO-1/3	Normally Open (NO)		
24	RO-2/1	Normally Closed (NC)	Fault	Switching Capacity: 24V DC / 8A 250V AC / 8A 125V DC / 0.4A Min switching load: 5V/10 mA Continuous Capacity: <2 Arms
25	RO-2/2	Common		
26	RO-2/3	Normally Open (NO)		

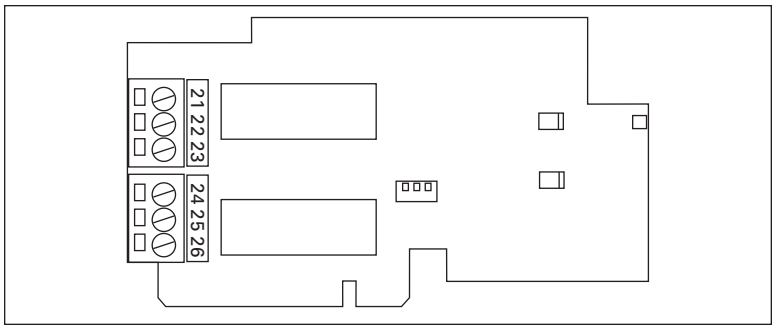

Figure 4-2: Option Board A2 Terminal Locations

Inverting the Digital Input Signal

The active signal level depends on which potential the common inputs CMA and CMB (terminals 11 and 17) are connected to. The alternatives are either 24V DC or ground (0V). See **Figure 4-3**.

The 24V DC control voltage and the ground for the digital inputs and the common inputs (CMA, CMB) can be either the internal 24V DC supply or an external supply.

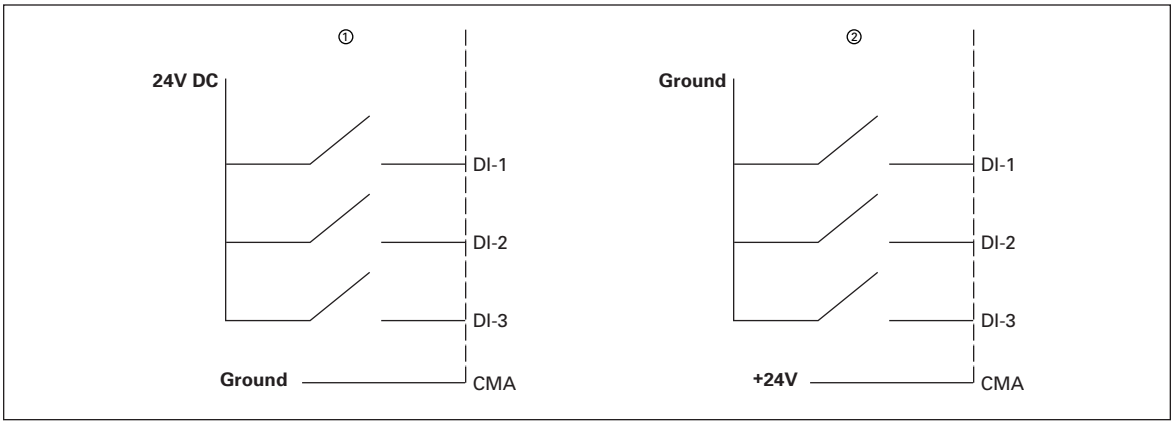

Figure 4-3: Positive/Negative Logic

① Positive logic (24V DC is the active signal) = the input is active when the switch is closed.
② Negative logic (0V is the active signal) = the input is active when the switch is closed.

November 2009

Chapter 5 — IntelliPass Bypass Option

Product Description

The Johnson Controls VSD Series IntelliPass Drive is powered by the Cutler-Hammer® tradition of providing a premier intelligent drive integrated with a reliable bypass configuration, by taking advantage of the enclosed control and circuit breaker expertise of Eaton's electrical business.

The IntelliPass bypass is a two- or three-contactor design utilizing the Cutler-Hammer 24V DC series of contactors and power supplies. The features, function and form allow the drive and bypass to become an integrated design, enabling Johnson Controls to introduce the world's smallest drive and bypass package. The IntelliPass drive comes standard with a Cutler-Hammer protective disconnect integrated into the drive and bypass design.

IntelliPass 2 & 3 Contactor Bypass Drive

208V, 1 – 30 hp
230V, 1 – 30 hp
480V, 1 – 75 hp

IntelliPass TYPE 12, 2 & 3 Contactor Bypass Drive

208V, 1-1/2 – 60 hp
230V, 1 – 75 hp
480V, 1 – 150 hp
575V, 3 – 100 hp

IntelliPass TYPE 3R, 2 & 3 Contactor Bypass Drive

208V, 1-1/2 – 60 hp
230V, 1 – 75 hp
480V, 1 – 150 hp
575V, 3 – 100 hp

DX-9100 TYPE 1, 2 & 3 Contactor Bypass Drive

208V, 1-1/2 – 60 hp
230V, 1 – 75 hp
480V, 1 – 150 hp
575V, 3 – 100 hp

Catalog Number Selection

Table 5-1: VSD Series IntelliPass/IntelliDisconnect Drives Selection Chart

	Code Number	V	S					1	1	A	-	N				
Base Product	VS = Variable Speed Drive Prefix															
Horsepower (VT) ①	001 = 1.0 hp to 075 = 75 hp ②															
Voltage	1 = 208V 2 = 230V 4 = 480V															
Enclosure Rating	1 = TYPE 1															
Enclosure Style	1 = IntelliPass 4 = IntelliDisconnect															
Revision #	A = Rev 1 (Americas)															
Separator (–)																
Communications ③	0 = None N = N2/XT/SA ④ Bus Comm (N2 by default) L = LONWORKS® Network															
Option 1	See Options List ⑤															
Option 2	See Options List ⑤															

① All horsepower ratings are Variable Torque (VT).
② 1 – 30 hp 208/230V AC; 1 – 75 hp 480V AC
③ N2/XT Communications selectable on drive keypad.
④ SA = Sensor Actuator Bus for FEC Interface.
⑤ Options List: 00 = None
P6 = 3rd Contactor Drive Isolation (IntelliPass only)
Note: All VSD Series IntelliPass Drives incorporate two factory installed Auxiliary Contacts (formerly the “K9” option).

Table 5-2: VSD Series Enclosed Drives Selection Chart

	Code Number	V	S								-					
Base Product	VS = Variable Speed Drive Prefix															
Horsepower (VT) ①	001 = 1.0 hp to 150 = 150 hp ②															
Voltage	1 = 208V 2 = 230V 4 = 480V 5 = 575V															
Enclosure Rating	1 = TYPE 1 2 = TYPE 12 3 = TYPE 3R															
Enclosure Style	2 = Enclosed IntelliPass 3 = Enclosed Drive w/Disconnect (IntelliDisconnect)															
Revision Number	A = Rev 1 (Americas)															
Separator (–)																
Communications ③	0 = None N = N2/XT/SA ④ Bus Comm (N2 by default) L = LONWORKS® Network															
Option 1	See Options List															
Option 2	See Options List															

① All horsepower ratings are Variable Torque (VT).
② 1 to 60 hp @ 208V; 1 to 75 hp @ 230V; 1 to 150 hp @ 480V; 3 to 100 hp @ 575V
③ N2/XT/SA Communications selectable on drive keypad.
④ SA = Sensor Actuator Bus for FEC Interface.

Table 5-3: Options List

Option	Description
00	**None**
P3	**Line Fuses (formerly Drive Isolation Fusing)** — Provides high-level fault protection of the input power circuit from the load side of the fuses to the input side of the power transistors. The option consists of three 200 kA fuses, which are factory mounted in the enclosure.
P6 ⑤	**Third Contactor Drive Isolation** — Provides load side isolation to the drive in the event of an SCR or DC Bus failure, allowing the drive to go into bypass without tripping the circuit breaker. Typically used in critical applications or when required in a specification.
P9 ⑤	**Line Fuses & Third Contactor**
SA	**Space Heater w/Transformer** — Prevents condensation from forming in the enclosure when the drive is inactive or in storage. Includes a thermostat for variable temperature control.

⑤ IntelliPass only.

Table 5-4: Option Notes

All VSD Series IntelliPass Drives incorporate two factory-installed Auxiliary Contacts (formerly the **K9** option).		
P3	Line Fuses	Line Fuses, on load side of breaker in both drive and bypass modes
		Always included in the part number for 575V Enclosed IntelliPass Drives
P9	Line Fuses & Third Contactor	Mutually exclusive from Option **P3** (Line Fuses) in 575V Enclosed IntelliPass Drives
SA	Space Heater w/Transformer	Only available for TYPE 3R (Enclosure Rating **3**).

NEMA Type 1 IntelliPass/IntelliDisconnect Drive

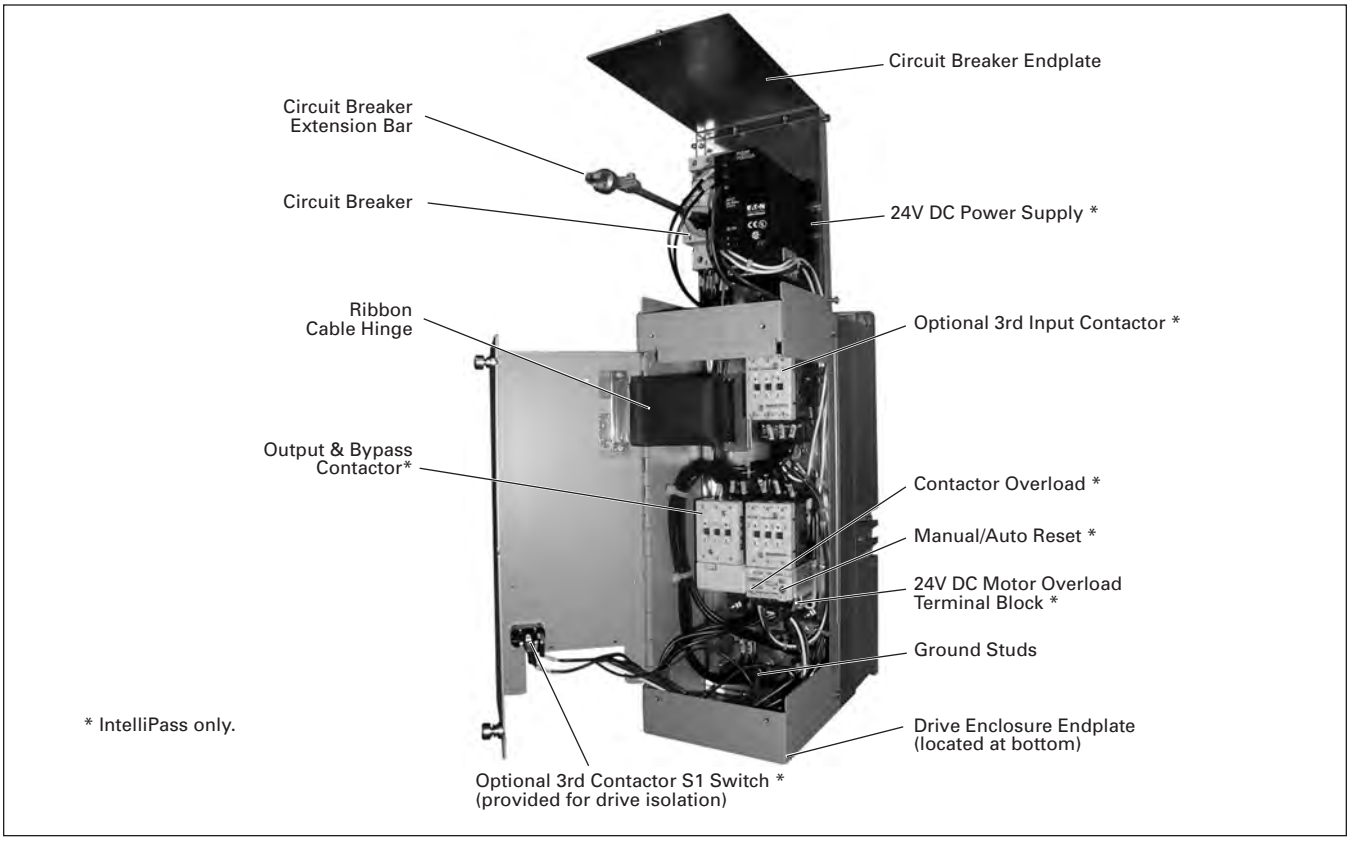

Figure 5-1: Identification of NEMA Type 1 Components

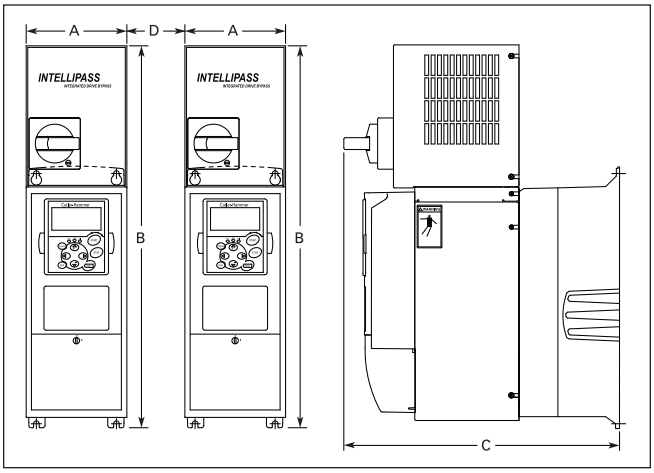

Figure 5-2: VSD Series IntelliPass/IntelliDisconnect Drive Dimensions

Table 5-5: VSD Series NEMA Type 1 IntelliPass/IntelliDisconnect Drive Dimensions

Drive Horsepower (VT)	Frame Size	Approximate Dimensions in Inches (mm)			Approx. Weight in lbs. (kg)	Distance Between Drives in Inches (mm) ①
		A	B	C		D
208V, 1 – 3 hp 230V, 1 – 3 hp 480V, 1 – 7-1/2 hp	FR4	5.04 (128)	18.25 (464)	13.24 (336)	21 (9.5)	5.3 (134.6)
208V, 5 – 7-1/2 hp 230V, 5 – 10 hp 480V, 10 – 20 hp	FR5	5.50 (140)	23.25 (591)	13.24 (336)	35 (15.9)	5.7 (144.8)
208V, 10 – 20 hp 230V, 15 and 20 hp 480V, 25 – 40 hp	FR6	7.50 (191)	29.38 (746)	15.25 (387)	67 (30.4)	7.5 (190.5)
208V, 25 and 30 hp 230V, 25 and 30 hp 480V, 50 – 75 hp	FR7	9.10 (231)	37.53 (953)	15.25 (387)	108 (49.0)	9.0 (228.6)

① If mounting two or more IntelliPass Drives next to each other, make sure to use the proper spacing between the drives for hinged door operation.

Table 5-6: Bypass Power Wiring Instructions — NEMA Type 1 IntelliPass/IntelliDisconnect Drive

Mounting Drive 1. Mount drive per dimensions. (See **Page 5-4**) 2. Verify that the main power source is removed upstream. 3. Using a flat-blade screwdriver, remove the four screws securing the outer cover of the drive and remove the cover. 4. Using the same screwdriver, remove the two center screws securing the side cover. 5. Make sure there is adequate room, and open the hinged side cover.	
Power Wiring 6. Using a flat-blade screwdriver, remove the screws securing the endplate at the bottom of the drive enclosure, and remove the endplate. 7. Using a Greenlee conduit cutter (recommended), cut one or more holes in the endplate, located at the bottom of the drive's enclosure, for the motor and power leads. **Note**: If bringing the power leads in through the top of the drive's enclosure, go to step 8. If not, proceed to step 10.	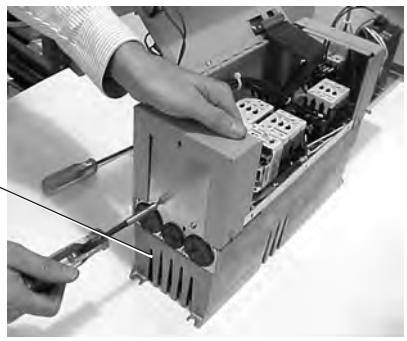
Power Wiring 8. Using a flat-blade screwdriver, remove the screws securing the endplate for the circuit breaker enclosure, and remove the endplate. 9. Using a Greenlee conduit cutter (recommended), cut one hole in the circuit breaker endplate for the power leads.	
Power Wiring 10. Calibrate the circuit breaker amperage, so it is 1.25 times the amperage on the motor nameplate, by turning the red set screw located below the circuit breaker extension bar. See the circuit breaker user's manual supplied with the drive. 11. Connect the incoming power leads to circuit breaker terminals labeled L1, L2 and L3. Cables sized per NEC. 12. Using the torque wrench, tighten each terminal to the torque value found in the appropriate user's manual supplied with the drive. **POWER WIRING** ● Run cabling in separate metal conduit or wiring tray. ● DO NOT RUN CONTROL WIRING with incoming power wiring. ● Provide low impedance ground connection to drive chassis. ● DO NOT CONNECT to B+, B-, R terminals.	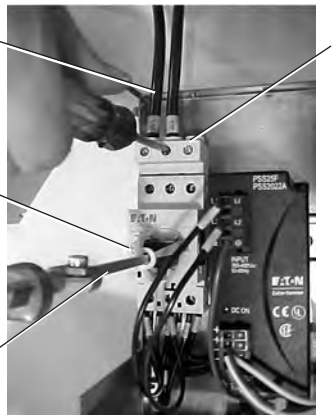

Table 5-6: Bypass Power Wiring Instructions — NEMA Type 1 IntelliPass/IntelliDisconnect Drive (Continued)

Motor Wiring

13. Use your first and second fingers and simultaneously push down to release the two orange retaining clips (one on each side of the 24V DC motor overload terminal block).
14. If necessary, use a flat-blade screwdriver to carefully remove the terminal block in a straight plane to avoid damaging it.

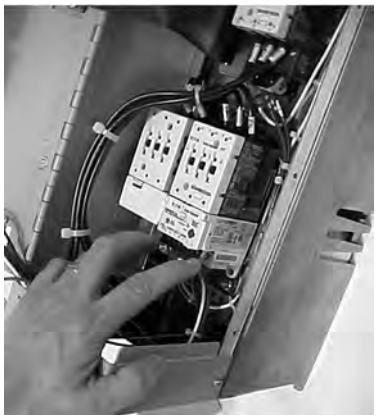

Motor Wiring

15. Connect the motor leads to the motor overload terminals labeled 1TA, 1TB and 1TC.
16. Using the appropriate **metric** Allen wrench (2.5 mm, 3 mm or 4 mm), tighten each overload terminal per the specifications in the contactor user's manual.

MOTOR WIRING

An SAE allen wrench will damage the terminals, and the motor overload will need to be replaced (not covered by warranty).

17. Using the torque wrench, tighten each terminal to the torque value found in the appropriate user's manual supplied with the drive.
18. Reinsert the motor overload terminal block.

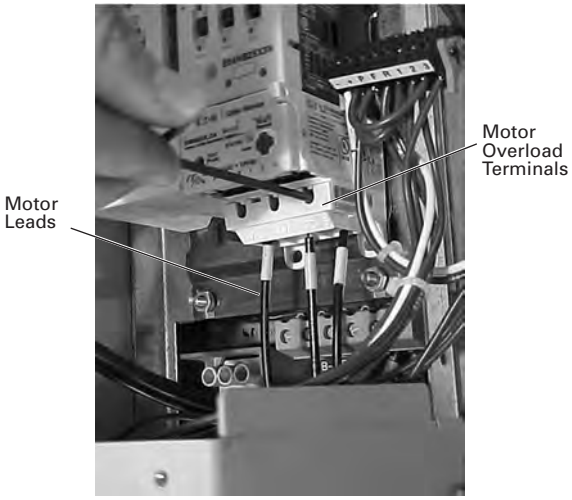

Grounding

19. Use a flat-blade screwdriver to connect the motor ground wire to the ground stud (located at either the top or bottom of the drive's enclosure). (Mandatory) Ground connection main power ground must be connected to other ground screws.

GROUND WIRING

- Run motor cables in separate conduit.
- DO NOT RUN CONTROL WIRES in same conduit
- Cables sized per NEC.
- Provide low impedance ground between drive and motor.

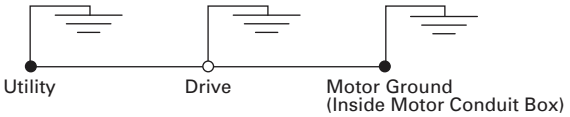

IMPORTANT: Improper grounding could result in damage to the motor and/or drive and could void warranty

Table 5-6: Bypass Power Wiring Instructions — NEMA Type 1 IntelliPass/IntelliDisconnect Drive (Continued)

Setting Overload

20. Lift to open the cover on the motor overload, and use a 1/8" flat-blade screwdriver to set the overload amperage to match the value on the motor nameplate.
21. Turn the auto/manual reset (factory default is manual) on the motor overload 90° to the auto position.

Control Wiring

22. Use a flat-blade screwdriver to carefully remove the low-voltage I/O terminal block.
23. Insert the incoming control leads into the terminal block. Refer to the electrical schematic supplied with the drive.
24. Reinsert the I/O terminal block into the control board.
25. Verify that all other wires to the terminal block are connected.
26. Terminate control wiring to the OPTA9 and OPTA2 board (Terminals 1 – 26).

CONTROL WIRING

- Run 110 Vac and 24 Vdc control wiring in separate conduit.
- Communication wire must be shielded.
- RS-232 keypad cable must be less then 25 feet.

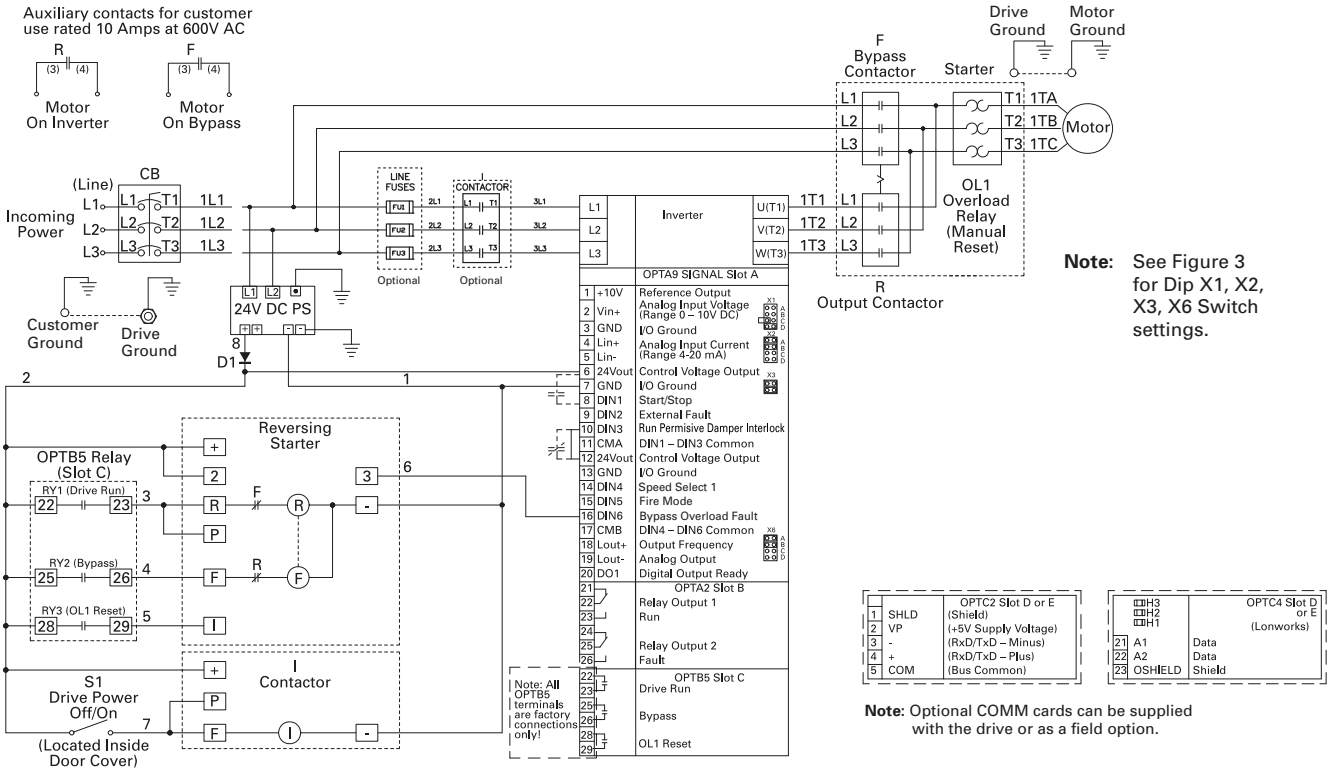

Figure 5-3: VSD Series IntelliPass with Three Contactors

Table 5-6: Bypass Power Wiring Instructions — NEMA Type 1 IntelliPass/IntelliDisconnect Drive (Continued)

Static Check 27. Make sure power is off, and perform static checks as described in **Table 5-10** (for the converter), **Table 5-11** (for the inverter) and **Table 5-12** (for the DC bus). Refer to **Page 5-14**, Static Check. **Note:** Static check shown is for L3 and B+ terminals. 28. Once the pre-power static checks are completed, reinstall the drive's outer and side covers, tightening all the screws. **WARNING** High Voltage is present on L1, L2, L3, B-, B+, BT, T1, T2, T3.	
Starting Drive 29. Make sure that the drive's 3rd contactor S1 switch, if present, is in the ON position (shown in OFF position). **Note:** The bypass mode operates with the switch in the OFF position, however the drive will not run. Yet the keypad will operate.	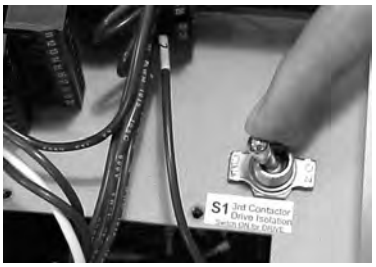
Starting Drive 30. Turn the circuit breaker handle in a clockwise direction. **WARNING** High Voltage ● Always work with another person. ● Be sure equipment is properly grounded. ● Wear safety glasses.	
Start-Up Wizard	See **Page 7-4**, Start-Up Wizard

Enclosed NEMA Type 12/3R

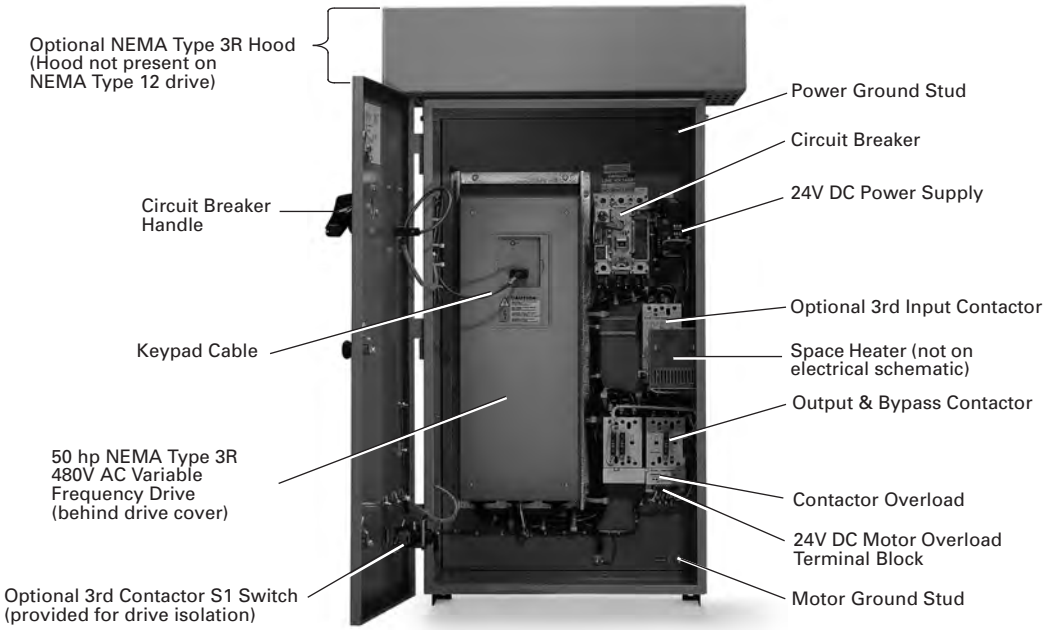

Figure 5-4: Identification of NEMA Type 12 and NEMA Type 3R Components

Note: You will need to consult the electrical schematic supplied with the drive and the appropriate wiring diagram in Appendix D.

Table 5-7: VSD Series NEMA Type 12 Enclosed IntelliPass Drive Dimensions

Drive Horsepower (VT)	Frame Size	Enclosure Box	Approximate Dimensions in Inches (mm)		
			A	B	C
208V, 1 – 15 hp 230V, 1 – 15 hp 480V, 1 – 30 hp 575V, 3 – 30 hp	FR4 – FR6 FR4 – FR6 FR4 – FR6 FR6	A	16.92 (429.8)	29.00 (736.6)	18.60 (472.4)
208V, 20 – 30 hp 230V, 20 – 30 hp 480V, 40 – 75 hp 575V, 40 – 50 hp	FR6 – FR7	B	20.92 (531.3)	40.00 (1016.0)	19.10 (485.1)
208V, 40 – 60 hp 230V, 40 – 60 hp 480V, 100 – 150 hp	FR8	C	30.92 (785.3)	52.00 (1320.8)	19.10 (485.1)

① Floor Stands available on Box C only and can be purchased and shipped separately as kit.

Table 5-8: VSD Series NEMA Type 3R Enclosed IntelliPass Drive Dimensions

Drive Horsepower (VT)	Frame Size	Enclosure Box	Approximate Dimensions in Inches (mm)		
			A	B	C
208V, 1 – 15 hp 230V, 1 – 15 hp 480V, 1 – 30 hp 575V, 3 – 30 hp	FR4 – FR6	A	21.05 (534.7)	33.00 (838.2)	19.57 (497.0)
208V, 20 – 30 hp 230V, 20 – 30 hp 480V, 40 – 75 hp 575V, 40 – 50 hp	FR6 – FR7	B	26.31 (668.3)	46.09 (1170.7)	20.07 (509.9)
208V, 40 – 60 hp 230V, 40 – 60 hp 480V, 100 – 150 hp	FR8	C	37.73 (958.3)	58.09 (1475.5)	20.08 (510.0)

② Floor Stands available on Box C only and can be purchased and shipped separately as kit.

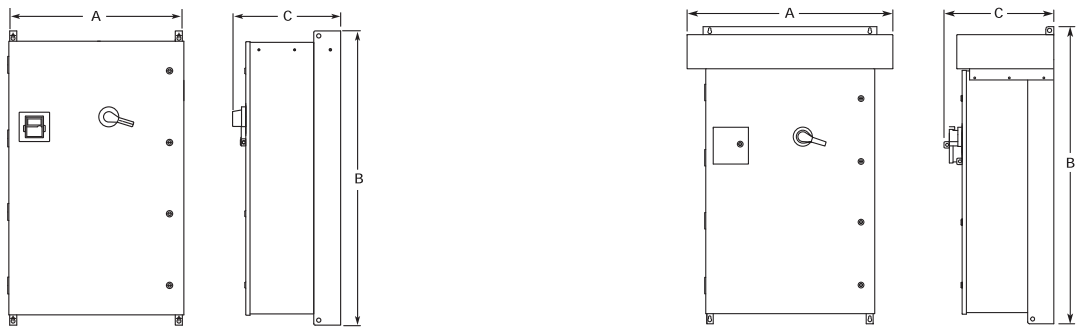

Figure 5-5: VSD Series Enclosed Drive Dimensions

Table 5-9: Bypass Power Wiring Instructions — Enclosed NEMA Type 12/3R

Mounting Drive

1. Mount drive per dimensions. (See **Page 5-9**.)
2. Verify that the main power source is removed upstream.
3. Remove the keypad cable from the drive.
4. Remove the screws from the drive cover, and remove the cover.

CAUTION

The circuit breaker extension bar is sharp and can cause injury.

5. Calibrate the circuit breaker amperage, so it is 1.25 times the value on the motor nameplate, by turning the red set screw located below the circuit breaker extension bar. See the circuit breaker user's manual supplied with the drive.

Power and Ground Wiring

6. Using a Greenlee conduit cutter (recommended), cut three holes in the drive's enclosure for the incoming power, motor and low-voltage control leads.

POWER WIRING

Note: Power, motor and control leads must each be located in separate conduit.

- **DO NOT RUN CONTROL WIRING in same conduit with power wiring.**
- **Provide low impedance ground connection to drive chassis.**
- DO NOT CONNECT B+, B-, R terminal. (Reserved for Braking Resistor only.)

7. Connect the incoming power leads to circuit breaker terminals labeled L1, L2 and L3.
8. Using the torque wrench, tighten each terminal to the torque value found in the appropriate user's manual supplied with the drive.
9. Connect the power ground wire to the ground stud. Connect motor ground to ground stud.

Setting Space Heater

10. If applicable, set the space heater. See the space heater user's manual supplied with the drive.

Note: The space heater is used to prevent condensation from damaging the equipment when the drive is not operating (OFF).

Table 5-9: Bypass Power Wiring Instructions — Enclosed NEMA Type 12/3R (Continued)

Motor Wiring 11. Use your first and second fingers and simultaneously push down to release the two orange retaining clips (one on each side of the 24V DC motor overload terminal block). 12. If necessary, use a flat-blade screwdriver to carefully remove the terminal block in a straight plane to avoid damaging it.	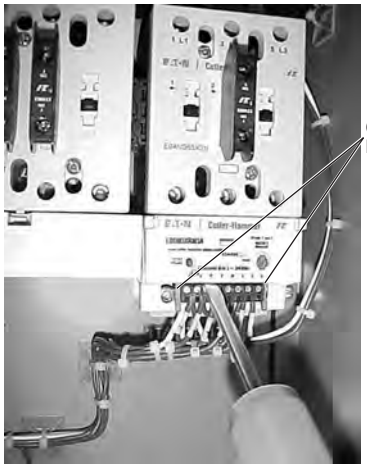
Setting Motor Overload 13. Lift to open the cover on the motor overload, and use a 1/8" flat-blade screwdriver to set the overload amperage to match the value on the motor nameplate. 14. Turn the auto/manual reset (factory default is manual) on the motor overload 90° to the auto position.	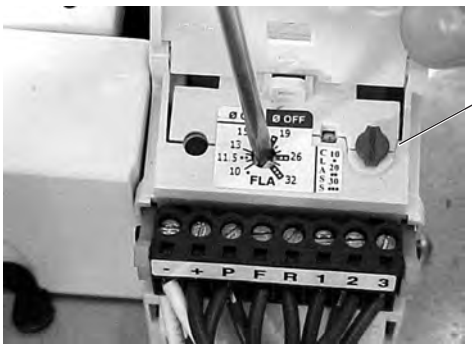
Motor Wiring 15. Connect the motor leads to the motor overload terminals labeled 1TA, 1TB and 1TC. 16. Using the appropriate **metric** Allen wrench (2.5 mm, 3 mm or 4 mm), tighten each overload terminal per the specifications in the contactor user's manual. **MOTOR WIRING** **An SAE allen wrench will damage the terminals, and the motor overload will need to be replaced (not covered by warranty).** 17. Using the torque wrench, tighten each terminal to the torque value found in the appropriate user's manual supplied with the drive. 18. Reinsert the motor overload terminal block. 19. Connect the motor ground wire to the ground stud. **Note:** ● Run motor cables in separate conduit. ● Do not run control wires in same conduit. ● Size motor leads per NEC. ● Provide low impedance ground.	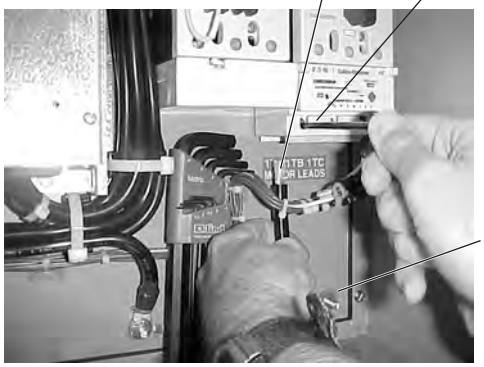

Table 5-9: Bypass Power Wiring Instructions — Enclosed NEMA Type 12/3R (Continued)

Control Wiring

20. Use a flat-blade screwdriver to carefully remove the low-voltage I/O terminal block.
21. Reinsert the I/O terminal block into the control board.
22. Terminate control wiring to the OPTA9 and OPTA2 board (Terminals 1 – 26).

Note: Use 1/8" flat-blade.

⚠ CAUTION

- Run 110 Vac and 24 Vdc control wiring in separate conduit.
- Communication wire to be shielded.
- RS-232 keypad cable must be less then 25 feet (to prevent nuisance trips).

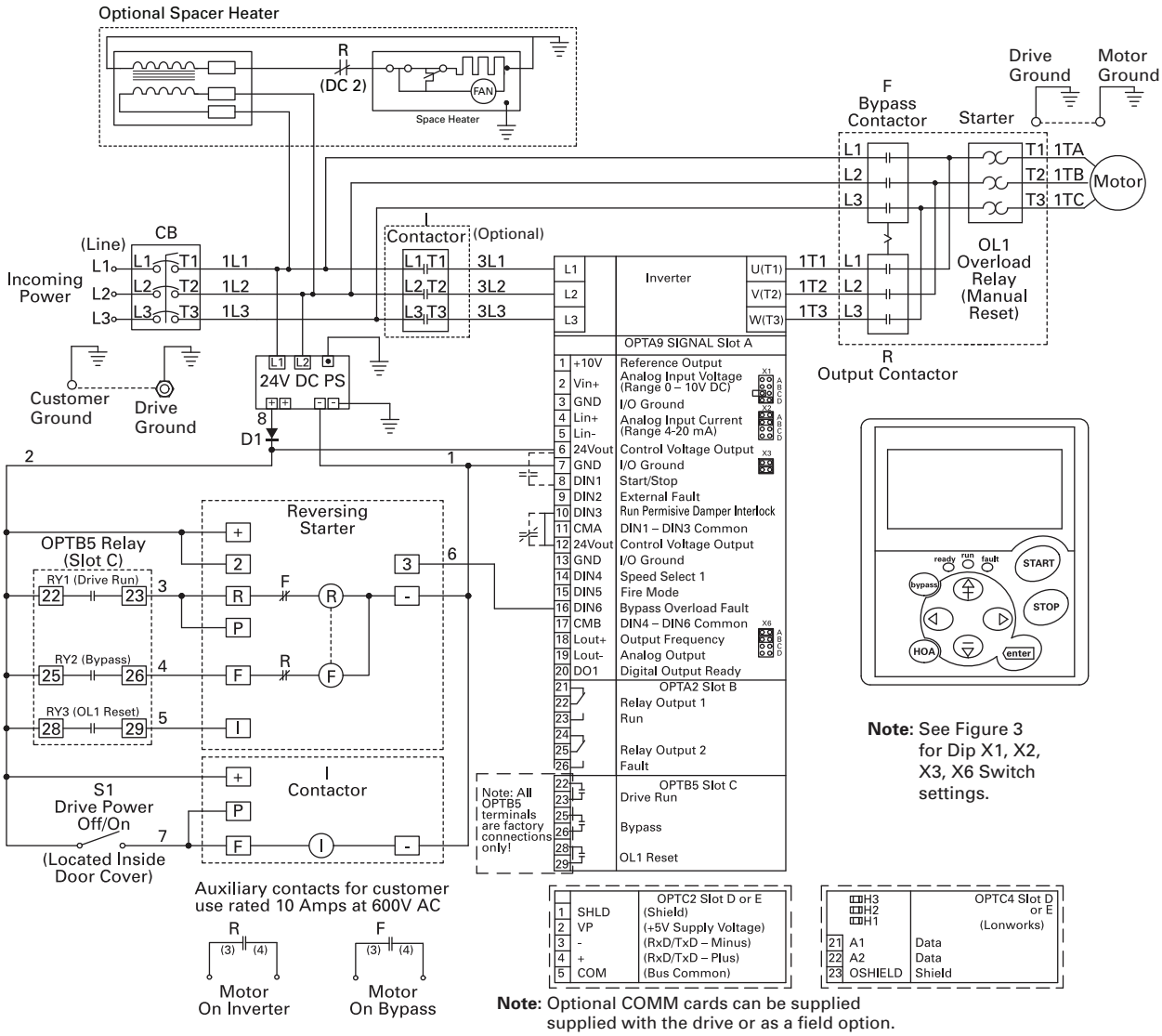

Figure 5-6:

Table 5-9: Bypass Power Wiring Instructions — Enclosed NEMA Type 12/3R (Continued)

Static Check 23. Use a Phillips screwdriver to remove all the faceplate screws on the high-voltage faceplate, and remove the faceplate. **Note:** Location of the screws may vary from the drive illustrated. There may be screws securing a bottom faceplate, which also need to be removed.	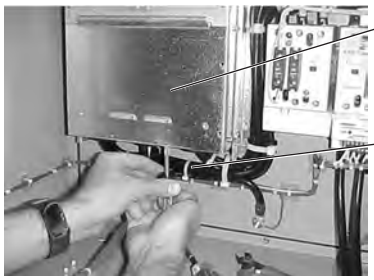
Static Check 24. Make sure power is off, and perform static checks as described in **Table 5-10** (for the converter), **Table 5-11** (for the inverter) and **Table 5-12** (for the DC bus). Refer to **Page 5-14**. **Note:** Static check shown is for L3 and B+ terminals. 25. Once the pre-power static checks are completed, reinstall the drive's outer and side covers, tightening all the screws. **WARNING** High Voltage is present on L1, L2, L3, B-, B+, BT, T1, T2, T3.	
Starting Drive 26. Make sure that the drive's 3rd contactor S1 switch, if present, is in the ON position (shown in OFF position). **Note:** The bypass mode operates with the switch in the OFF position, however the drive will not run. Yet the keypad will operate. 27. Reinsert the keypad cable and control board on small drives.	
Starting Drive 28. Close the drive door, and turn the circuit breaker handle in a clockwise direction. 29. Go to Appendix E for keypad operation. **Note:** If the circuit breaker latch is locked, use a flat-blade screwdriver to turn the screw to release the handle. **WARNING** High Voltage ● Always work with another person. ● Be sure equipment is properly grounded. ● Wear safety glasses.	
Start-Up Wizard	See **Page 7-4**, Start-Up Wizard

Static Checking

Static checking tests the integrity of the power-carrying components (diodes, capacitors and IGBTs) within the drive assembly. Performing these static checks ensures that no damage occurred during shipping or installation that could cause a failure when the drive is powered.

Make sure there is no power to the drive before proceeding with any of the static checks.

After checking each set of terminals, zero out the multimeter by touching the metal tips of the red (positive) and black (negative) leads to each other.

Note: Set the multimeter to the diode function, and check each power terminal consecutively with each DC bus terminal as indicated in **Table 5-10**.

Table 5-10: Static Checks of Converter

DC Bus Terminal	Power Terminal			Multimeter Reading
	L1	L2	L3	
B+ (1st Overload Check) Insert red (+) multimeter lead.	Insert black (-) multimeter lead.	Insert black (-) multimeter lead.	Insert black (-) multimeter lead.	.OL
B- (2nd Overload Check) Insert black (-) multimeter lead.	Insert red (+) multimeter lead.	Insert red (+) multimeter lead.	Insert red (+) multimeter lead.	.OL
B- (1st Voltage Check) Insert red (+) multimeter lead.	Insert black (-) multimeter lead.	Insert black (-) multimeter lead.	Insert black (-) multimeter lead.	.25 – .55V DC (±10%)
B+ (2nd Voltage Check) Insert black (-) multimeter lead.	Insert red (+) multimeter lead.	Insert red (+) multimeter lead.	Insert red (+) multimeter lead.	.25 – .55V DC (±10%)

Note: Set the multimeter to the diode function, and check each motor terminal consecutively with each DC bus terminal as indicated in **Table 5-11**.

Table 5-11: Static Checks of Inverter

DC Bus Terminal	Motor Terminal on Contactor if Bypass or Output Contactor			Multimeter Reading
	T1	T2	T3	
B+ (1st Overload Check) Insert red (+) multimeter lead.	Insert black (-) multimeter lead.	Insert black (-) multimeter lead.	Insert black (-) multimeter lead.	.OL
B- (2nd Overload Check) Insert black (-) multimeter lead.	Insert red (+) multimeter lead.	Insert red (+) multimeter lead.	Insert red (+) multimeter lead.	.OL
B- (1st Voltage Check) Insert red (+) multimeter lead.	Insert black (-) multimeter lead.	Insert black (-) multimeter lead.	Insert black (-) multimeter lead.	.25 – .40V DC (±10%)
B+ (2nd Voltage Check) Insert black (-) multimeter lead.	Insert red (+) multimeter lead.	Insert red (+) multimeter lead.	Insert red (+) multimeter lead.	.25 – .40V DC (±10%)

Note: Set the multimeter to the ohm function, and check the power gµround terminal and DC bus terminals as indicated in **Table 5-12**.

Note: Frame 6 and larger use a "Hybrid" rectifier section. "Shown in Service Manual." Readings will be different when taking measurements from (B+) DC.

Table 5-12: Static Checks of DC Bus

DC Bus Terminal	DC Bus Terminal (B-)	Ground Terminal (Power)	Multimeter Reading
B+ (Overload Check) Insert red (+) multimeter lead.	Insert black (-) multimeter lead.	Not used.	.OL
B+ (1st Ohm Check) Insert black (-) multimeter lead.	Not used.	Insert red (+) multimeter lead.	O.L
B- (2nd Ohm Check) Insert black (-) multimeter lead.	Not used.	Insert red (+) multimeter lead.	O.L

Figure 5-7 is a detailed schematic to aid in performing the static checks.

Continuity Test to Ground

Test L1, L2, L3 to ground.
T1, T2, T3 to ground.

This should read .OL ohms.

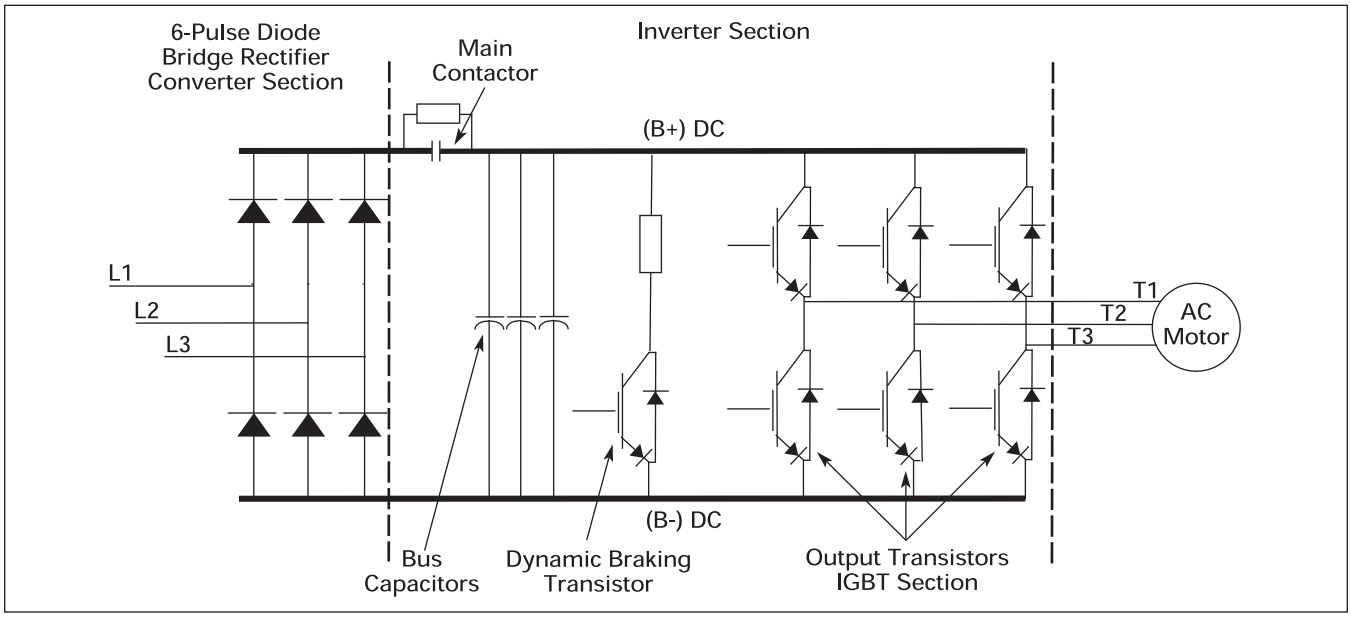

Figure 5-7: Schematic for Static Checks (Sample for Frames 4 and 5)

IntelliPass Control Wiring Instructions

Use the instructions and diagrams in Chapter 4 “Control Wiring” for wiring standard option boards A9 and A2.

In addition to these two boards, the IntelliPass Bypass includes option board B5, which is described in the following section.

Wiring Option Board B5

- This board is to be mounted in slot C.

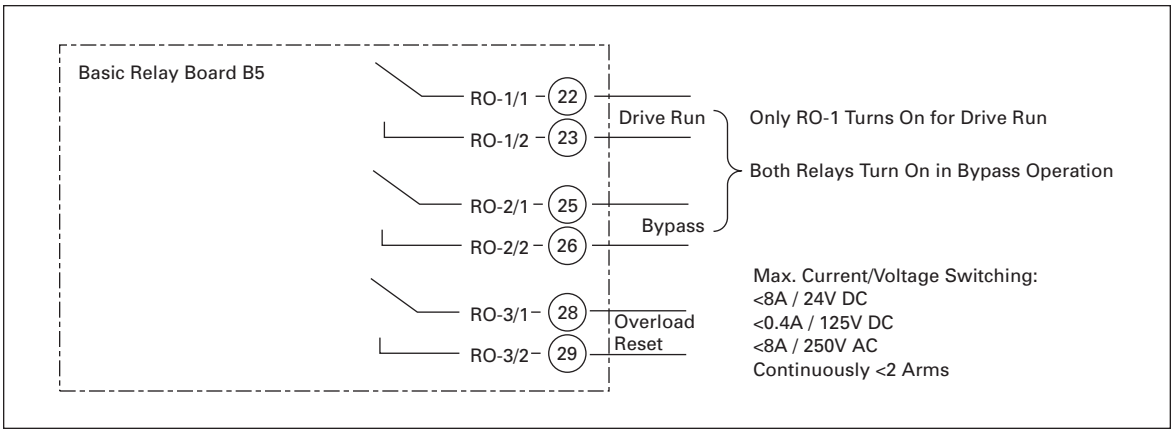

Figure 5-8: Option Board B5 Wiring Diagram

Table 5-13: Option Board B5 Terminal Descriptions

Terminal		Signal	Description and Parameter Reference	
22	RO-1/1	Common	Drive Run	Switching Capacity: 24V DC / 8A 250V AC / 8A 125V DC / 0.4A Min Switching Load: 5V/10 mA Continuously: <2 Arms
23	RO-1/2	Normally Open		
25	RO-2/1	Common	Bypass	Switching Capacity: 24V DC / 8A 250V AC / 8A 125V DC / 0.4A
26	RO-2/2	Normally Open		
28	RO-3/1	Common	Overload Reset	Switching Capacity: 24V DC / 8A 250V AC / 8A 125V DC / 0.4A
29	RO-3/2	Normally Open		

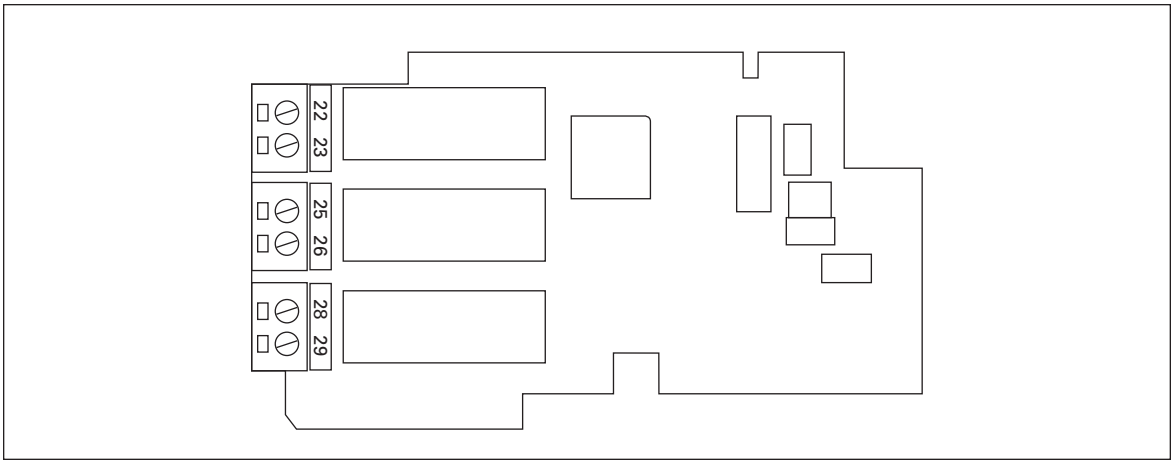

Figure 5-9: Option Board B5 Terminal Location

Note: Once selected, bypass operation will be controlled through keypad, I/O terminal or fieldbus. Bypass option is automatically available when B5 option board is installed in Slot C.

Enabling Bypass in Hand Mode

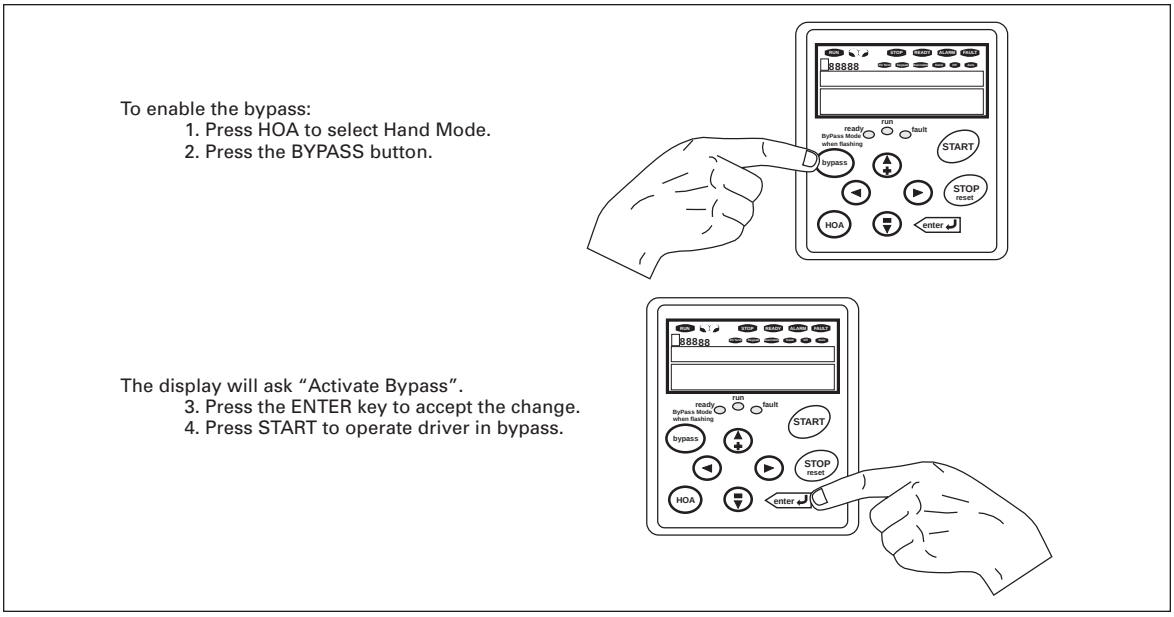

Figure 5-10: Enable Bypass

Additional Instructions for Keypad Operation

Procedure to run in bypass operation from keypad.

1. Press the BYPASS button: “Activate Bypass? Press ENTER” will appear on keypad display.
2. Press the HOA button to select desired control location, e.g. HAND. Bypass mode LED will start flashing.
3. Press the START button: “Motor Running in BYPASS!” will appear on the keypad display.

- Motor is running in bypass.
- Run LED is lit solid.

Procedure to return to drive operation from keypad.

1. Press the STOP button.
2. Press the BYPASS button: “Return to Drive? Press Enter!” will appear on keypad display.
3. Press the ENTER button to return to drive operation.

- Bypass is disabled.
- Ready LED is lit solid.

BYPASS will be disabled in all control sources only when B5 option board is removed from Slot C.

November 2009

Chapter 6 — Menu Information

Keypad Operation

The menu is navigated by using the left and right arrow buttons. If a reference level is available for setting, the up and down arrow buttons adjust the value. To exit the Operate Menu to access the other menus, depress the ENTER button for 2 seconds. While in the other menus, if there is no keypad activity, the display will return to the Operate Menu after one minute. **Figure 6-2** illustrates the Operate Menu button function.

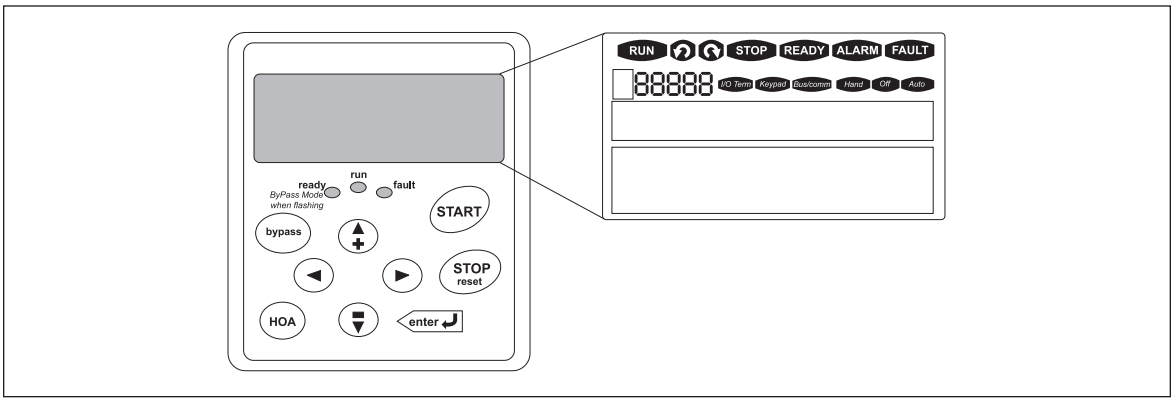

Figure 6-1: Keypad and Display

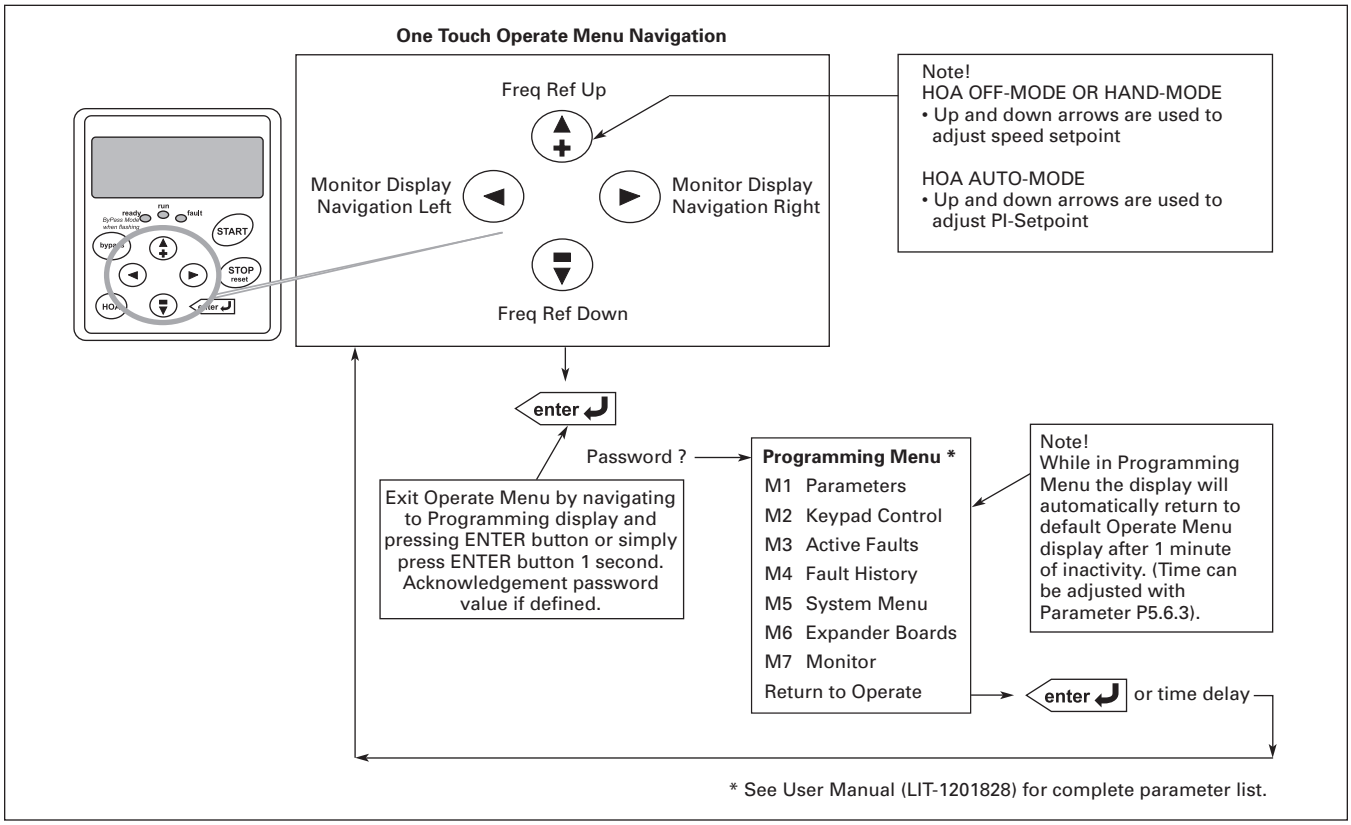

Figure 6-2: Operate Menu Navigation

Table 6-1: LCD Status Indicators

Indicator	Description
RUN	**Run** Indicates that the VSD Series drive is running and controlling the load in Drive or Bypass.
	Counterclockwise Operation The output phase rotation is **BAC**, corresponding to counterclockwise rotation of most motors.
	Clockwise Operation The output phase rotation is **ABC**, corresponding to clockwise rotation of most motors.
STOP	**Stop** Indicates that the VSD Series drive is stopped and not controlling the load.
READY	**Ready** Indicates that the VSD Series drive is ready to be started.
ALARM	**Alarm** Indicates that there is one or more active drive alarm(s).
FAULT	**Fault** Indicates that there is one or more active drive fault(s).
I/O Term	**I/O Terminal** Indicates that the I/O terminal has been chosen for control of start/stop – signals.
Keypad	**Keypad** Indicates that the keypad has been chosen for control of start/stop – signals.
Bus/comm	**Bus/Communications** Indicates that the communications bus has been chosen for control of start/stop – signals.
Hand	**Hand** Indicates that HAND has been chosen in the HOA control mode.
Off	**Off** Indicates that the VSD Series drive is not ready to operate. (Ready-indicator is OFF).
Auto	**Auto** Indicates that AUTO has been chosen in the HOA control mode.

Table 6-2: LED Status Indicators

Indicator	Description
ready	**Ready** — Steady Illumination Indicates that the VSD Series drive is ready to be started. **Ready** — Flashing Indicates that the VSD Series drive is in Bypass Mode.
run	**Run** — Steady Illumination Indicates that the VSD Series drive or bypass is operating and controlling the load. **Run** — Flashing Indicates that the VSD Series drive or bypass is going to start. (Waiting for the Interlock signal or delay time expiration.)
fault	**Fault** Indicates that there is one or more active drive fault(s).

Table 6-3: Navigation Buttons

Button	Description
START	**Start** This button operates as START button for normal operation when the “Keypad” is selected as the active control.
enter	**Enter** • confirmation of selections • leave the operating mode, if pressed ≥ 2 seconds (leaving the operating menu can be password protected) • reset the “Fault History” menu, if pressed 2 – 3 seconds while in the “Fault History” menu
STOP reset	**Stop/Reset** This button has four integrated functions. • motor STOP from the keypad • used to reset the active fault • reactivates “Start-Up Wizard” if pressed ≥ 5 seconds (Text “Start-Up Wizard Activated!” will appear on keypad display. • cancel “Start-Up Wizard” setup
bypass	**Bypass** Switches between the drive and bypass modes only when IntelliPass bypass is installed.
HOA	**HOA** Steps through Hand, Off and Auto control modes. Press “Enter” to select mode. If “Enter” is not pressed within 5 seconds, control mode will remain in previous control mode.
◄	**Left Arrow** • navigation button, movement to left • in programming mode, exit parameter group mode • in parameter edit mode, exits mode, backs up one step • cancels edited parameter (exit from a parameter edit mode)
►	**Right Arrow** • navigation button, movement to right • enter parameter group mode • enter parameter mode from group mode • set parameter to edit mode (= parameter value is blinking)
▲ + ▼ −	**Up and Down Arrows** • move either up or down the parameter group list in order to select the desired group • move either up or down the parameter list in order to select the desired parameter in the group • increase/decrease the reference value of the selected parameter

Main Menu Navigation

The data on the control keypad are arranged in menus and submenus.

The first menu level consists of menus M1 to M8 and is called the Main menu. These menus and their submenus are illustrated in **Figure 6-2**.

Navigation Tips

- To navigate within one level of menu, use the up and down arrows.
- To move deeper into the menu structure and back out, use the right and left arrows.
- To edit a parameter, navigate to show that parameter's value, and press the right arrow button to enter the edit mode. In edit mode, the parameter value will flash.
- When in edit mode, the parameter value can be changed by pressing the up or down arrow keys.
- When in edit mode, pressing the right arrow a second time will allow you to edit the parameter value digit by digit.
- To confirm the parameter change you must press the ENTER key. *The value will not change unless the ENTER button is pushed*.

Note: For special navigation tips for M8, see **Page 6-21**.

Menu Navigation:

Up Arrow — The up arrow advances to the next menu item.
For example, pressing the up arrow once will advance from M1 to M2.

Down Arrow — The down arrow backs up to the previous menu item.
For example, pressing the down arrow once will back up from M2 to M1.

Right Arrow — The right arrow will advance to the next level in the menu.
For example, pressing the right arrow once will advance from M2 to R2.1.

Left Arrow — The left arrow will back up one level in the menu structure.
For example, pressing the left arrow once will back up from R2.1 to M2.

	P5.6.1 Default Page
M1 Programming ①	1
G1.1 Quick Setup	
. . .	
G1.x Field Bus	
M2 Keypad Control	2
R2.1 Speed Setpoint	
P2.2 Keypad Direction	
. . .	
P2.5 PI-StPt Default	
M3 Active Faults	3
A3.1 Active Fault 1	
T3.1.1 Operation Days	
. . .	
T3.1.13 Zero Speed	
. . .	
A3.x Active Fault x	
M4 Fault History	4
H4.1 Most Recent Fault	
T4.1.1 Operation Days	
. . .	
T4.1.13 Zero Speed	
. . .	
H4.1.x Oldest Saved Fault	
M5 System Menu	5
S5.1 Language	
S5.2 Application	
S5.3 Copy Parameters	
S5.4 Compare Parameters	
S5.5 Security	
S5.6 Keypad Settings	
S5.7 Hardware Settings	
S5.8 System Information	
M6 Expander Boards	6
G6.1 Slot A Board	
. . .	
G6.5 Slot E Board	
M7 Monitor	7
V7.1 Output Frequency	
V7.2 Actual Speed	
. . .	
G7.26 Multimonitor ①	
M8 Operate Mode ②	8
O1 Output Frequency	
O2 Actual Speed	
. . .	
Ox . . .	

Figure 6-3: Main Menu Navigation

① Menu application dependent.
② For navigation of Operate Menu (M8), see **Figure 6-2** on **Page 6-1**.

Parameter Menu (M1)

The Parameter Menu is a single or multi-level menu dependent upon the application in use, arranged by the parameter group items. **Figure 6-4** illustrates this for the Generic PI application. Parameters and parameter groups are explained in further detail in **Chapters 9 – 15**.

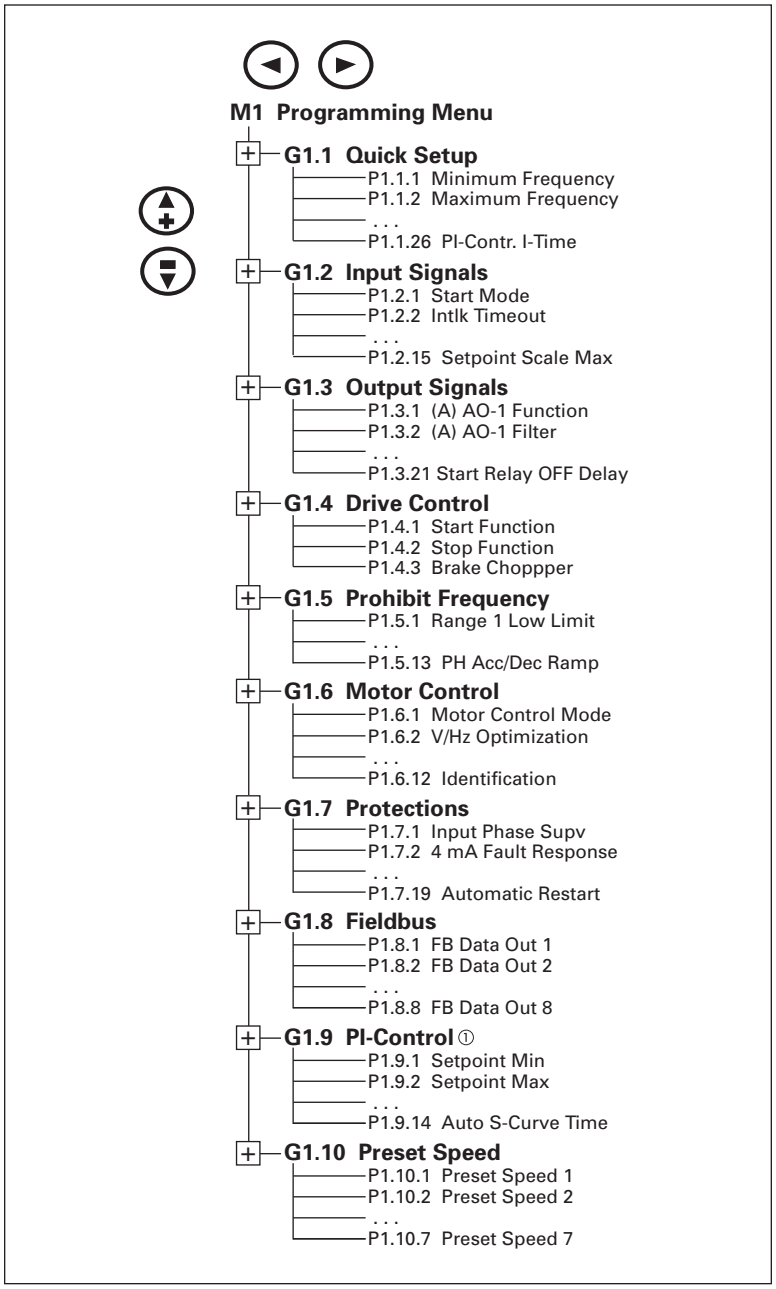

Figure 6-4: Parameter Menu Structure Example

① Not available in Remote Input Application.

Keypad Control Menu (M2)

In the Keypad Control Menu, you can set the frequency reference, choose the motor direction for keypad operation, and determine if the STOP button will be active at all times. See **Figure 6-5**.

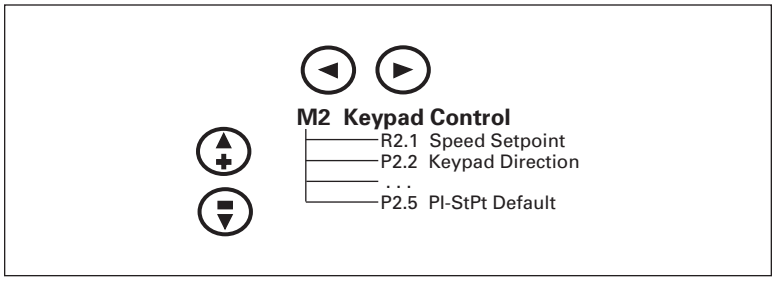

Figure 6-5: Keypad Control Menu

R2.1 Speed Setpoint

Range: 0 — Max. Frequency
Units: %

SPEED SETPOINT

This displays and allows the operator to edit the keypad speed setpoint. A change takes place immediately. This reference value will not influence the output frequency unless the keypad has been selected as the active control place.

P2.2 Keypad Direction

Range: Forward, Reverse Default: Forward

KEYPAD DIRECTION

This allows the operator to change the rotation direction of the motor. This setting will not influence the rotation direction of the motor unless the keypad has been selected as the active control place.

P2.3 Stop Button Active

Range: Yes, No Default: Yes

STOPBUTTONACTIVE

By default, pushing the STOP button will **always** stop the motor regardless of the selected control place. If this parameter is set to **No**, the **STOP** button will stop the motor only **when the keypad has been selected as the active control place**. The Start Command must be toggled or re-issued to restart the drive.

R2.4 PI Setpoint

Range: Application Dependent Default: Application Dependent

PI SETPOINT

PI regulators setpoint. Parameter not available in Remote Input Application.

P2.5 PI Setpoint Default

Range: Application Dependent Default: Application Dependent

PI STPT DEFAULT

PI regulators default setpoint. This parameter is set in Start-Up Wizard. Parameter not available in Remote Input Application.

Active Faults Menu (M3)

When a fault occurs, the drive stops. The sequence indication F1, the fault code, a short description of the fault and the fault type symbol will appear on the display. In addition, the indication FAULT or ALARM is displayed and, in case of a FAULT, the red LED on the keypad starts to blink. If several faults occur simultaneously, the sequence of active faults can be browsed with the Browser buttons. See **Figure 6-6**.

The active faults memory can store the **maximum of 10** faults in the sequential order of appearance. The fault remains active until it is cleared with the STOP/RESET button or with a reset signal from the I/O terminal. Upon fault reset the display will be cleared and will return to the same state it was before the fault trip.

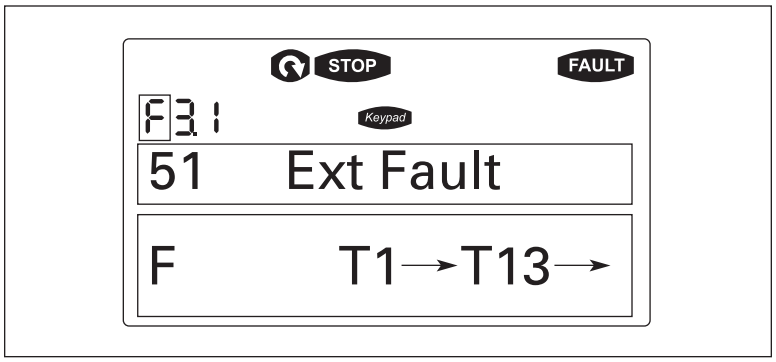

Figure 6-6: Active Fault Display Example

CAUTION

Remove any External Start signals or permissives before resetting the fault to prevent an unintentional restart of the drive, which could result in personal injury or equipment damage.

Fault Type

Range: A, F, AR, FT

FAULT TYPE

There are four different types of faults. These faults and their definitions are given in **Table 6-4**.

Table 6-4: Fault Types

Fault Type	Fault Name	Description
A	Alarm	This type of fault is a sign of an unusual operating condition. It does not cause the drive to stop, nor does it require any special actions. The "A fault" remains in the display for about 30 seconds.
F	Fault	An "F fault" is a kind of fault that makes the drive stop. Actions need to be taken in order to restart the drive.
AR	Auto-Restart Fault	If an "AR fault" occurs the drive will also stop immediately. The fault is reset automatically and the drive tries to restart the motor. If the restart is not successful, a fault trip (FT) occurs.
FT	Fault Trip	If the drive is unable to restart the motor after an AR fault, an FT fault occurs. The effect of the "FT fault" is the same as that of the F fault — the drive is stopped.

Fault Code

Range: 1 – 81

Fault codes indicate the cause of the fault. A list of fault codes, their descriptions, and possible solutions can be found in **Appendix B — Fault and Warning Codes**.

Fault Time Data Record

Range: T.1 – T.13

In this menu, important data recorded at the time the fault is available. This feature is intended to help the user or the service person to determine the cause of fault. **Table 6-5** indicates the information that is recorded.

Table 6-5: Fault Time Data

Data	Units	Description
T.1 ①	D	Counted operation days (Fault 43: Additional code)
T.2 ①	hh:mm:ss (d)	Counted operation hours (Fault 43: Counted operation days)
T.3	Hz hh:mm:ss	Output frequency (Fault 43: Counted operation hours)
T.4 T.5 T.6 T.7 T.8	A V % % V	Motor current Motor voltage Motor power Motor torque DC bus voltage
T.9 T.10 T.11 T.12 T.13	°C — — — —	Unit temperature Run status Direction Warnings Zero speed

① Real time record.

If real time is set, T.1 and T.2 will appear as follows:

T.1	yyyy-mm-dd	Counted operation days (Fault 43: Additional code)
T.2	hh:mm:ss.sss	Counted operation hours (Fault 43: Counted operation days)

Fault History Menu (M4)

All faults are stored in the Fault History Menu, which can be viewed by using the Browser buttons. Additionally, the Fault time data record pages are accessible for each fault as in the Active Faults Menu described above. See **Figure 6-7**.

The drive's memory can store a **maximum of 30 faults**, in the order of appearance. If there are 30 uncleared faults in the memory, the next occurring fault will erase the oldest fault from the memory.

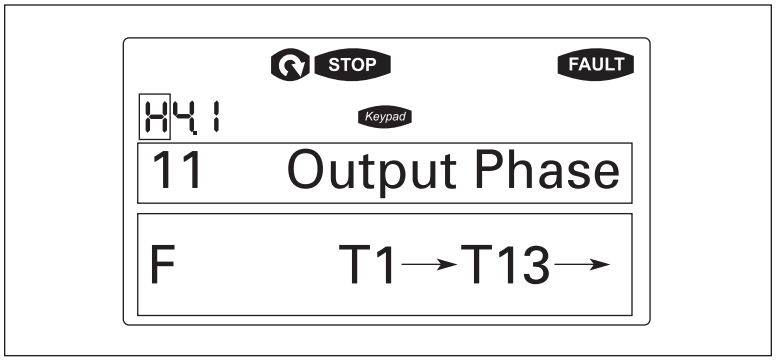

Figure 6-7: Sample Fault History Display

Note: Pressing the ENTER button for 3 seconds will clear the entire fault history.

System Menu (M5)

The controls associated with the general use of the drive, such as application selection, customized parameter sets or information about the hardware and software are located in the System Menu. Password protection can be activated by parameter ***S5.5.1***.

Descriptions of the system menu parameters are illustrated in **Figure 6-8**.

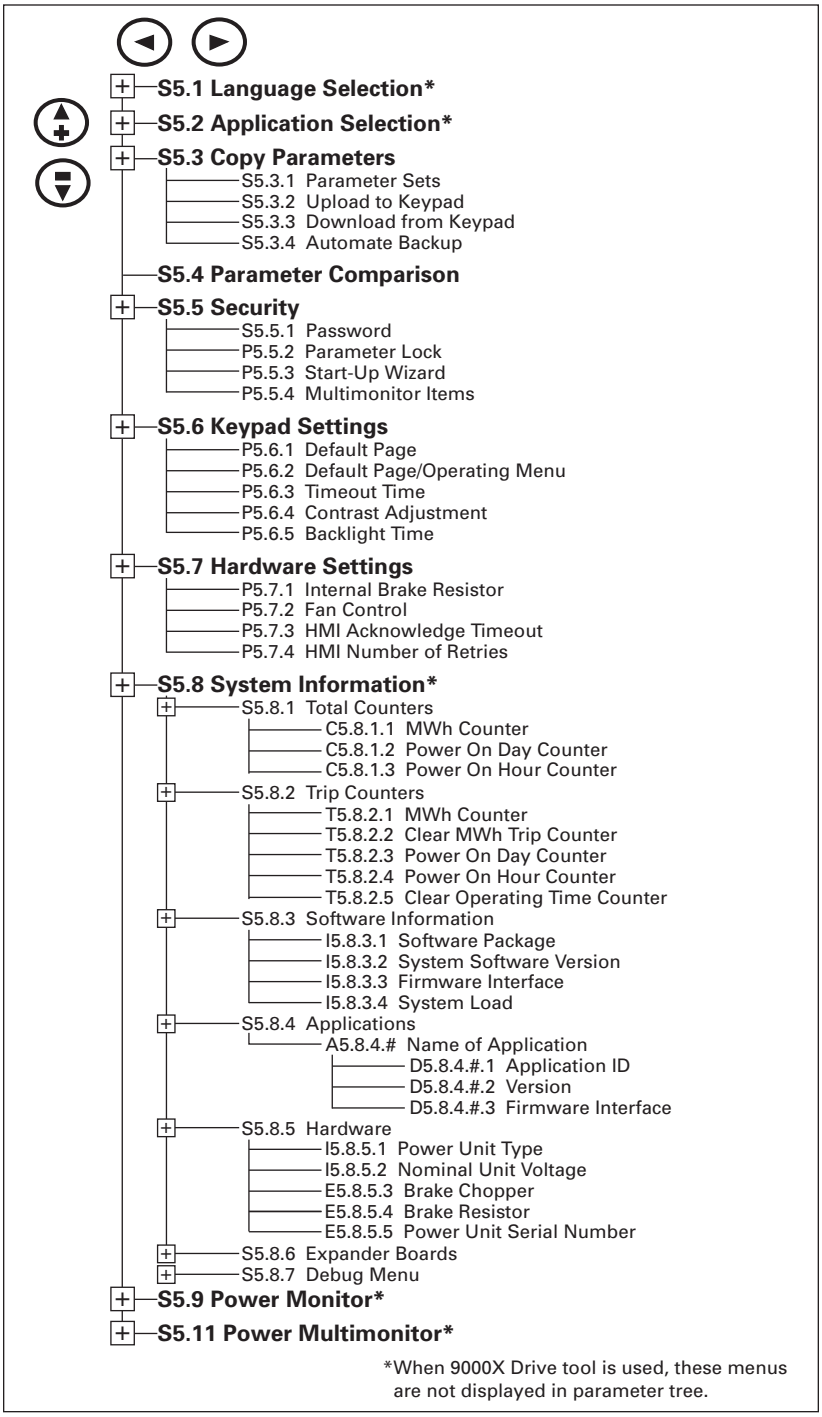

Figure 6-8: System Menu Keypad Structure

System Menu Parameters

S5.1 Language Selection

Range: English (Spanish①, French①, Portuguese①) Default: English

LANGUAGE

This parameter offers the ability to control the drive through the keypad in the language of your choice. Currently available language: English.

① Available in the future.

S5.2 Application Selection

Default: Remote Input

APPLICATION

This parameter sets the active application.

When changing applications, you will be asked if you want the parameters of the new application to be uploaded to the keypad. If you wish to load the new application parameters, push the ENTER button. Pushing any other button saves the parameters of the previously used application in the keypad.

System Menu Copy Parameter Options (S5.3)

The parameter copy function is used when the operator wants to copy one or all parameter groups from one drive to another. All the parameter groups are first uploaded to the keypad, then the keypad is connected to another drive and then the parameter groups are downloaded to it (or possibly back to the same drive).

Note: Before any parameters can successfully be copied from one drive to another, the drive must be stopped when the parameters are downloaded to it.

S5.3.1 Parameter Sets

Range: 0 – 4

PARAMETER SETS

This parameter allows you to reload the factory default parameter values, and to store and load two customized parameter sets.

0 Load Factory defaults
1 Store Set 1
2 Load Set 1
3 Store Set 2
4 Load Set 2

S5.3.2 Upload to Keypad

UP TO KEYPAD

This function uploads all existing parameter groups to the keypad.

S5.3.3 Download from Keypad

Range: 0 – 3 Default: 0 (All parameters)

DOWN FROM KEYPAD

This function downloads one or all parameter groups from the keypad to the drive.

0 All parameters
1 All, no motor
2 Application parameters

S5.3.4 Automatic Backup

Range: Yes, No Default: Yes

AUTO.BACKUP

This parameter activates and deactivates the parameter backup function. When the Parameter backup function is activated, the keypad makes a copy of the parameters and settings in the currently active application. When applications are changed, you will be asked if you wish the parameters of the **new** application to be uploaded to the keypad. For this to happen, push the ENTER button. If you wish to keep the copy of the parameters of the **previously used** application saved in the keypad push any other button.

Note: Parameters saved in the parameter settings of S5.3.1 will be deleted when applications are changed. If you want to transfer the parameters from one application to another you have to upload them to the keypad first.

System Menu Parameter Comparison Options (S5.4)

S5.4 Parameter Comparison

PARAMETER COMPARISON

With the Parameter Comparison function, you can compare the actual parameter values to the values of your customized parameter sets and those loaded to the control keypad.

The actual parameter values are first compared to those of the customized parameter Set1. If no differences are detected, a “0” is displayed on the lowermost line of the keypad.

If any of the parameter values differ from those of the Set1 parameters, the number of the deviations is displayed together with symbol P (e.g. P1 ➠ P5 = five deviating values).

By pressing the right arrow button once again you will see both the actual value and the value it was compared to. In this display, the value on the Description line (in the middle) is the default value, and the one on the value line (lowermost line) is the edited value. You can also edit the actual value by pushing the Right Arrow button.

Actual values can also be compared to Set2, Factory Settings and the Keypad Set values.

Security Menu Parameter Options (S5.5)

Note: The Security submenu is protected with a password. Store the password in a safe place.

S5.5.1 Password

Range: 0 – 65535 Default: 0 = Not in use

PASSWORD

The application selection can be protected against unauthorized changes with the Password function. When the password function is enabled, the user will be prompted to enter a password before application changes, parameter value changes, or password changes. Password can also be used to prevent user from exiting the operating menu.

By default, the password function is not in use. If you want to activate the password, change the value of this parameter to any number between 1 and 65535. The password will be activated after the Timeout time (***Timeout Time***) has expired.

To deactivate the password, reset the parameter value to 0. Back door password is 2277.

P5.5.2 Parameter Lock

Range: ChangeEnable, ChangeDisabl Default: ChangeDisabl

PARAMETER LOCK

This function allows the user to prohibit changes to the parameters. If the parameter lock is activated the text *LOCKED* will appear on the display if you try to edit a parameter value.

Note: This function does not prevent unauthorized editing of parameter values.

P5.5.3 Start-Up Wizard

Range: Yes, No — Default: No

START-UP WIZARD

The Start-Up Wizard facilitates commissioning the drive. If selected active, the Start-Up Wizard prompts the operator for the language and application desired and then advances through the start-up parameter list. After completion it allows the user to repeat the Start-Up Wizard or return to the default page, the Operate Menu. The Start-Up Wizard in always active for the initial power up of the drive.

This feature can also be selected by pressing the STOP/RESET button for 5 seconds. Display will then show "Start-Up Wizard Activated". Unit must then be powered down and "SUW" will be displayed on powerup.

Yes = Startup Wizard turns on every time power turns on.

P5.5.4 Multimonitor Items

Range: ChangeEnable, ChangeDisabl — Default: ChangeEnable

MULTIMON.ITEMS

The keypad display can display three actual monitored values at the same time. This parameter determines if the operator is allowed to replace the values being monitored with other values.

Keypad Settings (S5.6)

There are five parameters (***Default Page*** to ***Backlight Time***) associated with the keypad operation:

P5.6.1 Default Page

Range: 0 – 8 — Default: 0

DEFAULT PAGE

This parameter sets the view the display shows when entering the Programming Mode. See **Figure 6-3** on **Page 6-5**.

0,1 M1 Programming
2 M2 Keypad Control
3 M3 Active Faults
4 M4 Fault History
5 M5 System Menu
6 M6 Expander Boards
7 M7 Monitor
8 M8 Operate Mode

P5.6.2 Default Page in the Operating Menu

Range: 0 – 16 — Default: 0

DEFAULT PAGE/OM

Here you can set the location in the Operating menu to which the display automatically moves as the set ***Timeout Time*** expires, or when the keypad power is switched on. See **Table 6-14** on **Page 6-21**.

0,1 O1 Output Frequency
2 O2 Actual Speed
3 O3 Speed Setpoint
...
16 O16 Multimonitor

P5.6.3 Timeout Time

Range: 0 – 65,535 — Default: 60
Units: Seconds

TIMEOUT TIME

The ***Timeout Time*** setting defines the time after which the keypad display returns to the ***Default Page***.

Note: If the ***Default Page*** value is 0 the ***Timeout Time*** setting has no effect.

P5.6.4 Contrast Adjustment

Default: 18

CONTRAST ADJUSTMENT

If the display is not clear, you can adjust the keypad contrast with this parameter.

P5.6.5 Backlight Time

Range: 1 – 65,535 or Forever

Default: 10

Units: Minutes

BACKLIGHT TIME

This parameter determines how long the backlight stays on before going out. You can select any time between 1 and 65,535 minutes or "Forever". 0 minutes = Forever.

Hardware Settings (S5.7)

The Hardware Settings submenu (S5.7) provides parameters for setting information on Internal brake resistor connection, Fan control, Keypad acknowledge timeout and Keypad retries.

P5.7.1 Internal Brake Resistor Connection

Range: Connected – Not Connected

Default: Connected

INTERNBRAKERES

With this function you tell the drive whether the internal brake resistor is connected or not.

If your drive has an internal brake resistor, the default value of this parameter is "Connected". However, if it is necessary to increase braking capacity by installing an external brake resistor, or if the internal brake resistor is disconnected, it is advisable to change the value of this function to "Not Connected" in order to avoid unnecessary fault trips.

Note: The brake resistor is available as an option for all drives. It can be installed internally in frame sizes FR4 to FR6.

P5.7.2 Fan Control

Range: Continuous, Temperature

Default: Continuous

FAN CONTROL

This function sets the control method of the drive's cooling fan. You can set the fan to run continuously when the power is switched on or to run based on the temperature of the unit. If the latter function has been selected, the fan is switched on automatically when the heatsink temperature reaches 60°C. The fan receives a stop command when the heatsink temperature falls to 55°C. The fan runs for about a minute after receiving the stop command or switching on the power, as well as after changing the value from "Continuous" to "Temperature".

Note: The fan runs continuously, regardless of this setting, when the drive is in RUN state.

P5.7.3 HMI Acknowledge Timeout

Range: 200 – 5,000 Default: 200
Units: mseconds

HMI ACK TIMEOUT

This function allows the user to change the timeout of the Keypad acknowledgement time.

Note: If the drive has been connected to a PC with a serial cable, the default values of ***Keypad Acknowledge Timeout*** and ***Number of Retries to Receive Keypad Acknowledgement*** must not be changed.

If the drive has been connected to a PC via a modem and there is delay in transferring messages, the value of ***Keypad Acknowledge Timeout*** must be set according to the delay as follows:

Example:

- Transfer delay between the drive and the PC is found to be = 600 ms
- The value of Keypad Acknowledge Timeout is set to 1200 ms (2 x 600, sending delay + receiving delay)
- The corresponding setting is then entered in the [Misc] section of the file NCDrive.ini:

  Retries = 5

  AckTimeOut = 1200

  TimeOut = 5000

It must also be considered that intervals shorter than the ***Keypad Acknowledge Timeout*** time cannot be used in drive monitoring.

P5.7.4 Number of Retries to Receive Keypad Acknowledge-ment

Range: 1 – 10 Default: 5

KEYPAD RETRY

With this parameter you can set the number of times the drive will try to receive an acknowledgement when it has not been received within the acknowledgement time (***Keypad Acknowledge Timeout***) or if the received acknowledgement is faulty.

System Information (S5.8)

This section contains hardware and software information as well as operation information.

S5.8.1 Total Counters

TOTAL COUNTERS

In the ***Total Counters*** page you will find information related to the drive operating times, i.e. the total numbers of MWh, operating days and operating hours. See **Table 6-6**.

Unlike the counters for the ***Trip Counters***, these counters cannot be reset.

Note: The Power On time counters, days and hours, operate whenever power is applied to the drive.

Table 6-6: Total Counters

Number	Name	Description
C5.8.1.1	MWh counter	Megawatt hours total operation time counter
C5.8.1.2	Power On day counter	Number of days the drive has been supplied with power
C5.8.1.3	Power On hour counter	Number of hours the drive has been supplied with power

S5.8.2 Trip Counters

TRIP COUNTERS

The ***Trip Counters*** are counters whose values can be reset to zero. The resettable counters are shown in **Table 6-7**.

Table 6-7: Trip Counters

Number	Name	Description
T5.8.2.1	MWh counter	Megawatts hours since last reset
P5.8.2.2	Clear MWh counter	Resets megawatts hours counter
T5.8.2.3	Power On day counter	Number of days the drive has been run since the last reset
T5.8.2.4	Power On hour counter	Number of hours the drive has been run since the last reset
P5.8.2.5	Clr Optime cntr	Resets the operating day and hour counters

Note: The ***Trip Counters*** operate only when the motor is running.

S5.8.3 Software Information

SOFTWARE

The Software information page includes information on the following software related topics:

Table 6-8: Software Information

Number	Name	Description
I5.8.3.1	Software package	SVX00031V010 or later
I5.8.3.2	System software version	11.62.7486 or later
I5.8.3.3	Firmware interface	4.45 or later
I5.8.3.4	System load	XX % (actual value)

S5.8.4 Application Information

APPLICATIONS

The Application information page includes information on not only the application currently in use but also all other applications loaded into the drive. The information available is shown in **Table 6-9**. Note that the “x” in the table refers to the sequential number of the application in the list.

Table 6-9: Application Information

Name	Content
A5.8.4.x	Application name
D5.8.4.x.1	Application ID
D5.8.4.x.2	Version
D5.8.4.x.3	Firmware interface

S5.8.5 Hardware Information

HARDWARE

The Hardware information page provides information on the following hardware-related topics:

Table 6-10: Hardware Information

Number	Content
I5.8.5.1	Nominal power of the unit
I5.8.5.2	Nominal voltage of the unit
E5.8.5.3	Brake chopper
E5.8.5.4	Brake resistor
E5.8.5.5	Power unit serial number

S5.8.6 Expander Board Information

EXPANDER BOARDS

This parameter and its sub-items provide information about the basic and option boards plugged into the control board as shown in **Table 6-11**. Note that the “x” in the table refers to the sequential number of the slot, with slot A being “1” and slot E being “5”.

Table 6-11: Expander Board Information

Number	Content
E5.8.6.x	Slot “x” board identification
E5.8.6.x.1	Operating state
E5.8.6.x.2	Software version

See option board manual for additional information data.

S5.8.7 Debug Menu

DEBUG

This menu is meant for advanced users and application designers. Contact the factory for any assistance needed.

S5.9 Power Monitor

POWER MONITOR

Table 6-12: Drive Output Phase Current Measurement

Number	Content
V5.9.1	IU filtered, Phase 1
V5.9.2	IV filtered, Phase 2
V5.9.3	IW filtered, Phase 3

S5.10 Reserved

Parameter not displayed, reserved for future use.

S5.11 Power Multi-monitoring

POWER MULTIMON

Displays all three output phase currents simultaneously.

Expander Board Menu (M6)

The Expander Board Menu makes it possible for the user to:

- to see what expander boards are connected to the control board and
- to access and edit the parameters associated with the expander board.

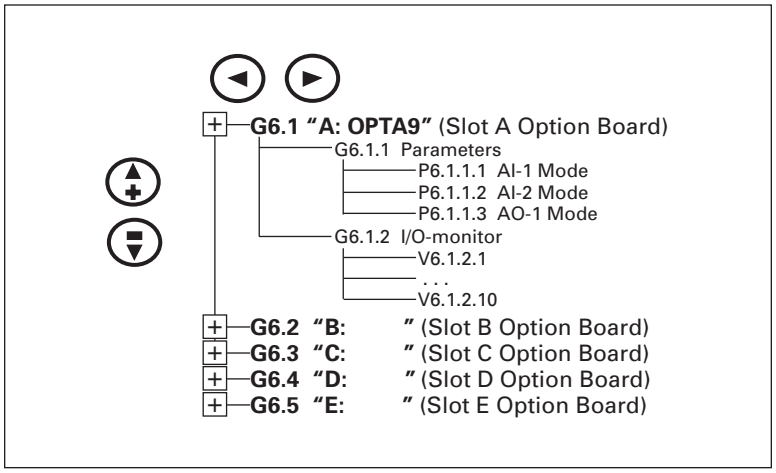

Figure 6-9: Expander Board Menu Structure

Example of Expander Board Parameters for Option Board A9

P6.1.1.1 AI-1 Mode

Range: 1 – 5 Default: 3

AI-1 MODE

Analog Input 1 input options:

1 0 – 20 mA
2 4 – 20 mA
3 0 – 10V DC
4 2 – 10V DC
5 -10 – +10VP

P6.1.1.2 AI-2 Mode

Range: 1 – 5 Default: 1

AI-2 MODE

Analog Input 2 input options:

1 0 – 20 mA
2 4 – 20 mA ①
3 0 – 10V DC ①
4 2 – 10V DC ①
5 -10 – +10VP ①

① Values 2 – 5 require changing pins. See **Figure [?]** on **Page [?]**. {THIS WAS DELETED}

P6.1.1.3 AO-1 Mode

Range: 1 – 4 Default: 1

AO-1 MODE

Analog Output 1 output options:

1 0 – 20 mA
2 4 – 20 mA
3 0 – 10V DC
4 2 – 10V DC

Monitoring Menu (M7)

The Monitoring Menu items are meant for viewing parameter values during operation. Monitored values are updated every 0.3 sec. Monitored items are identified by item numbers V7.1 to V1.xx, where "xx" varies by application. **Table 6-13** provides an example of the monitored values for the **Generic PI** application.

Monitored parameters are not editable from this menu (See Parameter Menu [M1] to change parameter values).

Table 6-13: Monitoring Menu Items — Generic PI Application Example

Code	Signal Name	Unit	ID	Description
V7.1	Actual speed	%	1	Actual motor speed between min and max frequency
V7.2	Output frequency	Hz	2	Output frequency to motor
V7.3	Speed Setpoint	%	3	Speed Setpoint
V7.4	Motor speed	rpm	4	Calculated motor speed in rpm
V7.5	Motor current	A	5	Motor current
V7.6	Motor torque	%	6	Calculated torque as a percentage of nominal torque
V7.7	Motor power	%	7	Calculated motor shaft power
V7.8	Motor voltage	V	8	Calculated motor voltage
V7.9	DC-Bus voltage	V	9	DC-Bus voltage
V7.10	Unit temperature	°F	10	Heatsink temperature
V7.11	Motor temperature	%	11	Calculated motor temperature
V7.12	Analog input 1	V	12	Analog input AI-1
V7.13	Analog input 2	mA	13	Analog input AI-2
V7.14	DI-1, DI-2, DI-3	—	14	Digital input status (**Figure 6-10**)
V7.15	DI-4, DI-5, DI-6	—	15	Digital input status (**Figure 6-11**)
V7.16	DO-1, RO-1, RO-2	—	16	Digital and relay output status (**Figure 6-12**)
V7.17	Analog Iout	mA	17	Analog output AO-1
V7.18	Active Fault Code		18	Active Fault Code for fieldbus use
V7.19	Active Warning Code		19	Active Warning Code for fieldbus use
V7.20	Status Word		20	Status Word for fieldbus use
V7.21 ②	PI Setpoint	% ①	21	PI Setpoint
V7.22 ②	PI Input	% ①	22	PI Input
V7.23 ②	PI error	% ①	23	Calculated error between PI actual and reference values
V7.24 ②	PI output	%	24	PI output (speed reference when PI active)
G7.25	Multimonitor		—	Displays three selectable monitoring values

① Units will vary depending on active application.
② Not available in Remote Input application.

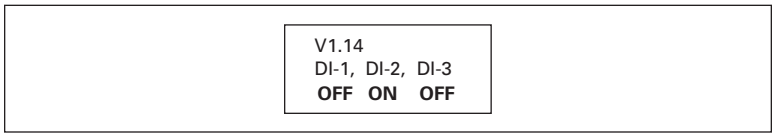

Figure 6-10: Digital Inputs — DI-1, DI-2, DI-3 Status

```
V1.15
DI-4,  DI-5,  DI-6
ON    OFF   OFF
```

Figure 6-11: Digital Inputs — DI-4, DI-5, DI-6 Status

```
V1.16
DO-1,RO-1,RO-2
OFF   OFF   ON
```

Figure 6-12: Digital and Relay Outputs — DO-1, RO-1, RO-2 Status

Multimonitor (G7.25)

This parameter allows the viewing and selection (if allowed by System menu item, P5.5.4) of three simultaneously monitored items from the Monitored Menu Items shown in **Table 6-13**. Use the right arrow key to select the item to be modified and then the up or down arrow keys to select the new item. Press the ENTER key to accept the change.

Operate Menu (M8)

The Operate Menu provides a easy to use method of viewing key numerical Monitoring Menu items. Some applications also support the setting of reference values in this menu. The items displayed vary by application. **Table 6-14** is an example for the Generic PI application.

Table 6-14: Operate Menu Items — Generic PI Application Example

Index	Signal Name	Unit	Description
O1	Output Frequency	Hz	Actual motor frequency
O2	Actual Speed	%	Actual motor speed between min and max frequency
O3	Speed Setpoint	%	Speed Setpoint (Can be Keypad on AI-1/AI-2)
O4	Motor Speed	rpm	Actual motor speed
O5	Motor Current	A	Measured Motor Current
O6	Motor Torque	%	Calculated Motor Torque
O7	Motor Power	%	Calculated Motor Power
O8	Motor Voltage	V	Measured Motor Voltage
O9	DC-Bus Voltage	V	Measured DC-Bus Voltage
O10	Unit Temperature	°F	Heatsink temperature
O11	Motor Temperature	%	Calculated motor temperature based on the motor nameplate information and actual motor load
O12 ②	PI-Setpoint	% ①	PI Setpoint
O13 ②	PI-Input	% ①	PI Input (measured) value
O14 ②	PI-Error Value	% ①	Calculated error between PI actual and reference values
O15 ②	PI-Output	%	PI output (speed reference when PI active)
O16	Multimonitor	①	Displays three values simultaneously

① Units will vary depending on active application.
② Not available in Remote Input application.

Chapter 7 — Start-Up

Safety Precautions

Before start-up, observe the following warnings and safety instructions.

⚠ WARNING

1. Internal components and circuit boards (except the isolated I/O terminals) are at utility potential when the VSD Series drive is connected to the line. This voltage is extremely dangerous and may cause death or severe injury if you come in contact with it.
2. When the VSD Series drive is connected to the utility, the motor connections U (T1), V (T2), W (T3) and DC-link/brake resistor connections B–, B+ and R– are live even if the motor is not running.
3. Do not make any connections when the VSD Series drive is connected to the utility line.
4. Do not open the cover of the VSD Series drive immediately after disconnecting power to the unit, because components within the drive remain at a dangerous voltage potential for some time. Wait until at least five minutes after the cooling fan has stopped and the keypad or cover indicators are dark before opening the VSD Series drive cover.
5. The control I/O terminals are isolated from the utility potential, but relay outputs and other I/Os may have dangerous external voltages connected even if power is disconnected from the VSD Series drive.
6. Before connecting to the utility make sure that the cover of the VSD Series drive is closed.

Sequence of Operation

1. Read and follow all safety precautions.
2. At installation ensure:
   a. That the VSD Series drive and motor are connected to ground.
   b. That the utility and motor cables are in accordance with the installation and connection instructions as detailed in **Chapter 3**.
   c. That the control cables are located as far as possible from the power cables as detailed in **Chapter 4** and **Table 3-1**. That control cable shields are connected to protective ground. That no wires make contact with any electrical components in the VSD Series drive.
   d. That the common input of digital input groups is connected to 24V DC or ground of the I/O terminal supply or an external supply as detailed in **Chapter 4** and **Figure 4-3**.
3. Check the quality of the cooling air as detailed in **Chapter 2**.
4. Check that moisture has not condensed inside the VSD Series drive.
5. Check that all START/STOP switches connected to the I/O terminals are in the STOP state.
6. Connect the VSD Series drive to the utility and switch the power on.
7. Use start-up wizard. It is active by default, if not keep STOP/RESET button pressed 5 seconds to activate it. Start-up wizard will guide you through correct application-specific parameter settings, like motor nameplate values etc.

8. Perform either Test A or Test B without the motor connected to the VSD Series drive.

   As a default, these tests should be done with the Remote Input application.

   Test A — Control from the Control Panel.

   - Apply input power to the VSD Series drive.
   - Press HOA button until HAND LCD is flashing, then press ENTER.
   - Press the START button.
   - Press up arrow (+) or down arrow (-) to get speed setpoint.
   - Check that the actual speed follows the setpoint (operate menu display 01).
   - Press the STOP/RESET button.

   Test B — Control from the I/O Terminals.

   - Apply input supply power to the VSD Series drive.
   - Change control from the keypad to the I/O terminals. Press HOA button until AUTO LCD is flashing, then press ENTER. Start drive by closing DI-1.
   - Change the speed setpoint, from where “Setpoint Source Auto” (P1.1.15) has been selected.
   - Check that the actual speed follows the setpoint (operate menu display 01).
   - Stop the drive by opening the start contact at DI-1.

Disconnect all power to the VSD Series drive. Wait until the cooling fan on the unit stops and the indicators on the panel are not lit. If no keypad is present, check the indicators in the cover. Wait at least five more minutes for the DC bus to discharge. Ensure bus voltage has discharged by measuring B+ and B- with DC voltage. Connect the motor to the VSD Series drive and check for correct motor rotation. If possible, perform a start-up test with the motor connected to the VSD Series drive but not connected to the process. If the VSD Series drive must be tested with the motor connected to the process, perform it under no-load or light load conditions.

Start-Up Wizard — Duct Static, Building Static, Pressure Control, Temperature Control, Generic PI

Upon initial power up, the **Start-Up Wizard** guides the commissioner through the basic VSD Series setup. The **Start-Up Wizard** may be set to function upon power up by setting parameter P5.5.3, or by pressing the STOP/RESET button for 5 seconds while in the "Operate Menu". The display will read "Start-Up Wizard Activate!" after 5 seconds.

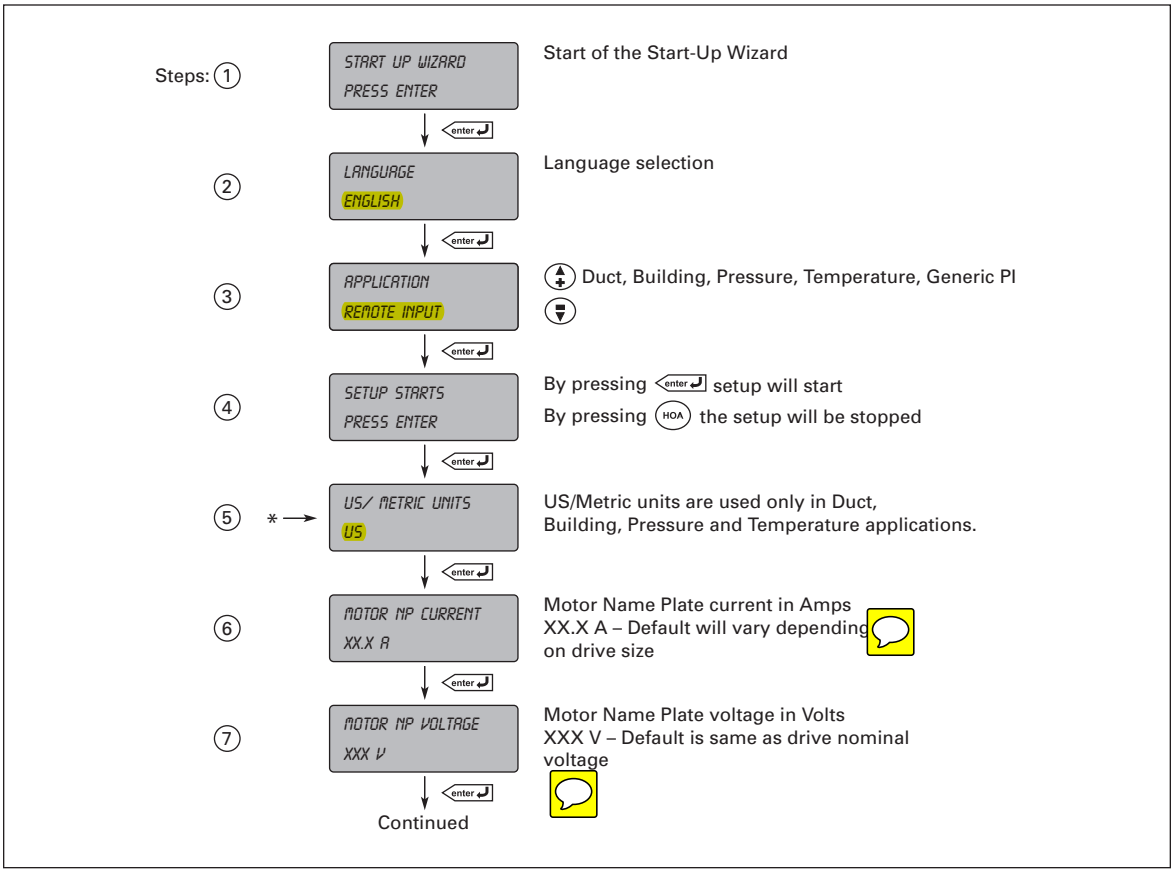

Figure 7-1: Start-Up Wizard Navigation (1 of 3)

Note: Use ↑↓ for changing parameter. Then press ENTER to save and move forward.

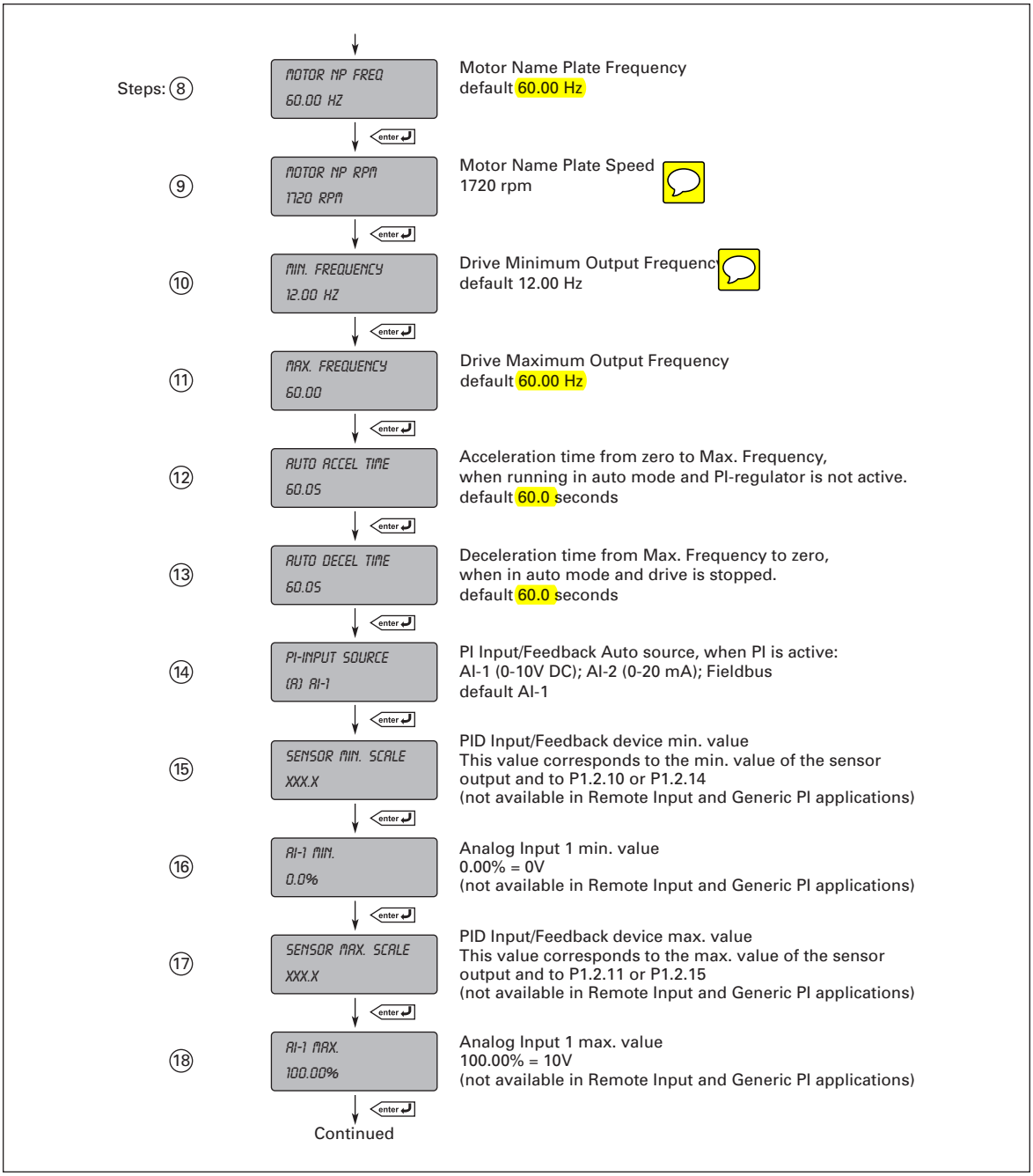

Figure 7-2: Start-Up Wizard Navigation (2 of 3)

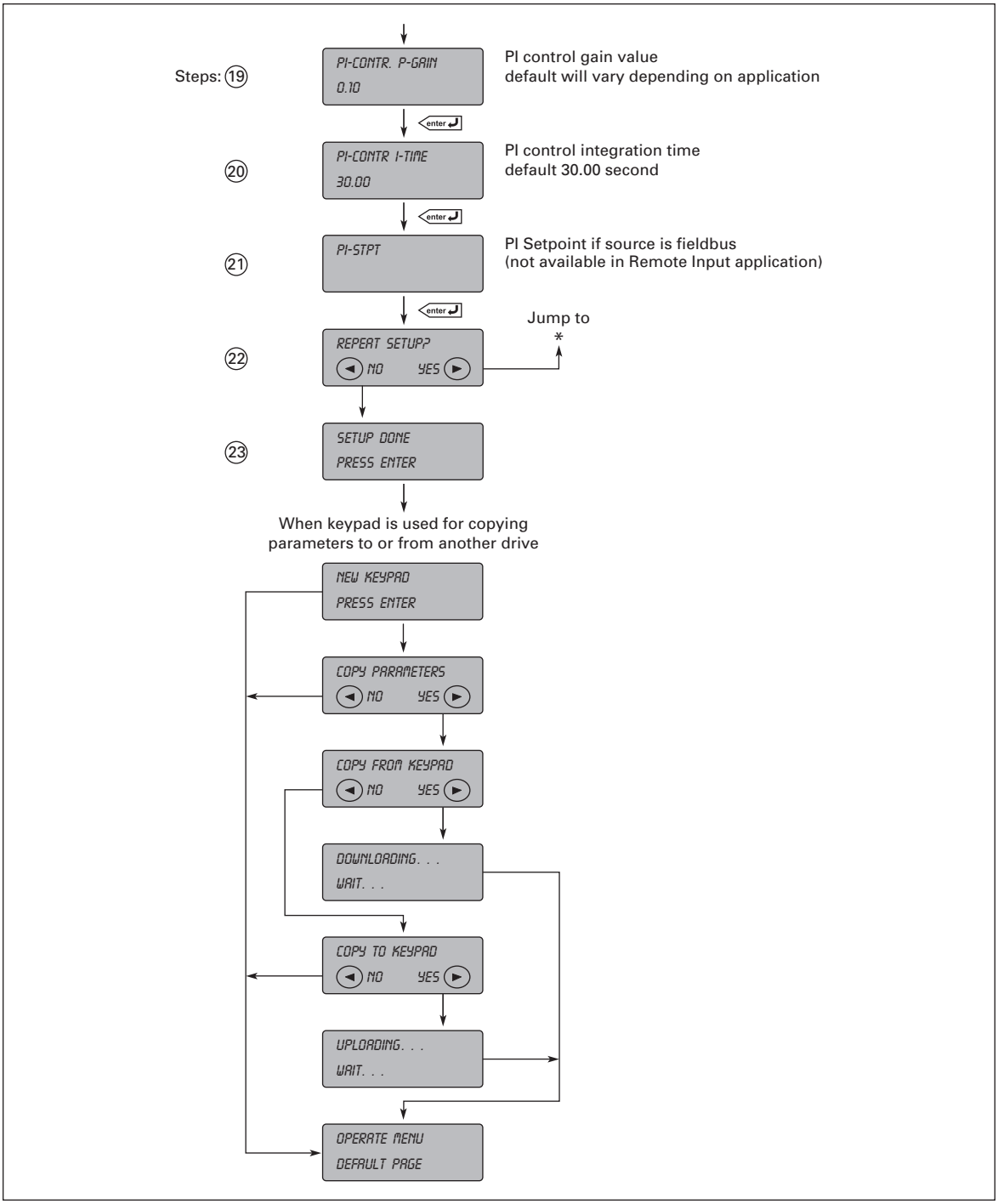

Figure 7-3: Start-Up Wizard Navigation (3 of 3)

Note: Start-Up Wizard can be cancelled with the STOP/RESET button. If pressed, the text "EXIT?" is shown on the display along with "No" and "Yes".

Note: In Pressure Control application, inverse selection is an option.

Start-Up Wizard — Remote Input Application

The Remote Input application uses a slightly different Start-Up Wizard:

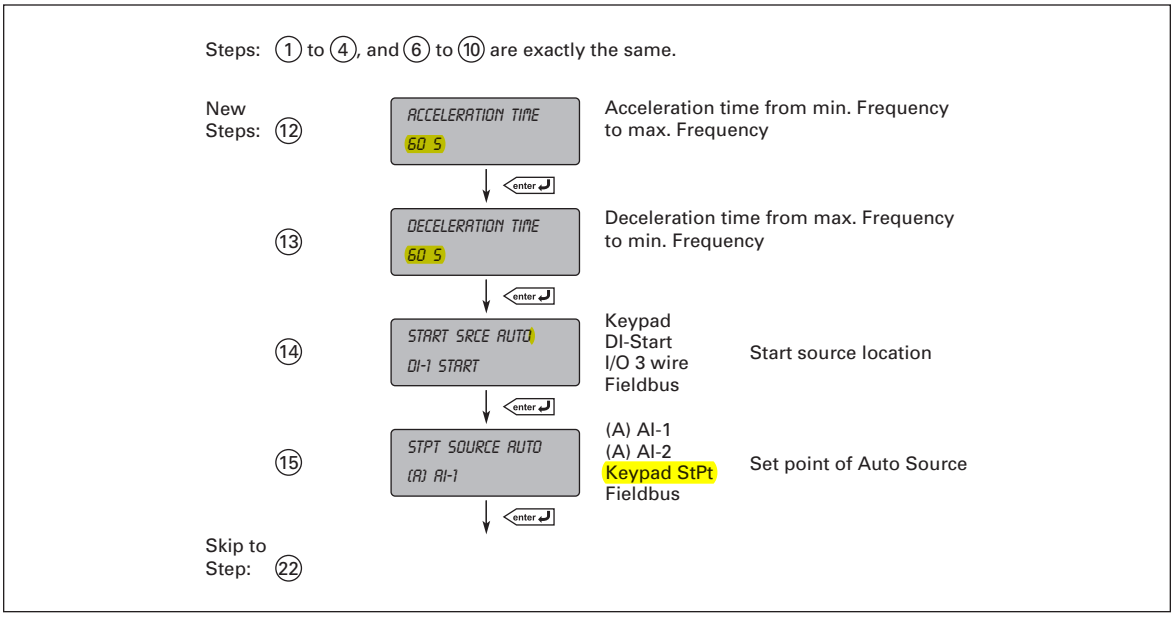

Figure 7-4: Remote Input Start-Up Wizard

November 2009

Chapter 8 — N2, XT, and SA BUS Communication

The Johnson Controls VSD Series Drives powered by Cutler-Hammer® technology from Eaton's electrical business can be controlled, monitored and programmed from a host system via Johnson Controls N2, XT, or SA BUS communication protocols with the addition of the VS-OPTNX RS-485 Communication Option Board.

If you purchase your Communication Board separate from the drive, please note that it must be installed in slot D or E on the control board of the VSD Series drive.

Chapter 9 — Remote Input Application (SVCHS200)

Introduction

The Remote Input Application is typically used for direct frequency control without the PI. In these applications, the Remote Input Application provides a smooth control and an integrated measurement and control package where no additional components are needed.

The direct frequency reference is used for the control without the PI controller and is selected from the analog inputs, fieldbus or keypad.

- Digital inputs DI-2, DI-3, DI-4, DI-5 and DI-6 and all outputs are freely programmable.

Additional functions:

- Analog input signal range selection
- Fire Mode
- Torque limit supervision
- Reference limit supervision
- Two sets of ramp times and S-shape ramp programming
- Programmable start and stop functions
- DC Brake Chopper
- Six skip frequency areas
- Programmable V/Hz curve and switching frequency
- Auto restart
- Motor thermal and stall protection: Programmable action; off, warning, fault
- Motor underload protection
- Input phase supervision

Details of the parameters shown in this section are available in **Chapter 15** of this Manual, listed by parameter ID number.

Control Input/Output

Table 9-1: Remote Input Application Default I/O Configuration

	Terminal		Signal	Description
	OPTA9			
	1	+10V DC_{ref}	Reference output	Voltage for potentiometer, etc.
0 to 10V DC (Factory Default)	2	AI-1+	Analog input, voltage range 0 – 10V DC	Voltage input frequency setpoint
	3	AI-1-	I/O Ground	Ground for reference and controls
4 to 20 mA (Factory Default)	4	AI-2+	Analog input, current range 0 – 20 mA	Current input frequency setpoint
	5	AI-2-		
	6	24V DC	Control voltage output	Voltage for switches, etc. max 0.1A
	7	GND	I/O ground	Ground for reference and controls
External Interlock Wiring	8	DI-1	Start/Stop Control	Contact closed = start
	9	DI-2	External fault input (programmable)	Contact closed = fault Contact open = no fault
	10	DI-3	External Interlock (programmable)	Contact closed = OK Open = Interlocked
	11	CMA	Common for DI-1 – DI-3	Connect to GND or 24V DC
	12	24V DC	Control voltage output	Voltage for switches (see terminal 6)
	13	GND	I/O ground	Ground for reference and controls
External Interlock Wiring	14	DI-4	Speed Select 1 (programmable)	Contact closed = Speed Select 1
	15	DI-5	Fire Mode (programmable)	Contact closed = Fire Mode active
	16	DI-6	Overload relay (IntelliPass) (programmable)	Contact open = no fault Contact closed = fault
	17	CMB	Common for DI-4 – DI-6	Connect to GND or 24V DC
0 to 20 mA (Factory Default)	18	AO-1+	Output frequency Analog output	Programmable Range 0 – 20 mA, R_L max. 500W
	19	AO-1		
	20	DO-1	Digital output READY	Programmable Open collector, I ≤ 50 mA, V ≤ 48V DC
Defaults:	**OPTA2**			
21-22 Opens on RUN	21	RO-1	Relay output 1	Programmable Drive RUN is default.
22-23 Closes on RUN	22	RO-1		
	23	RO-1		
24-25 Opens on FAULT	24	RO-2	Relay output 2	Programmable Drive FAULT is default.
25-26 Closes on FAULT	25	RO-2		
	26	RO-2		

Note: For more information on jumper selections, see **Chapter 4**.

X3 Jumper Setting — CMA and CMB Grounding

CMB Connected to Ground
CMA Connected to Ground

CMB Isolated from Ground
CMA Isolated from Ground

CMB and CMA Internally Connected and Isolated from Ground

CAUTION

Unattended start will occur if power is supplied with Start Command activated.

Parameter Lists

On the next pages you will find the lists of parameters within the respective parameter groups. The parameter descriptions are given by ID number in **Chapter 15**.

Column explanations:

Code	=	Location indication on the keypad; Shows the operator the present parameter number
Parameter	=	Name of parameter
Min.	=	Minimum value of parameter
Max.	=	Maximum value of parameter
Unit	=	Unit of parameter value; Given if available
Default	=	Value preset by factory
ID	=	ID number of the parameter for reference to **Chapter 15**

Quick Setup Parameters — M1 → G1.1

Table 9-2: Quick Setup Parameters — M1 → G1.1

Code	Parameter	Min.	Max.	Unit	Default	ID Number	Description
P1.1.1	Min Frequency	0.00	Max_ Frequency	Hz	12.00	101	Minimum output frequency, f[Hz].
P1.1.2	Max Frequency	FreqMin	320.00	Hz	60.00	102	Maximum output frequency, f[Hz].
P1.1.3	Acceleration Time	0.1	3000.0	s	60.0	103	Time from minimum frequency to maximum frequency.
P1.1.4	Deceleration Time	0.1	3000.0	s	60.0	104	Time from maximum frequency to minimum frequency.
P1.1.5	Motor NP Voltg	180	Motor VoltageMax	V	400	105	Motor nameplate voltage in Volts.
P1.1.6	Motor NP Freq	8.00	320.00	Hz	60.00	106	Motor nameplate frequency in Hertz.
P1.1.7	Motor Nom Speed	24	20000	rpm	1720	111	Motor nameplate speed in Rpm.
P1.1.8	Motor Nom Currnt	Motor CurrentMin	Motor CurrentMax	A	5.40	108	Motor nameplate current, I[A]
P1.1.9	Power Factor	0.30	1.00		0.85	109	Motor power factor. (Cos Phii)
P1.1.10	Service Factor	0.10	2.00		1.00	110	Motor service factor. This will calculate the motor current limit. (MotorNomCurrent x Service Factor)
P1.1.11	Current Limit	Motor CurrentMin	Motor CurrentMax	A	7.00	107	Output current limit of the unit in Amps.

Table 9-2: Quick Setup Parameters — M1 → G1.1, continued

Code	Parameter	Min.	Max.	Unit	Default	ID Number	Description
P1.1.12	Start Srce Hand	1	3		1	112	Parameter for Local Start/Stop/Reverse control location. Default = Keypad **1** = Keypad **2** = DI-1 Start **3** = I/O Three Wire
P1.1.13	StPt Source Hand	0	3		2	113	Local speed setpoint selection: **0** = analog input AI-1 **1** = analog input AI-2 **2** = Speed Setpoint from Keypad **3** = Motor Potentiometer
P1.1.14	Start Srce Auto	1	4		2	114	Parameter for Remote Start/ Stop/Reverse control location. Default = DI-1 Start **1** = Keypad **2** = DI-1 Start **3** = I/O Three Wire **4** = Fieldbus
P1.1.15	StPt Source Auto	0	4		0	115	Remote speed setpoint selection: **0** = analog input AI-1 **1** = analog input AI-2 **2** = Speed Setpoint from Keypad **3** = Motor Potentiometer **4** = Speed Setpoint from Fieldbus

Input Signals — M1 → G1.2

Table 9-3: Input Signals — M1 → G1.2

Code	Parameter	Min.	Max.	Unit	Default	ID Number	Description
P1.2.1	Start Mode (A) DI-1 Funct.	0	3		1	201	Start Function: **0** = Normal start without interlockings. **1** = Interlocked start. One of the digital inputs must be programmed to Intlk/RunEna. DI-3 is defaulted for this feature. **2** = Mode 1 + timeout supervision. If the interlock is not OK within the interlock timeout time, start request is ignored and must be given again. **3** = Delayed start. Start request is given after delay time has expired.
P1.2.2	Intlk Stop Mode	0	1		1	216	**0** = Coasting **1** = Ramp
P1.2.3	Intlk Timeout	0.00	300.00	s	5.00	202	Interlock timeout time for Start Function #2. Default = 5s.
P1.2.4	Start Delay Time	0.00	300.00	s	5.00	203	Start delay time for Start Function #3. Default = 5s.
P1.2.5	(A) DI-2 Funct.	0	17		1	204	Default #1 External Fault Close **0** = Stop pulse, when 3-wire start/stop logic is selected. (False=Stop, True=Ready to Run) **1** = Ext. fault, closing contact **2** = External fault, opening contact **3** = Fault reset **4** = Run enable-Closed Contact **5** = Force ctrl. place to Hand **6** = Force ctrl. place to Auto **7** = Reverse **8** = Speed Select 1 **9** = Fire Mode-Closed Contact **10** = Speed Select 2 **11** = Speed Select 3 **12** = Force Bypass **13** = External interlock closed **14** = External interlock open **15** = Mot. Pot. UP **16** = Mot. Pot. DOWN **17** = Fire Mode-Open Contact

⚠ CAUTION

Unattended start will occur if power is supplied with Start Command activated.

Table 9-3: Input Signals — M1 → G1.2, continued

Code	Parameter	Min.	Max.	Unit	Default	ID Number	Description
P1.2.6	(A) DI-3 Funct.	0	17		13	205	Default #13 Interlock/Run Enable **0** = Not Used **1** = Ext. fault, closing contact **2** = External fault, opening contact **3** = Fault reset **4** = Run enable-Closed Contact **5** = Force ctrl. place to Hand **6** = Force ctrl. place to Auto **7** = Reverse **8** = Speed Select 1 **9** = Fire Mode-Closed Contact **10** = Speed Select 2 **11** = Speed Select 3 **12** = Force Bypass **13** = External interlock closed **14** = External interlock open **15** = Mot. Pot. UP **16** = Mot. Pot. DOWN **17** = Fire Mode-Open Contact
P1.2.7	(A) DI-4 Funct.	0	17		8	206	Default #8 Speed Select 1 **0** = Not Used **1** = Ext. fault, closing contact **2** = External fault, opening contact **3** = Fault reset **4** = Run enable-Closed Contact **5** = Force ctrl. place to Hand **6** = Force ctrl. place to Auto **7** = Reverse **8** = Speed Select 1 **9** = Fire Mode-Closed Contact **10** = Speed Select 2 **11** = Speed Select 3 **12** = Force Bypass **13** = External interlock closed **14** = External interlock open **15** = Mot. Pot. UP **16** = Mot. Pot. DOWN **17** = Fire Mode-Open Contact

Table 9-3: Input Signals — M1 → G1.2, continued

Code	Parameter	Min.	Max.	Unit	Default	ID Number	Description
P1.2.8	(A) DI-5 Funct.	0	17		9	207	Default #9 Fire-Mode **0** = Not Used **1** = Ext. fault, closing contact **2** = External fault, opening contact **3** = Fault reset **4** = Run enable-Closed Contact **5** = Force ctrl. place to Hand **6** = Force ctrl. place to Auto **7** = Reverse **8** = Speed Select 1 **9** = Fire Mode-Closed Contact **10** = Speed Select 2 **11** = Speed Select 3 **12** = Force Bypass **13** = External interlock closed **14** = External interlock open **15** = Mot. Pot. UP **16** = Mot. Pot. DOWN **17** = Fire Mode-Open Contact
P1.2.9	(A) DI-6 Funct.	0	17		0	208	Default #0 Overload Fault Relay-input **0** = Overload Fault Relay input. (Used in Intellipass) **1** = Ext. fault, closing contact **2** = External fault, opening contact **3** = Fault reset **4** = Run enable-Closed Contact **5** = Force ctrl. place to Hand **6** = Force ctrl. place to Auto **7** = Reverse **8** = Speed Select 1 **9** = Fire Mode-Closed Contact **10** = Speed Select 2 **11** = Speed Select 3 **12** = Force Bypass **13** = External interlock closed **14** = External interlock open **15** = Mot. Pot. UP **16** = Mot. Pot. DOWN **17** = Fire Mode-Open Contact
P1.2.10	(A) AI-1 Invert	0	1		0	209	**0** = Not inverted **1** = Inverted
P1.2.11	(A) AI-1 Filter	0.00	10.00	s	0.10	210	**0** = No filtering
P1.2.12	(A) AI-2 Range	0	1		1	211	Default =1 (4-20mA) (0 – 100%) **0** = 0 - 20 mA **1** = 4 - 20 mA
P1.2.13	(A) AI-2 Invert	0	1		0	212	**0** = Not inverted **1** = Inverted
P1.2.14	(A) AI-2 Filter	0.00	10.00	s	0.10	213	**0** = No filtering
P1.2.15	StPt. Scale Min	0.0	100.0	%	0.0	214	Speed that corresponds to the minimum setpoint signal.

Table 9-3: Input Signals — M1 → G1.2, continued

Code	Parameter	Min.	Max.	Unit	Default	ID Number	Description
P1.2.16	StPt. Scale Max	0.0	100.0	%	0.0	215	Speed that corresponds to the maximum setpoint signal. 0.0%=NOT IN USE!
P1.2.17	MotPotStPt Memory	0	1		0	221	Parameter to select reset function for motor potentiometer speed setpoint. Default: No reset.

Output Signals — M1 → G1.3

Table 9-4: Output Signals — M1 → G1.3

Code	Parameter	Min.	Max.	Unit	Default	ID Number	Description
P1.3.1	(A) AO-1 Funct.	0	8		1	301	Analog output function: **0** = Fieldbus controlled **1** = O/P frequency (0 - f max) **2** = Reference frequency (0 - f max) **3** = Motor speed (0 - 100% x Motor nom. speed) **4** = O/P current (0 - 100% x I nMot) **5** = Motor torque (0 - 100% x T nMot) **6** = Motor power (0 - 100% x P nMot) **7** = Motor voltage (0 - 100% x U nMot) **8** = DC-Bus Voltage (0 - 100% x U nMot)
P1.3.2	(A) AO-1 Filter	0.00	10.00	s	1.00	302	
P1.3.3	(A) AO-1 Invert	0	1		0	303	**0** = Not inverted **1** = Inverted
P1.3.4	(A) AO-1 Min.	0	1		0	304	**0** = 0 mA **1** = 4 mA
P1.3.5	(A) AO-1 Scale	10	1000	%	100	305	

Table 9-4: Output Signals — M1 → G1.3, continued

Code	Parameter	Min.	Max.	Unit	Default	ID Number	Description
P1.3.6	(A) DO-1 Funct.	0	26		1	306	Default=Drive Ready **0** = Not used **1** = Drive Ready **2** = Drive Running **3** = General Fault **4** = General Fault inverted **5** = Drive overheat warning **6** = External fault or warning **7** = Reference (4mA) fault or warning **8** = General Warning **9** = Drive Reversing **10** = Preset Speed Active **11** = Speed setpoint=Actual Speed (=At speed) **12** = Motor regulator activated **13** = Actual Speed limit supervision **14** = Speed Setpoint limit supervision **15** = Torque limit supervision **16** = Timer On/Timer Off output control (Trigger is run request) **17** = Selections #16 inverted **18** = Frequency converter temperature limit supervision **19** = Unrequested rotation direction **20** = Thermistor fault / warning **21** = Hand Control Active **22** = Auto Control Active **23** = DI-Fire Mode Active **24** = Relay to energize an external element before starting the drive. **25** = Fieldbus Passthrough **26** = Bypass Run
P1.3.7	(B) RO-1 Funct.	0	25		2	307	Same as parameter 1.3.6.
P1.3.8	(B) RO-2 Funct.	0	25		3	308	Same as parameter 1.3.6
P1.3.9	(D) RO-1 Funct.	0	25		0	309	Same as parameter 1.3.6
P1.3.10	(D) RO-2 Funct.	0	25		0	310	Same as parameter 1.3.6
P1.3.11	(D) RO-3 Funct.	0	25		0	311	Same as parameter 1.3.6
P1.3.12	Sp.StPt Supv Fct	0	2		0	312	Speed Setpoint Supervision Function: **0** = Not used **1** = Low limit **2** = High limit
P1.3.13	Sp.StPt Supv Lim	0.0	100.0	%	0.0	313	Speed Setpoint Supervision Value.

Table 9-4: Output Signals — M1 → G1.3, continued

Code	Parameter	Min.	Max.	Unit	Default	ID Number	Description
P1.3.14	Act.Sp. Supv Fct	0	2		0	314	Actual Speed Supervision Function: **0** = Not used **1** = Low limit **2** = High limit
P1.3.15	Act.Sp. Supv Lim	0.0	100.0	%	0.0	315	Actual Speed Supervision Value. (±1.0% hysteresis)
P1.3.16	Torque Supv Fct	0	2		0	316	Torque Limit Supervision Function: **0** = Not used **1** = Low limit **2** = High limit
P1.3.17	Torque Supv Lim	0.0	300.0	%	0.0	317	Torque Limit Supervision Value
P1.3.18	TempLim Supv Fct	0	2		0	318	Temperature Limit Supervision Function: **0** = Not used **1** = Low limit **2** = High limit
P1.3.19	TempLim Supv Lim	-50	170	°F	104	319	Temperature Limit Supervision value
P1.3.20	StartRlyON-Del.	0.0	100.0	s	0.0	320	Relay/Digital output ON-delay time after start-command is given.
P1.3.21	StartRlyOFF-Del.	0.0	100.0	s	0.0	321	Relay/Digital output OFF-delay time after stop-command is given.

Drive Control Parameters — M1 → G1.4

Table 9-5: Drive Control Parameters — M1 → G1.4

Code	Parameter	Min.	Max.	Unit	Default	ID Number	Description
P1.4.1	Start Mode	0	1		0	401	**0** = Ramp **1** = Flying start
P1.4.2	Stop Mode	0	1		1	402	**0** = Coasting **1** = Ramp
P1.4.3	Brake Chopper	0	4		0	403	Brake Chopper Mode Selection. **0** = Brake NO, Test NO **1** = Brake YES(Run), Test YES (Ready+run) **2** = Brake chopper EXTERNAL, Test NO **3** = Brake YES(Ready+run), Test YES (Ready+run) **4** = Brake YES(Run), Test NO
P1.4.4	S-curve Time	0.0	10.0	s	0.0	404	Smooth ratio for S-curve

Prohibit Frequencies— M1 → G1.5

Table 9-6: Prohibit Frequencies — M1 → G1.5

Code	Parameter	Min.	Max.	Unit	Default	ID Number	Description
P1.5.1	SkipF1 Low Lim	0.0	100.0	%	0.0	501	Prohibit speed range 1 low limit.
P1.5.2	SkipF1 High Lim	Range_1_ Low_Lim	100.0	%	0.0	502	Prohibit speed range 1 high limit: **0** = No prohibit frequency range
P1.5.3	SkipF2 Low Lim	0.0	100.0	%	0.0	503	Prohibit speed range 2 low limit
P1.5.4	SkipF2 High Lim	Range_2_ Low_Lim	100.0	%	0.0	504	Prohibit speed range 2 high limit: **0** = No prohibit frequency range
P1.5.5	SkipF3 Low Lim	0.0	100.0	%	0.0	505	Prohibit speed range 3 low limit
P1.5.6	SkipF3 High Lim	Range_3_ Low_Lim	100.0	%	0.0	506	Prohibit speed range 3 high limit: **0** = No prohibit frequency range
P1.5.7	SkipF4 Low Lim	0.0	100.0	%	0.0	507	Prohibit speed range 4 low limit
P1.5.8	SkipF4 High Lim	Range_4_ Low_Lim	100.0	%	0.0	508	Prohibit speed range 4 high limit: **0** = No prohibit frequency range
P1.5.9	SkipF5 Low Lim	0.0	100.0	%	0.0	509	Prohibit speed range 5 low limit
P1.5.10	SkipF5 High Lim	Range_5_ Low_Lim	100.0	%	0.0	510	Prohibit speed range 5 high limit: **0** = No prohibit frequency range
P1.5.11	SkipF6 Low Lim	0.0	100.0	%	0.0	511	Prohibit speed range 6 low limit
P1.5.12	SkipF6 High Lim	Range_6_ Low_Lim	100.0	%	0.0	512	Prohibit speed range 6 high limit: **0** = No prohibit frequency range
P1.5.13	PH Acc/Dec Ramp	0.1	10.0	x	1.0	513	Acceleration/Deceleration time factor to pass prohibit speed window.

Motor Control Parameters — M1 → G1.6

Table 9-7: Motor Control Parameters — M1 → G1.6

Code	Parameter	Min.	Max.	Unit	Default	ID Number	Description
P1.6.1	Motor Ctrl Mode	0	1		0	601	Motor control mode: **0** = frequency control **1** = speed control
P1.6.2	V/Hz Optim.	0	1		0	602	V/F optimization selection: **0** = none **1** = automatic torque boost
P1.6.3	V/Hz Ratio	0	3		0	603	V/F ratio selection: **0** = linear **1** = squared **2** = programmable **3** = Linear with flux optim.
P1.6.4	Field WeakngPnt	8.00	320.00	Hz	60.00	604	Field weakening point.
P1.6.5	Voltage at FWP	10.00	200.00	%	100.00	605	Motor voltage (%*MotorNPVoltage) at field weakening point.
P1.6.6	V/Hz Mid Freq	0.00	Field Weakening Point	Hz	60.00	606	Programmable V/Hz curve middle point frequency.
P1.6.7	V/Hz Mid Voltg	0.00	100.00	%	100.00	607	Motor voltage (%*MotorNPVoltage) at programmable V/Hz curve middle point.
P1.6.8	Zero Freq Voltg	0.00	40.00	%	0.00	608	Motor voltage (%*MotorNPVoltage) at zero speed.
P1.6.9	Switching Freq	1.0	Switching FreqMax	kHz	3.6	609	Switching frequency in kHz. See **Appendix A**, **Table A-1**.
P1.6.10	Overvolt Contr	0	2		1	610	**0** = Off **1** = On with no ramping **2** = On with ramping
P1.6.11	Undervolt Contr	0	1		1	611	**0** = Off **1** = On
P1.6.12	Identification	0	2		0	612	Identification run. When this parameter is set greater than zero, then start command must be given within 20 seconds.

Protections — M1 → G1.7

Table 9-8: Protections — M1 → G1.7

Code	Parameter	Min.	Max.	Unit	Default	ID Number	Description
P1.7.1	Input Phase Supv	0	2		2	701	Response to input phase supervision. **0** = No Action **1** = Warning **2** = Fault
P1.7.2	4mA Fault Resp	0	2		0	702	Response to 4 mA signal supervision. **0** = No Action **1** = Warning **2** = Fault
P1.7.3	Ext. Fault Resp	0	2		2	703	Response to external fault digital input signal supervision. **0** = No Action **1** = Warning **2** = Fault
P1.7.4	FBComm. FaultResp	0	2		0	704	Response to fieldbus communication supervision. **0** = No Action **1** = Warning **2** = Fault
P1.7.5	SlotComFault Resp	0	2		0	705	Response to slot communication supervision. **0** = No Action **1** = Warning **2** = Fault
P1.7.6	Motor Therm Prot	0	3		0	707	**0** = No response **1** = Warning **2** = Fault, stop mode after fault according to ID402 **3** = Fault, stop mode after fault always by coasting
P1.7.7	MotAmbTemp Factor	-100.0	100.0	%	0.0	708	Percent of ambient temperature.
P1.7.8	MTP f0 Current	0.0	150.00	%	40.0	709	Percent of motor nameplate current.
P1.7.9	MTP Motor T	1	200	min	45	710	Time to reach 63% of final value.
P1.7.10	Motor Duty Cycle	0	100	%	100	711	Percent of nominal motor load.
P1.7.11	Stall Protection	0	3		0	712	**0** = No response **1** = Warning **2** = Fault, stop mode after fault according to ID402 **3** = Fault, stop mode after fault always by coasting
P1.7.12	Stall Current	0.00	Motor CurrentMax	A	1.00	713	
P1.7.13	Stall Time Lim	1.00	120.00	s	15.00	714	
P1.7.14	Stall Freq Lim	1.00	Max_Freq	Hz	25.00	715	

Tables 9-8: Protections — M1 → G1.7, continued

Code	Parameter	Min.	Max.	Unit	Default	ID Number	Description
P1.7.15	Underload Protection	0	3		0	716	**0** = No response **1** = Warning **2** = Fault, stop mode after fault according to ID402 **3** = Fault, stop mode after fault always by coasting
P1.7.16	UP fnom Torque	10.0	150.00	%	50.0	717	Minimum torque allowed when above FWP.
P1.7.17	UP f0 Torque	5.0	150.00	%	10.0	718	Minimum torque allowed with zero frequency.
P1.7.18	UP Time Limit	2.00	600.00	s	20.00	719	
P1.7.19	Autom. Restart	0	3		0	706	Resets faults. See **Page 15-20**. **0** = Disabled **1** = Automatically transferred to Bypass **2** = Reset drive only **3** = Reset drive, if fails, transferred to Bypass
P1.7.20	Fire Mode Speed	0	100.0	%	100	804	When fire mode input is triggered, drive will run at fire mode speed.

Fieldbus Parameters — M1 → G1.8

Table 9-9: Fieldbus Parameters — M1 → G1.8

Code	Parameter	Min.	Max.	Unit	Default	ID Number	Description
P1.8.1	FB Data Out1 Sel	0	10000		1 ①	1001	Fieldbus process data output 1 selection. Default = Actual Speed
P1.8.2	FB Data Out2 Sel	0	10000		5 ①	1002	Fieldbus process data output 2 selection. Default = Motor Current
P1.8.3	FB Data Out3 Sel	0	10000		8 ①	1003	Fieldbus process data output 3 selection. Default = Motor Voltage
P1.8.4	FB Data Out4 Sel	0	10000		7 ①	1004	Fieldbus process data output 4 selection. Default = Motor Power
P1.8.5	FB Data Out5 Sel	0	10000		9 ①	1005	Fieldbus process data output 5 selection. Default = DC-Link Voltage

① ID number of parameter or variable to be sent over fieldbus. ID 1 – 20 are Monitoring values, Menu 7 (M7). See **Table 9-12**.

Table 9-9: Fieldbus Parameters — M1 → G1.8, continued

Code	Parameter	Min.	Max.	Unit	Default	ID Number	Description
P1.8.6	FB Data Out6 Sel	0	10000		20 ①	1006	Fieldbus process data output 6 selection. Default = Application Status Word (Variable:ApplStatusWord) **b0** = Drive Ready **b1** = Run Enable **b2** = Drive Running **b3** = Drive Reversing **b4** = General Fault **b5** = General Warning **b6** = Preset Speed Active **b7** = Motor Requlator active **b8** = Output speed supervision indication **b9** = Setpoint speed supervision indication **b10** = HAND Control indication **b11** = AUTO Control indication **b12** = D-IN Firemode **b13** = Damper control signal **b14** = Bypass mode status indication **b15** = Bypass running
P1.8.7	FB Data Out7 Sel	0	10000		18 ①	1007	Fieldbus process data output 7 selection. Default = Active Fault Code
P1.8.8	FB Data Out8 Sel	0	10000		19 ①	1008	Fieldbus process data output 8 selection. Default = Active Warning Code

① ID number of parameter or variable to be sent over fieldbus. ID 1 – 20 are Monitoring values, Menu 7 (M7). See **Table 9-12**.

Preset Speeds — M1 → G1.10

Table 9-10: Preset Speeds — M1 → G1.10

Code	Parameter	Min.	Max.	Unit	Step	Default	ID Number	Description
P1.10.1	Preset Speed 1	0	100.0	%	0.1	30.0	1701	Preset speeds when Digital Inputs are programmed
P1.10.2	Preset Speed 2	0	100.0	%	0.1	40.0	1702	
P1.10.3	Preset Speed 3	0	100.0	%	0.1	50.0	1703	
P1.10.4	Preset Speed 4	0	100.0	%	0.1	60.0	1704	
P1.10.5	Preset Speed 5	0	100.0	%	0.1	70.0	1705	
P1.10.6	Preset Speed 6	0	100.0	%	0.1	80.0	1706	
P1.10.7	Preset Speed 7	0	100.0	%	0.1	90.0	1707	

Keypad Control Parameters — M2

This menu provides the parameters for the setting of the keypad speed setpoint, the selection of motor direction when in keypad operation, and when the STOP button is active.

Table 9-11: Keypad Control Parameters — M2

Code	Parameter	Min.	Max.	Unit	Default	ID Number ①	Description
R2.1	Speed Setpoint	0.0	100.0	%	0.0		Keypad Speed Setpoint.
P2.2	Keypad Direction	0	1		0	1009	Reverse request active from the panel **0** = Forward **1** = Reverse
P2.3	StopButton Active	0	1		1	1110	Stop button (Keypad) always active (Yes/No)

① Keypad Control Parameter ID Numbers are listed separately on **Page 15-28**.

Menus — M3 to M6

Menus M3 to M6 provide information on the Active Faults, Fault History, System Menu settings and the Expander Board setup. These menu items are explained in detail in **Chapter 6**.

Monitoring Menu — M7

The monitored items are the actual values of parameters and signals as well as the status and measurements of other elements. Monitored items cannot be edited.

See **Chapter 6** — Menu information item M7, for more information.

Table 9-12: Monitoring Menu

Code	Parameter	Min.	Max.	Unit	Default	ID Number	Description
V7.1	Output Frequency	-320.00	320.00	Hz	0.00	2	Output frequency to the motor
V7.2	Actual Speed	-320.0	320.0	%	0.0	1	Output speed to the motor
V7.3	Speed Setpoint	-320.0	320.0	%	0.0	3	Monitored speed setpoint. This will show also the speed setpoint below the minimum frequency.
V7.4	Motor Speed	-10000	10000	rpm	0	4	Calculated motor speed in rpm
V7.5	Motor Current	0.0	Motor CurrentMax	A	0.0	5	
V7.6	Motor Torque	-300.0	300.0	%	0.0	6	[R] Motor torque as % value, +1000 equals +100.0 % pos = clockwise, neg = counterclockwise
V7.7	Motor Power	-300.0	300.0	%	0.0	7	
V7.8	Motor Voltage	0.0	1000.0	V	0.0	8	Measured motor voltage
V7.9	DC-Bus Voltage	0	1000	V	0	9	[R] DC voltage in Volts Tfilt = 32ms.
V7.10	Unit Temperature	-120	570	°F	0	10	Temperature of the heat sink

Table 9-12: Monitoring Menu, continued

Code	Parameter	Min.	Max.	Unit	Default	ID Number	Description
V7.11	Motor Temperature	0.0	1000.0	%	0.0	11	
V7.12	(A) AI-1	-10.00	20.00	V	0.00	12	Voltage Input value [V]
V7.13	(A) AI-2	-10.00	20.00	mA	0.00	13	Current Input value [mA]
V7.14	DI-1 DI-2 DI-3	0	7		0	14	DIA-1, DIA-2 and DIA-3 status
V7.15	DI-4 DI-5 DI-6	0	7		0	15	DIB-4, DIB-5 and DIB-6 status
V7.16	DO-1 RO-1 RO-2	0	7		0	16	DO-1, RO-1 and RO-2 status
V7.17	(A) AO-1	0.00	20.00	mA	0.00	17	
V7.18	ActFaultCode	0	200		0	18	Active Fault code.
V7.19	ActWarnCode	0	200		0	19	Active Warning code.
V7.20	Status Word	-32768	32767		0	20	**b0** = Drive Ready **b1** = Run Enable **b2** = Drive Running **b3** = Drive Reversing **b4** = General Fault **b5** = General Warning **b6** = Preset Speed Active **b7** = Motor Regulator active **b8** = Output speed supervision indication **b9** = Setpoint speed supervision indication **b10** = HAND Control indication **b11** = AUTO Control indication **b12** = D-IN Firemode **b13** = Damper control signal **b14** = Bypass mode status indication **b15** = Bypass running
G7.21	RO-1 RO-2 RO-3	0	7		0	21	Monitoring the OPTB5 relay outputs.
G7.22	Multimonitor	—	—		—	—	Displays three monitor values simultaneously

Operate Menu — M8

The Operate Menu provides an easy to use method of viewing key numerical Monitoring Menu items. It also allows the setting of the keypad frequency reference. See **Chapter 6** for more information.

Chapter 10 — Generic PI Application (SVCHS201)

Introduction

The Generic PI Application is typically used to control levels of pumps and fans with a pressure transducer.

The direct frequency reference can be used for the control without the PI controller and is selected from the analog inputs, fieldbus, motor potentiometer or keypad.

The Generic PI Application is typically used to control levels or pumps and fans. In these applications, the Generic PI Application provides a smooth control and an integrated measurement and control package where no additional components are needed.

- Digital inputs DI-2, DI-3 and DI-5 and all outputs are freely programmable.

Additional functions:

- Analog input signal range selection
- One frequency limit supervision
- Torque limit supervision
- Speed setpoint limit supervision
- Programmable start and stop functions
- DC Brake Chopper
- Six skip frequency areas
- Programmable V/Hz curve and switching frequency
- Auto restart
- Motor thermal and stall protection: Programmable action; off, warning, fault
- Motor underload protection
- Input and output phase supervision

Details of the parameters shown in this section are available in **Chapter 15** of this Manual, listed by parameter ID number.

Control Input/Output

Table 10-1: Generic PI Application Default I/O Configuration

	Terminal		Signal	Description
	OPTA9			
	1	+10V DC_{ref}	Reference output	Voltage for potentiometer, etc.
0 to 10V DC (Factory Default)	2	AI-1+	Analog input, voltage range 0 – 10V DC	Voltage input for PI setpoint or feedback (Programmable)
	3	AI-1-	I/O Ground	Ground for reference and controls
4 to 20 mA (Factory Default)	4	AI-2+	Analog input, current range 0 – 20 mA	Current input for PI setpoint or feedback (Programmable)
	5	AI-2-		
	6	24V DC	Control voltage output	Voltage for switches, etc. max 0.1A
	7	GND	I/O ground	Ground for reference and controls
External Interlock Wiring	8	DI-1	Start/Stop Control	Contact closed = start
	9	DI-2	External fault input (programmable)	Contact closed = fault Contact open = no fault
	10	DI-3	External Interlock (programmable)	Contact closed = OK Open = Interlocked
	11	CMA	Common for DI-1 – DI-3	Connect to GND or 24V DC
	12	24V DC	Control voltage output	Voltage for switches (see terminal 6)
	13	GND	I/O ground	Ground for reference and controls
External Interlock Wiring	14	DI-4	Speed Select 1 (programmable)	Contact closed = Speed Select 1
	15	DI-5	Fire Mode (programmable)	Contact closed = Fire Mode active
	16	DI-6	Overload relay (IntelliPass) (programmable)	Contact open = no fault Contact closed = fault
	17	CMB	Common for DI-4 – DI-6	Connect to GND or 24V DC
0 to 20 mA (Factory Default)	18	AO-1+	Output frequency Analog output	Programmable Range 0 – 20 mA, R_L max. 500W
	19	AO-1		
	20	DO-1	Digital output READY	Programmable Open collector, I ≤ 50 mA, V ≤ 48V DC
Defaults:	**OPTA2**			
21-22 Opens on RUN	21	RO-1	Relay output 1	Programmable Drive RUN is default.
22-23 Closes on RUN	22	RO-1		
	23	RO-1		
24-25 Opens on FAULT	24	RO-2	Relay output 2	Programmable Drive FAULT is default.
25-26 Closes on FAULT	25	RO-2		
	26	RO-2		

Note: For more information on jumper selections, see **Chapter 4**.

X3 Jumper Setting — CMA and CMB Grounding

CMB Connected to Ground
CMA Connected to Ground

CMB Isolated from Ground
CMA Isolated from Ground

CMB and CMA Internally Connected and Isolated from Ground

CAUTION

Unattended start will occur if power is supplied with Start Command activated.

Parameter Lists

On the next pages you will find the lists of parameters within the respective parameter groups. The parameter descriptions are given by ID number in **Chapter 15**.

Column explanations:

Code	=	Location indication on the keypad; Shows the operator the present parameter number
Parameter	=	Name of parameter
Min.	=	Minimum value of parameter
Max.	=	Maximum value of parameter
Unit	=	Unit of parameter value; Given if available
Default	=	Value preset by factory
ID	=	ID number of the parameter for reference to **Chapter 15**

Quick Setup Parameters — M1 → G1.1

Table 10-2: Quick Setup Parameters — M1 → G1.1

Code	Parameter	Min.	Max.	Unit	Default	ID Number	Description
P1.1.1	Min Frequency	0.00	Max_ Frequency	Hz	12.00	101	Minimum output frequency, f[Hz].
P1.1.2	Max Frequency	FreqMin	320.00	Hz	60.00	102	Maximum output frequency, f[Hz].
P1.1.3	Acceleration Time	0.1	3000.0	s	60.0	103	Time from 0 Hz to maximum Hz.
P1.1.4	Deceleration Time	0.1	3000.0	s	60.0	104	Time from maximum Hz to 0 Hz.
P1.1.5	Motor NP Voltg	180	Motor VoltageMax	V	400	105	Motor nameplate voltage in Volts.
P1.1.6	Motor NP Freq	8.00	320.00	Hz	60.00	106	Motor nameplate frequency in Hertz.
P1.1.7	Motor Nom Speed	24	20000	rpm	1720	111	Motor nameplate speed in Rpm.
P1.1.8	Motor Nom Currnt	Motor CurrentMin	Motor CurrentMax	A	5.40	108	Motor nameplate current, I[A]
P1.1.9	Power Factor	0.30	1.00		0.85	109	Motor power factor. (Cos Phii)
P1.1.10	Service Factor	0.10	2.00		1.00	110	Motor service factor. This will calculate the motor current limit. (MotorNomCurrent x Service Factor)
P1.1.11	Current Limit	Motor CurrentMin	Motor CurrentMax	A	7.00	107	Output current limit of the unit in Amps.
P1.1.12	Start Srce Hand	1	3		1	112	Parameter for Local Start/Stop/ Reverse control location. Default = Keypad **1** = Keypad **2** = DI-1 Start **3** = I/O Three Wire

Table 10-2: Quick Setup Parameters — M1 → G1.1, continued

Code	Parameter	Min.	Max.	Unit	Default	ID Number	Description
P1.1.13	StPt Source Hand	0	3		2	113	Local speed setpoint selection: **0** = analog input AI-1 **1** = analog input AI-2 **2** = Speed Setpoint from Keypad **3** = Motor Potentiometer
P1.1.14	Start Srce Auto	1	4		2	114	Parameter for Remote Start/ Stop/Reverse control location. Default = DI-1 Start **1** = Keypad **2** = DI-1 Start **3** = I/O Three Wire **4** = Fieldbus
P1.1.15	StPt Source Auto	0	4		0	115	PI-setpoint selection: **0** = analog input AI-1 **1** = analog input AI-2 **2** = PI Setpoint from Keypad **3** = Motor Potentiometer **4** = PI Setpoint from Fieldbus
P1.1.16	PI-Input Source	0	2		0	1106	PI-Controller Input Source Selection: Default #0 = (A) AI-1 **0** = (A) AI-1 **1** = (A) AI-2 **2** = Fieldbus, Process Data 1 **3** = Min. Both **4** = Max. Both **5** = Ave. Both
P1.1.17	PI-Contr. P-Gain	0.00	10.00		0.10	1109	P-Term (Gain) for the PI-Controller
P1.1.18	PI-Contr. I-Time	0.00	320.00	s	30.00	1110	I-Term (Integral Time) for the PI-controller
P1.1.19	PI-Deadband	0.0	100.0	%	0.0	1111	Deadband for the PI-controller
P1.1.20	PI-Mode	0	1		0	1112	PI-controller acting mode
P1.1.21	AutoAccelTime	0.1	3000.0	s	60.0	1113	Acceleration time, when in AUTO mode
P1.1.22	AutoDecelTime	0.1	3000.0	s	60.0	1114	Deceleratin time, when in AUTO mode

Input Signals — M1 → G1.2

Table 10-3: Input Signals — M1 → G1.2

Code	Parameter	Min.	Max.	Unit	Default	ID Number	Description
P1.2.1	Start Mode	0	3		1	201	Start Function: **0** = Normal start without interlockings. **1** = Interlocked start. One of the digital inputs must be programmed to Intlk/RunEna. DI-3 is defaulted for this feature. **2** = Mode 1 + timeout supervision. If the interlock is not OK within the interlock timeout time, start request is ignored and must be given again. **3** = Delayed start. Start request is given after delay time has expired.
P1.2.2	Intlk Stop Mode	0	1		1	216	**0** = Coasting **1** = Ramp
P1.2.3	Intlk Timeout	0.00	300.00	s	5.00	202	Interlock timeout time for Start Function #2. Default = 5s.
P1.2.4	Start Delay Time	0.00	300.00	s	5.00	203	Start delay time for Start Function #3. Default = 5s.
P1.2.5	(A) DI-2 Funct.	0	17		1	204	Default #1 External Fault Close **0** = Stop pulse, when 3-wire start/stop logic is selected. (False=Stop, True=Ready to Run) **1** = Ext. fault, closing contact **2** = External fault, opening contact **3** = Fault reset **4** = Run enable-Closed Contact **5** = Force ctrl. place to Hand **6** = Force ctrl. place to Auto **7** = Reverse **8** = Speed Select 1 **9** = Fire Mode-Closed Contact **10** = Speed Select 2 **11** = Speed Select 3 **12** = Force Bypass **13** = External interlock closed **14** = External interlock open **15** = Mot. Pot. UP **16** = Mot. Pot. DOWN **17** = Fire Mode-Open Contact

⚠ CAUTION

Unattended start will occur if power is supplied with Start Command activated.

Table 10-3: Input Signals — M1 → G1.2, continued

Code	Parameter	Min.	Max.	Unit	Default	ID Number	Description
P1.2.6	(A) DI-3 Funct.	0	17		13	205	Default #13 Interlock/Run Enable **0** = Not Used **1** = Ext. fault, closing contact **2** = External fault, opening contact **3** = Fault reset **4** = Run enable-Closed Contact **5** = Force ctrl. place to Hand **6** = Force ctrl. place to Auto **7** = Reverse **8** = Speed Select 1 **9** = Fire Mode-Closed Contact **10** = Speed Select 2 **11** = Speed Select 3 **12** = Force Bypass **13** = External interlock closed **14** = External interlock open **15** = Mot. Pot. UP **16** = Mot. Pot. DOWN **17** = Fire Mode-Open Contact
P1.2.7	(A) DI-4 Funct.	0	17		8	206	Default #8 Speed Select 1 **0** = Not Used **1** = Ext. fault, closing contact **2** = External fault, opening contact **3** = Fault reset **4** = Run enable-Closed Contact **5** = Force ctrl. place to Hand **6** = Force ctrl. place to Auto **7** = Reverse **8** = Speed Select 1 **9** = Fire Mode-Closed Contact **10** = Speed Select 2 **11** = Speed Select 3 **12** = Force Bypass **13** = External interlock closed **14** = External interlock open **15** = Mot. Pot. UP **16** = Mot. Pot. DOWN **17** = Fire Mode-Open Contact

Table 10-3: Input Signals — M1 → G1.2, continued

Code	Parameter	Min.	Max.	Unit	Default	ID Number	Description
P1.2.8	(A) DI-5 Funct.	0	17		9	207	Default #9 Fire-Mode **0** = Not Used **1** = Ext. fault, closing contact **2** = External fault, opening contact **3** = Fault reset **4** = Run enable-Closed Contact **5** = Force ctrl. place to Hand **6** = Force ctrl. place to Auto **7** = Reverse **8** = Speed Select 1 **9** = Fire Mode-Closed Contact **10** = Speed Select 2 **11** = Speed Select 3 **12** = Force Bypass **13** = External interlock closed **14** = External interlock open **15** = Mot. Pot. UP **16** = Mot. Pot. DOWN **17** = Fire Mode-Open Contact
P1.2.9	(A) DI-6 Funct.	0	17		0	208	Default #0 Overload Fault Relay-input **0** = Overload fault relay (Used in Intellipass) **1** = Ext. fault, closing contact **2** = External fault, opening contact **3** = Fault reset **4** = Run enable-Closed Contact **5** = Force ctrl. place to Hand **6** = Force ctrl. place to Auto **7** = Reverse **8** = Speed Select 1 **9** = Fire Mode-Closed Contact **10** = Speed Select 2 **11** = Speed Select 3 **12** = Force Bypass **13** = External interlock closed **14** = External interlock open **15** = Mot. Pot. UP **16** = Mot. Pot. DOWN **17** = Fire Mode-Open Contact
P1.2.10	(A) AI-1 Minimum	0.00	Max.	%	0.00	217	Default applies for 0V or 0 mA
P1.2.11	(A) AI-1 Maximum	Min.	100.0	%	100.00	218	Default applies for 10V or 20 mA
P1.2.12	(A) AI-1 Invert	0	1		0	209	**0** = Not inverted **1** = Inverted
P1.2.13	(A) AI-1 Filter	0.00	10.00	s	0.10	210	**0** = No filtering
P1.2.14	(A) AI-2 Minimum	0.00	Max.	%	20.00	219	Default applies for 2V or 4 mA

Table 10-3: Input Signals — M1 → G1.2, continued

Code	Parameter	Min.	Max.	Unit	Default	ID Number	Description
P1.2.15	(A) AI-2 Maximum	Min.	100.0	%	100.00	220	Default applies for 10V or 20 mA
P1.2.16	(A) AI-2 Invert	0	1		0	212	**0** = Not inverted **1** = Inverted
P1.2.17	(A) AI-2 Filter	0.00	10.00	s	0.10	213	**0** = No filtering
P1.2.18	StPt. Scale Min	0.0	100.0	%	0.0	214	Speed that corresponds to the minimum setpoint signal.
P1.2.19	StPt. Scale Max	0.0	100.0	%	0.0	215	Speed that corresponds to the maximum setpoint signal. 0.0%=NOT IN USE!
P1.2.20	MotPotStPt Memory	0	1		0	221	Parameter to select reset function for motor potentiometer speed setpoint. Default: No reset.

Output Signals — M1 → G1.3

Table 10-4: Output Signals — M1 → G1.3

Code	Parameter	Min.	Max.	Unit	Default	ID Number	Description
P1.3.1	(A) AO-1 Funct.	0	8		1	301	Analog output function: **0** = FB-Control (Fieldbus Passthrough, ProcessDataIN3) **1** = O/P frequency (0 - f max) **2** = Reference frequency (0 - f max) **3** = Motor speed (0 - 100% x Motor nom. speed) **4** = O/P current (0 - 100% x I nMot) **5** = Motor torque (0 - 100% x T nMot) **6** = Motor power (0 - 100% x P nMot) **7** = Motor voltage (0 - 100% x U nMot) **8** = DC-Bus Voltage (0 - 100% x U nMot)
P1.3.2	(A) AO-1 Filter	0.00	10.00	s	1.00	302	
P1.3.3	(A) AO-1 Invert	0	1		0	303	**0** = Not inverted **1** = Inverted
P1.3.4	(A) AO-1 Min.	0	1		0	304	**0** = 0 mA **1** = 4 mA
P1.3.5	(A) AO-1 Scale	10	1000	%	100	305	

Table 10-4: Output Signals — M1 ➔ G1.3, continued

Code	Parameter	Min.	Max.	Unit	Default	ID Number	Description
P1.3.6	(A) DO-1 Funct.	0	26		1	306	Default=Drive Ready **0** = Not used **1** = Drive Ready **2** = Drive Running **3** = General Fault **4** = General Fault inverted **5** = Drive overheat warning **6** = External fault or warning **7** = Reference (4mA) fault or warning **8** = General Warning **9** = Drive Reversing **10** = Preset Speed Active **11** = Speed setpoint=Actual Speed (=At speed) **12** = Motor regulator activated **13** = Actual Speed limit supervision **14** = Speed Setpoint limit supervision **15** = Torque limit supervision **16** = Timer On/Timer Off output control (Trigger is run request) **17** = Selections #16 inverted **18** = Frequency converter temperature limit supervision **19** = Unrequested rotation direction **20** = Thermistor fault / warning **21** = Hand Control Active **22** = Auto Control Active **23** = DI-Fire Mode Active **24** = Relay to energize an external element before starting the drive. **25** = FB-Control **26** = Bypass Run
P1.3.7	(B) RO-1 Funct.	0	25		2	307	Same as parameter 1.3.6.
P1.3.8	(B) RO-2 Funct.	0	25		3	308	Same as parameter 1.3.6
P1.3.9	(D) RO-1 Funct.	0	25		0	309	Same as parameter 1.3.6
P1.3.10	(D) RO-2 Funct.	0	25		0	310	Same as parameter 1.3.6
P1.3.11	(D) RO-3 Funct.	0	25		0	311	Same as parameter 1.3.6
P1.3.12	Sp.StPt Supv Fct	0	2		0	312	Speed Setpoint Supervision Function: **0** = Not used **1** = Low limit **2** = High limit
P1.3.13	Sp.StPt Supv Lim	0.0	100.0	%	0.0	313	Speed Setpoint Supervision Value.

Table 10-4: Output Signals — M1 → G1.3, continued

Code	Parameter	Min.	Max.	Unit	Default	ID Number	Description
P1.3.14	Act.Sp. Supv Fct	0	2		0	314	Actual Speed Supervision Function: **0** = Not used **1** = Low limit **2** = High limit
P1.3.15	Act.Sp. Supv Lim	0.0	100.0	%	0.0	315	Actual Speed Supervision Value. (±1.0% hysteresis)
P1.3.16	Torque Supv Fct	0	2		0	316	Torque Limit Supervision Function: **0** = Not used **1** = Low limit **2** = High limit
P1.3.17	Torque Supv Lim	0.0	300.0	%	0.0	317	Torque Limit Supervision Value
P1.3.18	TempLim Supv Fct	0	2		0	318	Temperature Limit Supervision Function: **0** = Not used **1** = Low limit **2** = High limit
P1.3.19	TempLim Supv Lim	-50	170	°F	104	319	Temperature Limit Supervision value
P1.3.20	StartRlyON-Del.	0.0	100.0	s	0.0	320	Relay/Digital output ON-delay time after start-command is given.
P1.3.21	StartRlyOFF-Del.	0.0	100.0	s	0.0	321	Relay/Digital output OFF-delay time after stop-command is given.

Drive Control Parameters — M1 → G1.4

Table 10-5: Drive Control Parameters — M1 → G1.4

Code	Parameter	Min.	Max.	Unit	Default	ID Number	Description
P1.4.1	Start Mode	0	1		0	401	**0** = Ramp **1** = Flying start
P1.4.2	Stop Mode	0	1		1	402	**0** = Coasting **1** = Ramp
P1.4.3	Brake Chopper	0	4		0	403	Brake Chopper Mode Selection. **0** = Brake NO, Test NO **1** = Brake YES(Run), Test YES (Ready+run) **2** = Brake chopper EXTERNAL, Test NO **3** = Brake YES(Ready+run), Test YES (Ready+run) **4** = Brake YES(Run), Test NO
P1.4.4	S-curve Time	0.0	10.0	s	0.0	404	Smooth ratio for S-curve

Prohibit Frequencies— M1 → G1.5

Table 10-6: Prohibit Frequencies — M1 → G1.5

Code	Parameter	Min.	Max.	Unit	Default	ID Number	Description
P1.5.1	SkipF1 Low Lim	0.0	100.0	%	0.0	501	Prohibit speed range 1 low limit.
P1.5.2	SkipF1 High Lim	Range_1_ Low_Lim	100.0	%	0.0	502	Prohibit speed range 1 high limit: **0** = No prohibit frequency range
P1.5.3	SkipF2 Low Lim	0.0	100.0	%	0.0	503	Prohibit speed range 2 low limit
P1.5.4	SkipF2 High Lim	Range_2_ Low_Lim	100.0	%	0.0	504	Prohibit speed range 2 high limit: **0** = No prohibit frequency range
P1.5.5	SkipF3 Low Lim	0.0	100.0	%	0.0	505	Prohibit speed range 3 low limit
P1.5.6	SkipF3 High Lim	Range_3_ Low_Lim	100.0	%	0.0	506	Prohibit speed range 3 high limit: **0** = No prohibit frequency range
P1.5.7	SkipF4 Low Lim	0.0	100.0	%	0.0	507	Prohibit speed range 4 low limit
P1.5.8	SkipF4 High Lim	Range_4_ Low_Lim	100.0	%	0.0	508	Prohibit speed range 4 high limit: **0** = No prohibit frequency range
P1.5.9	SkipF5 Low Lim	0.0	100.0	%	0.0	509	Prohibit speed range 5 low limit
P1.5.10	SkipF5 High Lim	Range_5_ Low_Lim	100.0	%	0.0	510	Prohibit speed range 5 high limit: **0** = No prohibit frequency range
P1.5.11	SkipF6 Low Lim	0.0	100.0	%	0.0	511	Prohibit speed range 6 low limit
P1.5.12	SkipF6 High Lim	Range_6_ Low_Lim	100.0	%	0.0	512	Prohibit speed range 6 high limit: **0** = No prohibit frequency range
P1.5.13	PH Acc/Dec Ramp	0.1	10.0	x	1.0	513	Acceleration/Deceleration time factor to pass prohibit speed window.

Motor Control Parameters — M1 → G1.6

Table 10-7: Motor Control Parameters — M1 → G1.6

Code	Parameter	Min.	Max.	Unit	Default	ID Number	Description
P1.6.1	Motor Ctrl Mode	0	1		0	601	Motor control mode: **0** = frequency control **1** = speed control
P1.6.2	V/Hz Optim.	0	1		0	602	V/F optimization selection: **0** = none **1** = automatic torque boost
P1.6.3	V/Hz Ratio	0	3		0	603	V/F ratio selection: **0** = linear **1** = squared **2** = programmable **3** = Linear with flux optim.
P1.6.4	Field WeakngPnt	8.00	320.00	Hz	60.00	604	Field weakening point.
P1.6.5	Voltage at FWP	10.00	200.00	%	100.00	605	Motor voltage (%*MotorNPVoltage) at field weakening point.
P1.6.6	V/Hz Mid Freq	0.00	Field Weakening Point	Hz	60.00	606	Programmable V/Hz curve middle point frequency.
P1.6.7	V/Hz Mid Voltg	0.00	100.00	%	100.00	607	Motor voltage (%*MotorNPVoltage) at programmable V/Hz curve middle point.
P1.6.8	Zero Freq Voltg	0.00	40.00	%	0.00	608	Motor voltage (%*MotorNPVoltage) at zero speed.
P1.6.9	Switching Freq	1.0	Switching FreqMax	kHz	3.6	609	Switching frequency in kHz. See **Appendix A**, **Table A-1**.
P1.6.10	Overvolt Contr	0	2		1	610	**0** = Off **1** = On with no ramping **2** = On with ramping
P1.6.11	Undervolt Contr	0	1		1	611	**0** = Off **1** = On
P1.6.12	Identification	0	2		0	612	Identification run. When this parameter is set greater than zero, then start command must be given within 20 seconds.

Protections — M1 → G1.7

Table 10-8: Protections — M1 → G1.7

Code	Parameter	Min.	Max.	Unit	Default	ID Number	Description
P1.7.1	Input Phase Supv	0	2		2	701	Response to input phase supervision. **0** = No Action **1** = Warning **2** = Fault
P1.7.2	4mA Fault Resp	0	2		0	702	Response to 4 mA signal supervision. **0** = No Action **1** = Warning **2** = Fault
P1.7.3	Ext. Fault Resp	0	2		2	703	Response to external fault digital input signal supervision. **0** = No Action **1** = Warning **2** = Fault
P1.7.4	FBComm. FaultResp	0	2		0	704	Response to fieldbus communication supervision. **0** = No Action **1** = Warning **2** = Fault
P1.7.5	SlotComFault Resp	0	2		0	705	Response to slot communication supervision. **0** = No Action **1** = Warning **2** = Fault
P1.7.6	Motor Therm Prot	0	3		0	707	**0** = No response **1** = Warning **2** = Fault, stop mode after fault according to ID402 **3** = Fault, stop mode after fault always by coasting
P1.7.7	MotAmbTemp Factor	-100.0	100.0	%	0.0	708	Percent of ambient temperature.
P1.7.8	MTP f0 Current	0.0	150.00	%	40.0	709	Percent of motor nameplate current.
P1.7.9	MTP Motor T	1	200	min	45	710	Time to reach 63% of final value.
P1.7.10	Motor Duty Cycle	0	100	%	100	711	Percent of nominal motor load
P1.7.11	Stall Protection	0	2		0	712	**0** = No response **1** = Warning **2** = Fault, stop mode after fault according to ID402 **3** = Fault, stop mode after fault always by coasting
P1.7.12	Stall Current	0.00	Motor CurrentMax	A	1.00	713	
P1.7.13	Stall Time Lim	1.00	120.00	s	15.00	714	
P1.7.14	Stall Freq Lim	1.00	Max_Freq	Hz	25.00	715	

Tables 10-8: Protections — M1 → G1.7, continued

Code	Parameter	Min.	Max.	Unit	Default	ID Number	Description
P1.7.15	Underload Protection	0	3		0	716	**0** = No response **1** = Warning **2** = Fault, stop mode after fault according to ID402 **3** = Fault, stop mode after fault always by coasting
P1.7.16	UP fnom Torque	10.0	150.00	%	50.0	717	Minimum torque allowed when above FWP.
P1.7.17	UP f0 Torque	5.0	150.00	%	10.0	718	Minimum torque allowed with zero frequency.
P1.7.18	UP Time Limit	2.00	600.00	s	20.00	719	
P1.7.19	Autom. Restart	0	3		0	706	Resets faults. See **Page 15-20**. **0** = Disabled **1** = Automatically transferred to Bypass **2** = Reset drive only **3** = Reset drive, if fails, transferred to Bypass
P1.7.20	Fire Mode Speed	0	100.0	%	100	804	When fire mode input is triggered, drive will run at fire mode speed.

Fieldbus Parameters — M1 → G1.8

Table 10-9: Fieldbus Parameters — M1 → G1.8

Code	Parameter	Min.	Max.	Unit	Default	ID Number	Description
P1.8.1	FB Data Out1 Sel	0	10000		1 ①	1001	Fieldbus process data output 1 selection. Default = Actual Speed
P1.8.2	FB Data Out2 Sel	0	10000		5 ①	1002	Fieldbus process data output 2 selection. Default = Motor Current
P1.8.3	FB Data Out3 Sel	0	10000		8 ①	1003	Fieldbus process data output 3 selection. Default = Motor Voltage
P1.8.4	FB Data Out4 Sel	0	10000		7 ①	1004	Fieldbus process data output 4 selection. Default = Motor Power
P1.8.5	FB Data Out5 Sel	0	10000		9 ①	1005	Fieldbus process data output 5 selection. Default = DC-Link Voltage

① ID number of parameter or variable to be sent over fieldbus. ID 1 – 20 are Monitoring values, Menu 7 (M7). See **Table 10-13**.

Table 10-9: Fieldbus Parameters — M1 → G1.8, continued

Code	Parameter	Min.	Max.	Unit	Default	ID Number	Description
P1.8.6	FB Data Out6 Sel	0	10000		20 ①	1006	Fieldbus process data output 6 selection. Default = Application Status Word (Variable:ApplStatusWord) **b0** = Drive Ready **b1** = Run Enable **b2** = Drive Running **b3** = Drive Reversing **b4** = General Fault **b5** = General Warning **b6** = Preset Speed Active **b7** = Motor Regulator active **b8** = Output speed supervision indication **b9** = Setpoint speed supervision indication **b10** = HAND Control indication **b11** = AUTO Control indication **b12** = D-IN Firemode **b13** = Damper control signal **b14** = Bypass mode status indication **b15** = Bypass running
P1.8.7	FB Data Out7 Sel	0	10000		18 ①	1007	Fieldbus process data output 7 selection. Default = Active Fault Code
P1.8.8	FB Data Out8 Sel	0	10000		19 ①	1008	Fieldbus process data output 8 selection. Default = Active Warning Code

① ID number of parameter or variable to be sent over fieldbus. ID 1 – 20 are Monitoring values, Menu 7 (M7). See **Table 10-13**.

PI-Control Parameters — M1 → G1.9

Table 10-10: PI-Control Parameters — M1 → G1.9

Code	Parameter	Min.	Max.	Unit	Default	ID Number	Description
P1.9.1	Setpoint Min.	Sensor_Min	PI_Setpoint_Max	%	0.0	1102	Minimum limit for the PI-Controller setpoint.
P1.9.2	Setpoint Max.	PI_Setpoint_Min	Sensor_Max	%	100.0	1103	Maximum limit for the PI-Controller setpoint.
P1.9.3	PI-Input Source	0	5		0	1106	PI-Controller Input Source Selection: Default #0 = (A) AI-1 **0** = (A) AI-1 **1** = (A) AI-2 **2** = Fieldbus, ProcessData1 **3** = Min. Both **4** = Max. Both **5** = Ave. Both
P1.9.4	PI-StPt Ramp Time	0.00	20.00	s	1.00	1104	Parameter for the PI-Setpoint ramp time.
P1.9.5	PI-Contr. P-Gain	0.00	10.00		0.10	1109	P-Term (Gain) for the PI-controller.
P1.9.6	PI-Contr. I-Time	0.00	320.00		30.00	1110	I-Term (Integral Time) for the PI-controller.
P1.9.7	Deadband	0.0	100.0	%	0.0	1111	Deadband for the PI-controller
P1.9.8	PI Acting Mode	0	1		1	1112	PI-controller acting mode. **0** = Reverse acting **1** = Forward acting
P1.9.9	Auto Accel. Time	0.1	3000.0	s	60.0	1113	Auto Mode Accel. Time
P1.9.10	Auto Decel. Time	0.1	3000.0	s	60.0	1114	Auto Mode Decel. Time
P1.9.11	Auto S-Curve Time	0.0	10.0	s	0.0	1115	Auto Mode and PI-control is NOT active

Preset Speeds — M1 → G1.10

Table 10-11: Preset Speeds — M1 → G1.10

Code	Parameter	Min.	Max.	Unit	Step	Default	ID Number	Description
P1.10.1	Preset Speed 1	0	100.0	%	0.1	30.0	1701	Preset speeds when Digital Inputs are programmed
P1.10.2	Preset Speed 2	0	100.0	%	0.1	40.0	1702	
P1.10.3	Preset Speed 3	0	100.0	%	0.1	50.0	1703	
P1.10.4	Preset Speed 4	0	100.0	%	0.1	60.0	1704	
P1.10.5	Preset Speed 5	0	100.0	%	0.1	70.0	1705	
P1.10.6	Preset Speed 6	0	100.0	%	0.1	80.0	1706	
P1.10.7	Preset Speed 7	0	100.0	%	0.1	90.0	1707	

Keypad Control Parameters — M2

This menu provides the parameters for the setting of the keypad speed setpoint, the selection of motor direction when in keypad operation, and when the STOP button is active.

Table 10-12: Keypad Control Parameters — M2

Code	Parameter	Min.	Max.	Unit	Default	ID Number ①	Description
R2.1	Speed Setpoint	0.0	100.0	%	0.0		Keypad Speed Setpoint.
P2.2	Keypad Direction	0	1		0	1009	Reverse request active from the panel **0** = Forward **1** = Reverse
P2.3	StopButton Active	0	1		1	1110	Stop button (Keypad) always active (Yes/No)
R2.4	PI-Setpoint	PI_Setpoint_ Min	PI_Setpoint_ Max	%	0.0		
P2.5	PI-Setpoint Default	PI_Setpoint_ Min	PI_Setpoint_ Max			1011	PI-regulators default setpoint

① Keypad Control Parameter ID Numbers are listed separately on **Page 15-28**.

Menus — M3 to M6

Menus M3 to M6 provide information on the Active Faults, Fault History, System Menu settings and the Expander Board setup. These menu items are explained in detail in **Chapter 6**.

Monitoring Menu — M7

The monitored items are the actual values of parameters and signals as well as the status and measurements of other elements. Monitored items cannot be edited.

See **Chapter 6** — Menu information item M7, for more information.

Table 10-13: Monitoring Menu

Code	Parameter	Min.	Max.	Unit	Default	ID Number	Description
V7.1	Output Frequency	-320.00	320.00	Hz	0.00	2	Output frequency to the motor
V7.2	Actual Speed	-320.0	320.0	%	0.0	1	Output speed to the motor
V7.3	Speed Setpoint	-320.0	320.0	%	0.0	3	Monitored speed setpoint. This will show also the speed setpoint below the minimum frequency.
V7.4	Motor Speed	-10000	10000	rpm	0	4	Calculated motor speed in rpm
V7.5	Motor Current	0.0	Motor CurrentMax	A	0.0	5	
V7.6	Motor Torque	-300.0	300.0	%	0.0	6	[R] Motor torque as % value, +1000 equals +100.0 % pos = clockwise, neg = counterclockwise
V7.7	Motor Power	-300.0	300.0	%	0.0	7	
V7.8	Motor Voltage	0.0	1000.0	V	0.0	8	Measured motor voltage

Table 10-13: Monitoring Menu, continued

Code	Parameter	Min.	Max.	Unit	Default	ID Number	Description
V7.9	DC-Bus Voltage	0	1000	V	0	9	[R] DC voltage in Volts Tfilt = 32ms.
V7.10	Unit Temperature	-1000	1000	°F	0	10	Temperature of the heat sink
V7.11	Motor Temperature	0.0	1000.0	%	0.0	11	
V7.12	(A) AI-1	-10.00	20.00	V	0.00	12	Voltage Input value [V]
V7.13	(A) AI-2	-10.00	20.00	mA	0.00	13	Current Input value [mA]
V7.14	DI-1 DI-2 DI-3	0	7		0	14	DIA-1, DIA-2 and DIA-3 status
V7.15	DI-4 DI-5 DI-6	0	7		0	15	DIB-4, DIB-5 and DIB-6 status
V7.16	DO-1 RO-1 RO-2	0	7		0	16	DO-1, RO-1 and RO-2 status
V7.17	(A) AO-1	0.00	20.00	mA	0.00	17	
V7.18	ActFaultCode	0	200		0	18	Active Fault code.
V7.19	ActWarnCode	0	200		0	19	Active Warning code.
V7.20	Status Word	-32768	32767		0	20	**b0** = Drive Ready **b1** = Run Enable **b2** = Drive Running **b3** = Drive Reversing **b4** = General Fault **b5** = General Warning **b6** = Preset Speed Active **b7** = Motor Regulator Active **b8** = Output speed supervision indication **b9** = Setpoint speed supervision indication **b10** = HAND Control indication **b11** = AUTO Control indication **b12** = D-IN Firemode **b13** = Damper control signal **b14** = Bypass mode status indication **b15** = Bypass running
V7.21	PI-Setpoint	0.0	100.0	%	0.0	21	
V7.22	PI-Input	0.0	100.0	%	0.0	22	Actual Sensor Value
V7.23	PI-Error	0.0	100.0	%	0.0	23	
V7.24	PI-Output	0.0	100.0	%	0.0	24	
V7.25 ①	RO-1 RO-2 RO-3	0	7		0	25	Monitoring the OPTB5 relay outputs.
G7.26	Multimonitor	—	—		—	—	Displays three monitor values simultaneously

① When OPTB5 is not installed in option slot C, this in not displayed.

Operate Menu — M8

The Operate Menu provides an easy to use method of viewing key numerical Monitoring Menu items. It also allows the setting of the keypad frequency reference. See **Chapter 6** for more information.

Chapter 11 — Duct Static Application (SVCHS202)

Introduction

The Duct Static Application is typically used to control fans with a pressure transducer and provide WC/PA units to a keypad.

The direct frequency reference can be used for the control without the PI controller and is selected from the analog inputs, fieldbus, motor potentiometer or keypad.

The Duct Static Application is typically used to control Duct pressure. In these applications, the Duct Static Application provides a smooth control and an integrated measurement and control package where no additional components are needed.

- Digital inputs DI-2, DI-3 and DI-5 and all outputs are freely programmable.

Additional functions:

- Analog input signal range selection
- One frequency limit supervision
- Torque limit supervision
- Speed setpoint limit supervision
- Programmable start and stop functions
- DC Brake Chopper
- Six skip frequency areas
- Programmable V/Hz curve and switching frequency
- Auto restart
- Motor thermal and stall protection: Programmable action; off, warning, fault
- Motor underload protection
- Input and output phase supervision

Details of the parameters shown in this section are available in **Chapter 15** of this Manual, listed by parameter ID number.

Control Input/Output

Table 11-1: Duct Static Application Default I/O Configuration

	Terminal		Signal	Description
	OPTA9			
	1	+10V DC_{ref}	Reference output	Voltage for potentiometer, etc.
0 to 10V DC (Factory Default)	2	AI-1+	Analog input, voltage range 0 – 10V DC	Voltage input for PI setpoint or feedback (Programmable)
	3	AI-1-	I/O Ground	Ground for reference and controls
4 to 20 mA (Factory Default)	4	AI-2+	Analog input, current range 0 – 20 mA	Current input for PI setpoint or feedback (Programmable)
	5	AI-2-		
	6	24V DC	Control voltage output	Voltage for switches, etc. max 0.1A
	7	GND	I/O ground	Ground for reference and controls
External Interlock Wiring	8	DI-1	Start/Stop Control	Contact closed = start
	9	DI-2	External fault input (programmable)	Contact closed = fault Contact open = no fault
	10	DI-3	External Interlock (programmable)	Contact closed = OK Open = Interlocked
	11	CMA	Common for DI-1 – DI-3	Connect to GND or 24V DC
	12	24V DC	Control voltage output	Voltage for switches (see terminal 6)
	13	GND	I/O ground	Ground for reference and controls
External Interlock Wiring	14	DI-4	Speed Select 1 (programmable)	Contact closed = Speed Select 1
	15	DI-5	Fire Mode (programmable)	Contact closed = Fire Mode active
	16	DI-6	Overload relay (IntelliPass) (programmable)	Contact open = no fault Contact closed = fault
	17	CMB	Common for DI-4 – DI-6	Connect to GND or 24V DC
0 to 20 mA (Factory Default)	18	AO-1+	Output frequency Analog output	Programmable Range 0 – 20 mA, R_L max. 500W
	19	AO-1		
	20	DO-1	Digital output READY	Programmable Open collector, I ≤ 50 mA, V ≤ 48V DC
Defaults:	**OPTA2**			
21-22 Opens on RUN	21	RO-1	Relay output 1	Programmable Drive RUN is default.
22-23 Closes on RUN	22	RO-1		
	23	RO-1		
24-25 Opens on FAULT	24	RO-2	Relay output 2	Programmable Drive FAULT is default.
25-26 Closes on FAULT	25	RO-2		
	26	RO-2		

Note: For more information on jumper selections, see **Chapter 4**.

X3 Jumper Setting — CMA and CMB Grounding

CMB Connected to Ground
CMA Connected to Ground

CMB Isolated from Ground
CMA Isolated from Ground

CMB and CMA Internally Connected and Isolated from Ground

CAUTION

Unattended start will occur if power is supplied with Start Command activated.

Parameter Lists

On the next pages you will find the lists of parameters within the respective parameter groups. The parameter descriptions are given by ID number in **Chapter 15**.

Column explanations:

Code	=	Location indication on the keypad; Shows the operator the present parameter number
Parameter	=	Name of parameter
Min.	=	Minimum value of parameter
Max.	=	Maximum value of parameter
Unit	=	Unit of parameter value; Given if available
Default	=	Value preset by factory
ID	=	ID number of the parameter for reference to **Chapter 15**

Quick Setup Parameters — M1 → G1.1

Table 11-2: Quick Setup Parameters — M1 → G1.1

Code	Parameter	Min.	Max.	Unit	Default	ID Number	Description
P1.1.1	Min Frequency	0.00	Max_ Frequency	Hz	12.00	101	Minimum output frequency, f[Hz].
P1.1.2	Max Frequency	FreqMin	320.00	Hz	60.00	102	Maximum output frequency, f[Hz].
P1.1.3	Acceleration Time	0.1	3000.0	s	60.0	103	Time from 0 Hz to maximum Hz.
P1.1.4	Deceleration Time	0.1	3000.0	s	60.0	104	Time from maximum Hz to 0 Hz.
P1.1.5	Motor NP Voltg	180	Motor VoltageMax	V	400	105	Motor nameplate voltage in Volts.
P1.1.6	Motor NP Freq	8.00	320.00	Hz	60.00	106	Motor nameplate frequency in Hertz.
P1.1.7	Motor Nom Speed	24	20000	rpm	1720	111	Motor nameplate speed in Rpm.
P1.1.8	Motor Nom Currnt	Motor CurrentMin	Motor CurrentMax	A	5.40	108	Motor nameplate current, I[A]
P1.1.9	Power Factor	0.30	1.00		0.85	109	Motor power factor. (Cos Phii)
P1.1.10	Service Factor	0.10	2.00		1.00	110	Motor service factor. This will calculate the motor current limit. (MotorNomCurrent x Service Factor)
P1.1.11	Current Limit	Motor CurrentMin	Motor CurrentMax	A	7.00	107	Output current limit of the unit in Amps.
P1.1.12	Start Srce Hand	1	3		1	112	Parameter for Local Start/Stop/ Reverse control location. Default = Keypad **1** = Keypad **2** = DI-1 Start **3** = I/O Three Wire

Table 11-2: Quick Setup Parameters — M1 → G1.1, continued

Code	Parameter	Min.	Max.	Unit	Default	ID Number	Description
P1.1.13	StPt Source Hand	0	3		2	113	Local speed setpoint selection: **0** = analog input AI-1 **1** = analog input AI-2 **2** = Speed Setpoint from Keypad **3** = Motor Potentiometer
P1.1.14	Start Srce Auto	1	4		2	114	Parameter for Remote Start/ Stop/Reverse control location. Default = DI-1 Start **1** = Keypad **2** = DI-1 Start **3** = I/O Three Wire **4** = Fieldbus
P1.1.15	StPt Source Auto	0	4		0	115	PI-setpoint selection: **0** = analog input AI-1 **1** = analog input AI-2 **2** = PI Setpoint from Keypad **3** = Motor Potentiometer **4** = PI Setpoint from Fieldbus
P1.1.16	PI-Input Source	0	2		0	1106	PI-Controller Input Source Selection: Default #0 = (A) AI-1 **0** = (A) AI-1 **1** = (A) AI-2 **2** = Fieldbus, Process Data 1 **3** = Min. Both **4** = Max. Both **5** = Ave. Both
P1.1.17	Sensor Min.	(-10000)	Sensor_Max		(0)	1107	Actual Sensor minimum value at 0/4 mA.
P1.1.18	Sensor Max.	Sensor_Min	(10000)		(2500)	1108	Actual Sensor maximum value at 20 mA.
P1.1.19	PI-Contr. P-Gain	0.00	10.00		0.10	1109	P-Term (Gain) for the PI-Controller
P1.1.20	PI-Contr. I-Time	0.00	320.00	s	30.00	1110	I-Term (Integral Time) for the PI-controller
P1.1.21	PI-Deadband	(0)	(20000)		(0)	1111	Deadband area in units. (Hysteresis to PI-Setpoint)
P1.1.22	AutoAccelTime	0.1	3000.0	s	60.0	1113	Acceleration time, when in AUTO mode
P1.1.23	AutoDecelTime	0.1	3000.0	s	60.0	1114	Deceleratin time, when in AUTO mode
P1.1.24	US/Metric Units	0	1		0	1101	

Input Signals — M1 → G1.2

Table 11-3: Input Signals — M1 → G1.2

Code	Parameter	Min.	Max.	Unit	Default	ID Number	Description
P1.2.1	Start Mode	0	3		1	201	Start Function: **0** = Normal start without interlockings. **1** = Interlocked start. One of the digital inputs must be programmed to Intlk/RunEna. DI-3 is defaulted for this feature. **2** = Mode 1 + timeout supervision. If the interlock is not OK within the interlock timeout time, start request is ignored and must be given again. **3** = Delayed start. Start request is given after delay time has expired.
P1.2.2	Intlk Stop Mode	0	1		1	216	**0** = Coasting **1** = Ramp
P1.2.3	Intlk Timeout	0.00	300.00	s	5.00	202	Interlock timeout time for Start Function #2. Default = 5s.
P1.2.4	Start Delay Time	0.00	300.00	s	5.00	203	Start delay time for Start Function #3. Default = 5s.
P1.2.5	(A) DI-2 Funct.	0	17		1	204	Default #1 External Fault Close **0** = Stop pulse, when 3-wire start/stop logic is selected. (False=Stop, True=Ready to Run) **1** = Ext. fault, closing contact **2** = External fault, opening contact **3** = Fault reset **4** = Run enable-Closed Contact **5** = Force ctrl. place to Hand **6** = Force ctrl. place to Auto **7** = Reverse **8** = Speed Select 1 **9** = Fire Mode-Closed Contact **10** = Speed Select 2 **11** = Speed Select 3 **12** = Force Bypass **13** = External interlock closed **14** = External interlock open **15** = Mot. Pot. UP **16** = Mot. Pot. DOWN **17** = Fire Mode-Open Contact

⚠ CAUTION

Unattended start will occur if power is supplied with Start Command activated.

Table 11-3: Input Signals — M1 → G1.2, continued

Code	Parameter	Min.	Max.	Unit	Default	ID Number	Description
P1.2.6	(A) DI-3 Funct.	0	17		13	205	Default #13 Interlock/Run Enable **0** = Not Used **1** = Ext. fault, closing contact **2** = External fault, opening contact **3** = Fault reset **4** = Run enable-Closed Contact **5** = Force ctrl. place to Hand **6** = Force ctrl. place to Auto **7** = Reverse **8** = Speed Select 1 **9** = Fire Mode-Closed Contact **10** = Speed Select 2 **11** = Speed Select 3 **12** = Force Bypass **13** = External interlock closed **14** = External interlock open **15** = Mot. Pot. UP **16** = Mot. Pot. DOWN **17** = Fire Mode-Open Contact
P1.2.7	(A) DI-4 Funct.	0	17		8	206	Default #8 Speed Select 1 **0** = Not Used **1** = Ext. fault, closing contact **2** = External fault, opening contact **3** = Fault reset **4** = Run enable-Closed Contact **5** = Force ctrl. place to Hand **6** = Force ctrl. place to Auto **7** = Reverse **8** = Speed Select 1 **9** = Fire Mode-Closed Contact **10** = Speed Select 2 **11** = Speed Select 3 **12** = Force Bypass **13** = External interlock closed **14** = External interlock open **15** = Mot. Pot. UP **16** = Mot. Pot. DOWN **17** = Fire Mode-Open Contact

Table 11-3: Input Signals — M1 → G1.2, continued

Code	Parameter	Min.	Max.	Unit	Default	ID Number	Description
P1.2.8	(A) DI-5 Funct.	0	17		9	207	Default #9 Fire-Mode **0** = Not Used **1** = Ext. fault, closing contact **2** = External fault, opening contact **3** = Fault reset **4** = Run enable-Closed Contact **5** = Force ctrl. place to Hand **6** = Force ctrl. place to Auto **7** = Reverse **8** = Speed Select 1 **9** = Fire Mode-Closed Contact **10** = Speed Select 2 **11** = Speed Select 3 **12** = Force Bypass **13** = External interlock closed **14** = External interlock open **15** = Mot. Pot. UP **16** = Mot. Pot. DOWN **17** = Fire Mode-Open Contact
P1.2.9	(A) DI-6 Funct.	0	17		0	208	Default #0 Overload Fault Relay-input **0** = Overload fault relay (Used in Intellipass) **1** = Ext. fault, closing contact **2** = External fault, opening contact **3** = Fault reset **4** = Run enable-Closed Contact **5** = Force ctrl. place to Hand **6** = Force ctrl. place to Auto **7** = Reverse **8** = Speed Select 1 **9** = Fire Mode-Closed Contact **10** = Speed Select 2 **11** = Speed Select 3 **12** = Force Bypass **13** = External interlock closed **14** = External interlock open **15** = Mot. Pot. UP **16** = Mot. Pot. DOWN **17** = Fire Mode-Open Contact
P1.2.10	(A) AI-1 Minimum	0.00	Max.	%	0.00	217	Default applies for 0V or 0 mA
P1.2.11	(A) AI-1 Maximum	Min.	100.0	%	100.00	218	Default applies for 10V or 20 mA
P1.2.12	(A) AI-1 Invert	0	1		0	209	**0** = Not inverted **1** = Inverted
P1.2.13	(A) AI-1 Filter	0.00	10.00	s	0.10	210	**0** = No filtering
P1.2.14	(A) AI-2 Minimum	0.00	Max.	%	20.00	219	Default applies for 2V or 4 mA
P1.2.15	(A) AI-2 Maximum	Min.	100.0	%	100.00	220	Default applies for 10V or 20 mA

Table 11-3: Input Signals — M1 → G1.2, continued

Code	Parameter	Min.	Max.	Unit	Default	ID Number	Description
P1.2.16	(A) AI-2 Invert	0	1		0	212	**0** = Not inverted **1** = Inverted
P1.2.17	(A) AI-2 Filter	0.00	10.00	s	0.10	213	**0** = No filtering
P1.2.18	StPt. Scale Min	0.0	100.0	%	0.0	214	Speed that corresponds to the minimum setpoint signal.
P1.2.19	StPt. Scale Max	0.0	100.0	%	0.0	215	Speed that corresponds to the maximum setpoint signal. 0.0%=NOT IN USE!
P1.2.20	MotPotStPt Memory	0	1		0	221	Parameter to select reset function for motor potentiometer speed setpoint. Default: No reset.

Output Signals — M1 → G1.3

Table 11-4: Output Signals — M1 → G1.3

Code	Parameter	Min.	Max.	Unit	Default	ID Number	Description
P1.3.1	(A) AO-1 Funct.	0	8		1	301	Analog output function: **0** = FB-Control (Fieldbus Passthrough, ProcessDataIN3) **1** = O/P frequency (0 - f max) **2** = Reference frequency (0 - f max) **3** = Motor speed (0 - 100% x Motor nom. speed) **4** = O/P current (0 - 100% x I nMot) **5** = Motor torque (0 - 100% x T nMot) **6** = Motor power (0 - 100% x P nMot) **7** = Motor voltage (0 - 100% x U nMot) **8** = DC-Bus Voltage (0 - 100% x U nMot)
P1.3.2	(A) AO-1 Filter	0.00	10.00	s	1.00	302	
P1.3.3	(A) AO-1 Invert	0	1		0	303	**0** = Not inverted **1** = Inverted
P1.3.4	(A) AO-1 Min.	0	1		0	304	**0** = 0 mA **1** = 4 mA
P1.3.5	(A) AO-1 Scale	10	1000	%	100	305	

Table 11-4: Output Signals — M1 ➔ G1.3, continued

Code	Parameter	Min.	Max.	Unit	Default	ID Number	Description
P1.3.6	(A) DO-1 Funct.	0	26		1	306	Default=Drive Ready **0** = Not used **1** = Drive Ready **2** = Drive Running **3** = General Fault **4** = General Fault inverted **5** = Drive overheat warning **6** = External fault or warning **7** = Reference (4mA) fault or warning **8** = General Warning **9** = Drive Reversing **10** = Preset Speed Active **11** = Speed setpoint=Actual Speed (=At speed) **12** = Motor regulator activated **13** = Actual Speed limit supervision **14** = Speed Setpoint limit supervision **15** = Torque limit supervision **16** = Timer On/Timer Off output control (Trigger is run request) **17** = Selections #16 inverted **18** = Frequency converter temperature limit supervision **19** = Unrequested rotation direction **20** = Thermistor fault / warning **21** = Hand Control Active **22** = Auto Control Active **23** = DI-Fire Mode Active **24** = Relay to energize an external element before starting the drive. **25** = FB-Control **26** = Bypass Run
P1.3.7	(B) RO-1 Funct.	0	25		2	307	Same as parameter 1.3.6.
P1.3.8	(B) RO-2 Funct.	0	25		3	308	Same as parameter 1.3.6
P1.3.9	(D) RO-1 Funct.	0	25		0	309	Same as parameter 1.3.6
P1.3.10	(D) RO-2 Funct.	0	25		0	310	Same as parameter 1.3.6
P1.3.11	(D) RO-3 Funct.	0	25		0	311	Same as parameter 1.3.6
P1.3.12	Sp.StPt Supv Fct	0	2		0	312	Speed Setpoint Supervision Function: **0** = Not used **1** = Low limit **2** = High limit
P1.3.13	Sp.StPt Supv Lim	0.0	100.0	%	0.0	313	Speed Setpoint Supervision Value.

Table 11-4: Output Signals — M1 → G1.3, continued

Code	Parameter	Min.	Max.	Unit	Default	ID Number	Description
P1.3.14	Act.Sp. Supv Fct	0	2		0	314	Actual Speed Supervision Function: **0** = Not used **1** = Low limit **2** = High limit
P1.3.15	Act.Sp. Supv Lim	0.0	100.0	%	0.0	315	Actual Speed Supervision Value. (±1.0% hysteresis)
P1.3.16	Torque Supv Fct	0	2		0	316	Torque Limit Supervision Function: **0** = Not used **1** = Low limit **2** = High limit
P1.3.17	Torque Supv Lim	0.0	300.0	%	0.0	317	Torque Limit Supervision Value
P1.3.18	TempLim Supv Fct	0	2		0	318	Temperature Limit Supervision Function: **0** = Not used **1** = Low limit **2** = High limit
P1.3.19	TempLim Supv Lim	-50	170	°F	104	319	Temperature Limit Supervision value
P1.3.20	StartRlyON-Del.	0.0	100.0	s	0.0	320	Relay/Digital output ON-delay time after start-command is given.
P1.3.21	StartRlyOFF-Del.	0.0	100.0	s	0.0	321	Relay/Digital output OFF-delay time after stop-command is given.

Drive Control Parameters — M1 → G1.4

Table 11-5: Drive Control Parameters — M1 → G1.4

Code	Parameter	Min.	Max.	Unit	Default	ID Number	Description
P1.4.1	Start Mode	0	1		0	401	**0** = Ramp **1** = Flying start
P1.4.2	Stop Mode	0	1		1	402	**0** = Coasting **1** = Ramp
P1.4.3	Brake Chopper	0	4		0	403	Brake Chopper Mode Selection. **0** = Brake NO, Test NO **1** = Brake YES(Run), Test YES (Ready+run) **2** = Brake chopper EXTERNAL, Test NO **3** = Brake YES(Ready+run), Test YES (Ready+run) **4** = Brake YES(Run), Test NO
P1.4.4	S-curve Time	0.0	10.0	s	0.0	404	Smooth ratio for S-curve

Prohibit Frequencies— M1 → G1.5

Table 11-6: Prohibit Frequencies — M1 → G1.5

Code	Parameter	Min.	Max.	Unit	Default	ID Number	Description
P1.5.1	SkipF1 Low Lim	0.0	100.0	%	0.0	501	Prohibit speed range 1 low limit.
P1.5.2	SkipF1 High Lim	Range_1_ Low_Lim	100.0	%	0.0	502	Prohibit speed range 1 high limit: **0** = No prohibit frequency range
P1.5.3	SkipF2 Low Lim	0.0	100.0	%	0.0	503	Prohibit speed range 2 low limit
P1.5.4	SkipF2 High Lim	Range_2_ Low_Lim	100.0	%	0.0	504	Prohibit speed range 2 high limit: **0** = No prohibit frequency range
P1.5.5	SkipF3 Low Lim	0.0	100.0	%	0.0	505	Prohibit speed range 3 low limit
P1.5.6	SkipF3 High Lim	Range_3_ Low_Lim	100.0	%	0.0	506	Prohibit speed range 3 high limit: **0** = No prohibit frequency range
P1.5.7	SkipF4 Low Lim	0.0	100.0	%	0.0	507	Prohibit speed range 4 low limit
P1.5.8	SkipF4 High Lim	Range_4_ Low_Lim	100.0	%	0.0	508	Prohibit speed range 4 high limit: **0** = No prohibit frequency range
P1.5.9	SkipF5 Low Lim	0.0	100.0	%	0.0	509	Prohibit speed range 5 low limit
P1.5.10	SkipF5 High Lim	Range_5_ Low_Lim	100.0	%	0.0	510	Prohibit speed range 5 high limit: **0** = No prohibit frequency range
P1.5.11	SkipF6 Low Lim	0.0	100.0	%	0.0	511	Prohibit speed range 6 low limit
P1.5.12	SkipF6 High Lim	Range_6_ Low_Lim	100.0	%	0.0	512	Prohibit speed range 6 high limit: **0** = No prohibit frequency range
P1.5.13	PH Acc/Dec Ramp	0.1	10.0	x	1.0	513	Acceleration/Deceleration time factor to pass prohibit speed window.

Motor Control Parameters — M1 → G1.6

Table 11-7: Motor Control Parameters — M1 → G1.6

Code	Parameter	Min.	Max.	Unit	Default	ID Number	Description
P1.6.1	Motor Ctrl Mode	0	1		0	601	Motor control mode: **0** = frequency control **1** = speed control
P1.6.2	V/Hz Optim.	0	1		0	602	V/F optimization selection: **0** = none **1** = automatic torque boost
P1.6.3	V/Hz Ratio	0	3		0	603	V/F ratio selection: **0** = linear **1** = squared **2** = programmable **3** = Linear with flux optim.
P1.6.4	Field WeakngPnt	8.00	320.00	Hz	60.00	604	Field weakening point.
P1.6.5	Voltage at FWP	10.00	200.00	%	100.00	605	Motor voltage (%*MotorNPVoltage) at field weakening point.
P1.6.6	V/Hz Mid Freq	0.00	Field Weakening Point	Hz	60.00	606	Programmable V/Hz curve middle point frequency.
P1.6.7	V/Hz Mid Voltg	0.00	100.00	%	100.00	607	Motor voltage (%*MotorNPVoltage) at programmable V/Hz curve middle point.
P1.6.8	Zero Freq Voltg	0.00	40.00	%	0.00	608	Motor voltage (%*MotorNPVoltage) at zero speed.
P1.6.9	Switching Freq	1.0	Switching FreqMax	kHz	3.6	609	Switching frequency in kHz. See **Appendix A**, **Table A-1**.
P1.6.10	Overvolt Contr	0	2		1	610	**0** = Off **1** = On with no ramping **2** = On with ramping
P1.6.11	Undervolt Contr	0	1		1	611	**0** = Off **1** = On
P1.6.12	Identification	0	2		0	612	Identification run. When this parameter is set greater than zero, then start command must be given within 20 seconds.

Protections — M1 → G1.7

Table 11-8: Protections — M1 → G1.7

Code	Parameter	Min.	Max.	Unit	Default	ID Number	Description
P1.7.1	Input Phase Supv	0	2		2	701	Response to input phase supervision. **0** = No Action **1** = Warning **2** = Fault
P1.7.2	4mA Fault Resp	0	2		0	702	Response to 4 mA signal supervision. **0** = No Action **1** = Warning **2** = Fault
P1.7.3	Ext. Fault Resp	0	2		2	703	Response to external fault digital input signal supervision. **0** = No Action **1** = Warning **2** = Fault
P1.7.4	FBComm. FaultResp	0	2		0	704	Response to fieldbus communication supervision. **0** = No Action **1** = Warning **2** = Fault
P1.7.5	SlotComFault Resp	0	2		0	705	Response to slot communication supervision. **0** = No Action **1** = Warning **2** = Fault
P1.7.6	Motor Therm Prot	0	3		0	707	**0** = No response **1** = Warning **2** = Fault, stop mode after fault according to ID402 **3** = Fault, stop mode after fault always by coasting
P1.7.7	MotAmbTemp Factor	-100.0	100.0	%	0.0	708	Percent of ambient temperature.
P1.7.8	MTP f0 Current	0.0	150.00	%	40.0	709	Percent of motor nameplate current.
P1.7.9	MTP Motor T	1	200	min	45	710	Time to reach 63% of final value.
P1.7.10	Motor Duty Cycle	0	100	%	100	711	Percent of nominal motor load
P1.7.11	Stall Protection	0	3		0	712	**0** = No response **1** = Warning **2** = Fault, stop mode after fault according to ID402 **3** = Fault, stop mode after fault always by coasting
P1.7.12	Stall Current	0.00	Motor CurrentMax	A	1.00	713	
P1.7.13	Stall Time Lim	1.00	120.00	s	15.00	714	
P1.7.14	Stall Freq Lim	1.00	Max_Freq	Hz	25.00	715	

Tables 11-8: Protections — M1 → G1.7, continued

Code	Parameter	Min.	Max.	Unit	Default	ID Number	Description
P1.7.15	Underload Protection	0	3		0	716	**0** = No response **1** = Warning **2** = Fault, stop mode after fault according to ID402 **3** = Fault, stop mode after fault always by coasting
P1.7.16	UP fnom Torque	10.0	150.00	%	50.0	717	Minimum torque allowed when above FWP.
P1.7.17	UP f0 Torque	5.0	150.00	%	10.0	718	Minimum torque allowed with zero frequency.
P1.7.18	UP Time Limit	2.00	600.00	s	20.00	719	
P1.7.19	Autom. Restart	0	3		0	706	Resets faults. See **Page 15-20**. **0** = Disabled **1** = Automatically transferred to Bypass **2** = Reset drive only **3** = Reset drive, if fails, transferred to Bypass
P1.7.20	Fire Mode Speed	0	100.0	%	100	804	When fire mode input is triggered, drive will run at fire mode speed.

Fieldbus Parameters — M1 → G1.8

Table 11-9: Fieldbus Parameters — M1 → G1.8

Code	Parameter	Min.	Max.	Unit	Default	ID Number	Description
P1.8.1	FB Data Out1 Sel	0	10000		1 ①	1001	Fieldbus process data output 1 selection. Default = Actual Speed
P1.8.2	FB Data Out2 Sel	0	10000		5 ①	1002	Fieldbus process data output 2 selection. Default = Motor Current
P1.8.3	FB Data Out3 Sel	0	10000		8 ①	1003	Fieldbus process data output 3 selection. Default = Motor Voltage
P1.8.4	FB Data Out4 Sel	0	10000		7 ①	1004	Fieldbus process data output 4 selection. Default = Motor Power
P1.8.5	FB Data Out5 Sel	0	10000		9 ①	1005	Fieldbus process data output 5 selection. Default = DC-Link Voltage

① ID number of parameter or variable to be sent over fieldbus. ID 1 – 20 are Monitoring values, Menu 7 (M7). See **Table 11-13**.

Table 11-9: Fieldbus Parameters — M1 → G1.8, continued

Code	Parameter	Min.	Max.	Unit	Default	ID Number	Description
P1.8.6	FB Data Out6 Sel	0	10000		20	1006	Fieldbus process data output 6 selection. Default = Application Status Word (Variable:ApplStatusWord) **b0** = Drive Ready **b1** = Run Enable **b2** = Drive Running **b3** = Drive Reversing **b4** = General Fault **b5** = General Warning **b6** = Preset Speed Active **b7** = Motor Regulator active **b8** = Output speed supervision indication **b9** = Setpoint speed supervision indication **b10** = HAND Control indication **b11** = AUTO Control indication **b12** = D-IN Firemode **b13** = Damper control signal **b14** = Bypass mode status indication **b15** = Bypass running
P1.8.7	FB Data Out7 Sel	0	10000		18 ①	1007	Fieldbus process data output 7 selection. Default = Active Fault Code
P1.8.8	FB Data Out8 Sel	0	10000		19 ①	1008	Fieldbus process data output 8 selection. Default = Active Warning Code

① ID number of parameter or variable to be sent over fieldbus. ID 1 – 20 are Monitoring values, Menu 7 (M7). See **Table 11-13**.

PI-Control Parameters — M1 → G1.9

Table 11-10: PI-Control Parameters — M1 → G1.9

Code	Parameter	Min.	Max.	Unit	Default	ID Number	Description
P1.9.1	US/Metric Units	0	1		0	1101	
P1.9.2	Setpoint Min.	Sensor_Min	PI_Setpoint_Max		(0)	1102	Minimum limit for the PI-Controller setpoint.
P1.9.3	Setpoint Max.	PI_Setpoint_Min	Sensor_Max		(2500)	1103	Maximum limit for the PI-Controller setpoint.
P1.9.4	PI-StPt Ramp Time	0.00	20.00	s	1.00	1104	Parameter for the PI-Setpoint ramp time. Default: 1.00s
P1.9.5	PI-Input Source	0	5		0	1106	PI-Controller Input Source Selection: Default #0 = (A) AI-1 **0** = (A) AI-1 **1** = (A) AI-2 **2** = Fieldbus, ProcessData1 **3** = Min. Both **4** = Max. Both **5** = Ave. Both
P1.9.6	Sensor Min.	(-10000)	Sensor_Max		(0)	1107	Actual Sensor minimum value at 0/4 mA.
P1.9.7	Sensor Max.	Sensor_Min	(10000)		(2500)	1108	Actual Sensor maximum value at 20 mA.
P1.9.8	PI-Contr. P-Gain	0.00	10.00		0.10	1109	P-Term (Gain) for the PI-controller.
P1.9.9	PI-Contr. I-Time	0.00	320.00	s	30.00	1110	I-Term (Integral Time) for the PI-controller.
P1.9.10	Deadband	(0)	(20000)		(0)	1111	Deadband area in units (Hysteresis to PI Setpoint)
P1.9.11	PI Acting Mode	0	1		1	1112	PI-controller acting mode. **0** = Reverse acting **1** = Forward acting
P1.9.12	Auto Accel. Time	0.1	3000.0	s	60.0	1113	Auto Mode Accel. Time
P1.9.13	Auto Decel. Time	0.1	3000.0	s	60.0	1114	Auto Mode Decel. Time
P1.9.14	Auto S-curve Time	0.0	10.0	s	0.0	1115	Auto Mode and PI-control is NOT active

Preset Speeds — M1 → G1.10

Table 11-11: Preset Speeds — M1 → G1.10

Code	Parameter	Min.	Max.	Unit	Step	Default	ID Number	Description
P1.10.1	Preset Speed 1	0	100.0	%	0.1	30.0	1701	Preset speeds when Digital Inputs are programmed
P1.10.2	Preset Speed 2	0	100.0	%	0.1	40.0	1702	
P1.10.3	Preset Speed 3	0	100.0	%	0.1	50.0	1703	
P1.10.4	Preset Speed 4	0	100.0	%	0.1	60.0	1704	
P1.10.5	Preset Speed 5	0	100.0	%	0.1	70.0	1705	
P1.10.6	Preset Speed 6	0	100.0	%	0.1	80.0	1706	
P1.10.7	Preset Speed 7	0	100.0	%	0.1	90.0	1707	

Keypad Control Parameters — M2

This menu provides the parameters for the setting of the keypad speed setpoint, the selection of motor direction when in keypad operation, and when the STOP button is active.

Table 11-12: Keypad Control Parameters — M2

Code	Parameter	Min.	Max.	Unit	Default	ID Number ①	Description
R2.1	Speed Setpoint	0.0	100.0	%	0.0		Keypad Speed Setpoint.
P2.2	Keypad Direction	0	1		0	1009	Reverse request active from the panel **0** = Forward **1** = Reverse
P2.3	StopButton Active	0	1		1	1010	Stop button (Keypad) always active (Yes/No)
R2.4	PI-Setpoint	(-10000)	(10000)		(1500)		Active PI reference if ID115 = 2.
P2.5	PI-Setpoint Default	(-10000)	(10000)			1011	PI-regulators default setpoint

① Keypad Control Parameter ID Numbers are listed separately on **Page 15-28**.

Menus — M3 to M6

Menus M3 to M6 provide information on the Active Faults, Fault History, System Menu settings and the Expander Board setup. These menu items are explained in detail in **Chapter 6**.

Monitoring Menu — M7

The monitored items are the actual values of parameters and signals as well as the status and measurements of other elements. Monitored items cannot be edited.

See **Chapter 6** — Menu information item M7, for more information.

Table 11-13: Monitoring Menu

Code	Parameter	Min.	Max.	Unit	Default	ID Number	Description
V7.1	Output Frequency	-320.00	320.00	Hz	0.00	2	Output frequency to the motor
V7.2	Actual Speed	-320.0	320.0	%	0.0	1	Output speed to the motor
V7.3	Speed Setpoint	-320.0	320.0	%	0.0	3	Monitored speed setpoint. This will show also the speed setpoint below the minimum frequency.
V7.4	Motor Speed	-10000	10000	rpm	0	4	Calculated motor speed in rpm
V7.5	Motor Current	0.0	Motor CurrentMax	A	0.0	5	
V7.6	Motor Torque	-300.0	300.0	%	0.0	6	[R] Motor torque as % value, +1000 equals +100.0 % pos = clockwise, neg = counterclockwise
V7.7	Motor Power	-300.0	300.0	%	0.0	7	
V7.8	Motor Voltage	0.0	1000.0	V	0.0	8	Measured motor voltage
V7.9	DC-Bus Voltage	0	1000	V	0	9	[R] DC voltage in Volts Tfilt = 32ms.
V7.10	Unit Temperature	-1000	1000	°F	0	10	Temperature of the heat sink
V7.11	Motor Temperature	0.0	1000.0	%	0.0	11	
V7.12	(A) AI-1	-10.00	20.00	V	0.00	12	Voltage Input value [V]
V7.13	(A) AI-2	-10.00	20.00	mA	0.00	13	Current Input value [mA]
V7.14	DI-1 DI-2 DI-3	0	7		0	14	DIA-1, DIA-2 and DIA-3 status
V7.15	DI-4 DI-5 DI-6	0	7		0	15	DIB-4, DIB-5 and DIB-6 status
V7.16	DO-1 RO-1 RO-2	0	7		0	16	DO-1, RO-1 and RO-2 status
V7.17	(A) AO-1	0.00	20.00	mA	0.00	17	
V7.18	ActFaultCode	0	200		0	18	Active Fault code.
V7.19	ActWarnCode	0	200		0	19	Active Warning code.

Table 11-13: Monitoring Menu, continued

Code	Parameter	Min.	Max.	Unit	Default	ID Number	Description
V7.20	Status Word	-32768	32767		0	20	**b0** = Drive Ready **b1** = Run Enable **b2** = Drive Running **b3** = Drive Reversing **b4** = General Fault **b5** = General Warning **b6** = Preset Speed Active **b7** = Motor Regulator active **b8** = Output speed supervision indication **b9** = Setpoint speed supervision indication **b10** = HAND Control indication **b11** = AUTO Control indication **b12** = D-IN Firemode **b13** = Damper control signal **b14** = Bypass mode status indication **b15** = Bypass running
V7.21	PI-Setpoint	(-10000)	(10000)	WC/ PA	(0)	21	
V7.22	PI-Input	(-10000)	(10000)		(0)	22	Actual Sensor Value
V7.23	PI-Error	(-10000)	(10000)		(0)	23	
V7.24	PI-Output	0.0	100.0	%	0.0	24	
V7.25 ①	RO-1 RO-2 RO-3	0	7		0	25	Monitoring the OPTB5 relay outputs.
G7.26	Multimonitor	—	—		—	—	Displays three monitor values simultaneously

① When OPTB5 is not installed in option slot C, this is not displayed.

Operate Menu — M8

The Operate Menu provides an easy to use method of viewing key numerical Monitoring Menu items. It also allows the setting of the keypad frequency reference. See **Chapter 6** for more information.

Chapter 12 — Building Static Application (SVCHS203)

Introduction

The Building Static Application is typically used to control fans with a pressure transducer and provide WC/PA units to a keypad.

The direct frequency reference can be used for the control without the PI controller and is selected from the analog inputs, fieldbus, motor potentiometer or keypad.

The Building Static Application is typically used to control Building pressure. In these applications, the Building Static Application provides a smooth control and an integrated measurement and control package where no additional components are needed.

- Digital inputs DI-2, DI-3 and DI-5 and all outputs are freely programmable.

Additional functions:

- Analog input signal range selection
- One frequency limit supervision
- Torque limit supervision
- Speed setpoint limit supervision
- Programmable start and stop functions
- DC Brake Chopper
- Six skip frequency areas
- Programmable V/Hz curve and switching frequency
- Auto restart
- Motor thermal and stall protection: Programmable action; off, warning, fault
- Motor underload protection
- Input and output phase supervision

Details of the parameters shown in this section are available in **Chapter 15** of this Manual, listed by parameter ID number.

Control Input/Output

Table 12-1: Building Static Application Default I/O Configuration

	Terminal	Signal		Description
	OPTA9			
	1	+10V DC_{ref}	Reference output	Voltage for potentiometer, etc.
0 to 10V DC (Factory Default)	2	AI-1+	Analog input, voltage range 0 – 10V DC	Voltage input for PI setpoint or feedback (Programmable)
	3	AI-1-	I/O Ground	Ground for reference and controls
4 to 20 mA (Factory Default)	4	AI-2+	Analog input, current range 0 – 20 mA	Current input for PI setpoint or feedback (Programmable)
	5	AI-2-		
	6	24V DC	Control voltage output	Voltage for switches, etc. max 0.1A
	7	GND	I/O ground	Ground for reference and controls
External Interlock Wiring	8	DI-1	Start/Stop Control	Contact closed = start
	9	DI-2	External fault input (programmable)	Contact closed = fault Contact open = no fault
	10	DI-3	External Interlock (programmable)	Contact closed = OK Open = Interlocked
	11	CMA	Common for DI-1 – DI-3	Connect to GND or 24V DC
	12	24V DC	Control voltage output	Voltage for switches (see terminal 6)
	13	GND	I/O ground	Ground for reference and controls
External Interlock Wiring	14	DI-4	Speed Select 1 (programmable)	Contact closed = Speed Select 1
	15	DI-5	Fire Mode (programmable)	Contact closed = Fire Mode active
	16	DI-6	Overload relay (IntelliPass) (programmable)	Contact open = no fault Contact closed = fault
	17	CMB	Common for DI-4 – DI-6	Connect to GND or 24V DC
0 to 20 mA (Factory Default)	18	AO-1+	Output frequency Analog output	Programmable Range 0 – 20 mA, R_L max. 500W
	19	AO-1		
	20	DO-1	Digital output READY	Programmable Open collector, I ≤ 50 mA, V ≤ 48V DC
Defaults:	**OPTA2**			
21-22 Opens on RUN	21	RO-1	Relay output 1	Programmable Drive RUN is default.
22-23 Closes on RUN	22	RO-1		
	23	RO-1		
24-25 Opens on FAULT	24	RO-2	Relay output 2	Programmable Drive FAULT is default.
25-26 Closes on FAULT	25	RO-2		
	26	RO-2		

Note: For more information on jumper selections, see **Chapter 4**.

X3 Jumper Setting — CMA and CMB Grounding

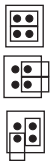

CMB Connected to Ground
CMA Connected to Ground

CMB Isolated from Ground
CMA Isolated from Ground

CMB and CMA Internally Connected and Isolated from Ground

⚠ CAUTION

Unattended start will occur if power is supplied with Start Command activated.

Parameter Lists

On the next pages you will find the lists of parameters within the respective parameter groups. The parameter descriptions are given by ID number in **Chapter 15**.

Column explanations:

Code	=	Location indication on the keypad; Shows the operator the present parameter number
Parameter	=	Name of parameter
Min.	=	Minimum value of parameter
Max.	=	Maximum value of parameter
Unit	=	Unit of parameter value; Given if available
Default	=	Value preset by factory
ID	=	ID number of the parameter for reference to **Chapter 15**

Quick Setup Parameters — M1 → G1.1

Table 12-2: Quick Setup Parameters — M1 → G1.1

Code	Parameter	Min.	Max.	Unit	Default	ID Number	Description
P1.1.1	Min Frequency	0.00	Max_ Frequency	Hz	12.00	101	Minimum output frequency, f[Hz].
P1.1.2	Max Frequency	FreqMin	320.00	Hz	60.00	102	Maximum output frequency, f[Hz].
P1.1.3	Acceleration Time	0.1	3000.0	s	60.0	103	Time from 0 Hz to maximum Hz.
P1.1.4	Deceleration Time	0.1	3000.0	s	60.0	104	Time from maximum Hz to 0 Hz.
P1.1.5	Motor NP Voltg	180	Motor VoltageMax	V	400	105	Motor nameplate voltage in Volts.
P1.1.6	Motor NP Freq	8.00	320.00	Hz	60.00	106	Motor nameplate frequency in Hertz.
P1.1.7	Motor Nom Speed	24	20000	rpm	1720	111	Motor nameplate speed in Rpm.
P1.1.8	Motor Nom Currnt	Motor CurrentMin	Motor CurrentMax	A	5.40	108	Motor nameplate current, I[A]
P1.1.9	Power Factor	0.30	1.00		0.85	109	Motor power factor. (Cos Phii)
P1.1.10	Service Factor	0.10	2.00		1.00	110	Motor service factor. This will calculate the motor current limit. (MotorNomCurrent x Service Factor)
P1.1.11	Current Limit	Motor CurrentMin	Motor CurrentMax	A	7.00	107	Output current limit of the unit in Amps.
P1.1.12	Start Srce Hand	1	3		1	112	Parameter for Local Start/Stop/ Reverse control location. Default = Keypad **1** = Keypad **2** = DI-1 Start **3** = I/O Three Wire

Table 12-2: Quick Setup Parameters — M1 → G1.1, continued

Code	Parameter	Min.	Max.	Unit	Default	ID Number	Description
P1.1.13	StPt Source Hand	0	3		2	113	Local speed setpoint selection: **0** = analog input AI-1 **1** = analog input AI-2 **2** = Speed Setpoint from Keypad **3** = Motor Potentiometer
P1.1.14	Start Srce Auto	1	4		2	114	Parameter for Remote Start/ Stop/Reverse control location. Default = DI-1 Start **1** = Keypad **2** = DI-1 Start **3** = I/O Three Wire **4** = Fieldbus
P1.1.15	StPt Source Auto	0	4		0	115	PI-setpoint selection: **0** = analog input AI-1 **1** = analog input AI-2 **2** = PI Setpoint from Keypad **3** = Motor Potentiometer **4** = PI Setpoint from Fieldbus
P1.1.16	PI-Input Source	0	2		0	1106	PI-Controller Input Source Selection: Default #0 = (A) AI-1 **0** = (A) AI-1 **1** = (A) AI-2 **2** = Fieldbus, Process Data 1 **3** = Min. Both **4** = Max. Both **5** = Ave. Both
P1.1.17	Sensor Min.	(-10000)	Sensor_Max		(-100)	1107	Actual Sensor minimum value at 0/4 mA.
P1.1.18	Sensor Max.	Sensor_Min	(10000)		(100)	1108	Actual Sensor maximum value at 20 mA.
P1.1.19	PI-Contr. P-Gain	0.00	10.00		0.10	1109	P-Term (Gain) for the PI-Controller
P1.1.20	PI-Contr. I-Time	0.00	320.00	s	30.00	1110	I-Term (Integral Time) for the PI-controller
P1.1.21	PI-Deadband	(0)	(20000)		(0)	1111	Deadband area in units. (Hysteresis to PI-Setpoint)
P1.1.22	AutoAccelTime	0.1	3000.0	s	60.0	1113	Acceleration time, when in AUTO mode
P1.1.23	AutoDecelTime	0.1	3000.0	s	60.0	1114	Deceleratin time, when in AUTO mode
P1.1.24	US/Metric Units	0	1		0	1101	

Input Signals — M1 → G1.2

Table 12-3: Input Signals — M1 → G1.2

Code	Parameter	Min.	Max.	Unit	Default	ID Number	Description
P1.2.1	Start Mode	0	3		1	201	Start Function: **0** = Normal start without interlockings. **1** = Interlocked start. One of the digital inputs must be programmed to Intlk/RunEna. DI-3 is defaulted for this feature. **2** = Mode 1 + timeout supervision. If the interlock is not OK within the interlock timeout time, start request is ignored and must be given again. **3** = Delayed start. Start request is given after delay time has expired.
P1.2.2	Intlk Stop Mode	0	1		1	216	**0** = Coasting **1** = Ramp
P1.2.3	Intlk Timeout	0.00	300.00	s	5.00	202	Interlock timeout time for Start Function #2. Default = 5s.
P1.2.4	Start Delay Time	0.00	300.00	s	5.00	203	Start delay time for Start Function #3. Default = 5s.
P1.2.5	(A) DI-2 Funct.	0	17		1	204	Default #1 External Fault Close **0** = Stop pulse, when 3-wire start/stop logic is selected. (False=Stop, True=Ready to Run) **1** = Ext. fault, closing contact **2** = External fault, opening contact **3** = Fault reset **4** = Run enable-Closed Contact **5** = Force ctrl. place to Hand **6** = Force ctrl. place to Auto **7** = Reverse **8** = Speed Select 1 **9** = Fire Mode-Closed Contact **10** = Speed Select 2 **11** = Speed Select 3 **12** = Force Bypass **13** = External interlock closed **14** = External interlock open **15** = Mot. Pot. UP **16** = Mot. Pot. DOWN **17** = Fire Mode-Open Contact

⚠ CAUTION

Unattended start will occur if power is supplied with Start Command activated.

Table 12-3: Input Signals — M1 → G1.2, continued

Code	Parameter	Min.	Max.	Unit	Default	ID Number	Description
P1.2.6	(A) DI-3 Funct.	0	17		13	205	Default #13 Interlock/Run Enable **0** = Not Used **1** = Ext. fault, closing contact **2** = External fault, opening contact **3** = Fault reset **4** = Run enable-Closed Contact **5** = Force ctrl. place to Hand **6** = Force ctrl. place to Auto **7** = Reverse **8** = Speed Select 1 **9** = Fire Mode-Closed Contact **10** = Speed Select 2 **11** = Speed Select 3 **12** = Force Bypass **13** = External interlock closed **14** = External interlock open **15** = Mot. Pot. UP **16** = Mot. Pot. DOWN **17** = Fire Mode-Open Contact
P1.2.7	(A) DI-4 Funct.	0	17		8	206	Default #8 Speed Select 1 **0** = Not Used **1** = Ext. fault, closing contact **2** = External fault, opening contact **3** = Fault reset **4** = Run enable-Closed Contact **5** = Force ctrl. place to Hand **6** = Force ctrl. place to Auto **7** = Reverse **8** = Speed Select 1 **9** = Fire Mode-Closed Contact **10** = Speed Select 2 **11** = Speed Select 3 **12** = Force Bypass **13** = External interlock closed **14** = External interlock open **15** = Mot. Pot. UP **16** = Mot. Pot. DOWN **17** = Fire Mode-Open Contact

Table 12-3: Input Signals — M1 → G1.2, continued

Code	Parameter	Min.	Max.	Unit	Default	ID Number	Description
P1.2.8	(A) DI-5 Funct.	0	17		9	207	Default #9 Fire-Mode **0** = Not Used **1** = Ext. fault, closing contact **2** = External fault, opening contact **3** = Fault reset **4** = Run enable-Closed Contact **5** = Force ctrl. place to Hand **6** = Force ctrl. place to Auto **7** = Reverse **8** = Speed Select 1 **9** = Fire Mode-Closed Contact **10** = Speed Select 2 **11** = Speed Select 3 **12** = Force Bypass **13** = External interlock closed **14** = External interlock open **15** = Mot. Pot. UP **16** = Mot. Pot. DOWN **17** = Fire Mode-Open Contact
P1.2.9	(A) DI-6 Funct.	0	17		0	208	Default #0 Overload Fault Relay-input **0** = Overload fault relay (Used in Intellipass) **1** = Ext. fault, closing contact **2** = External fault, opening contact **3** = Fault reset **4** = Run enable-Closed Contact **5** = Force ctrl. place to Hand **6** = Force ctrl. place to Auto **7** = Reverse **8** = Speed Select 1 **9** = Fire Mode-Closed Contact **10** = Speed Select 2 **11** = Speed Select 3 **12** = Force Bypass **13** = External interlock closed **14** = External interlock open **15** = Mot. Pot. UP **16** = Mot. Pot. DOWN **17** = Fire Mode-Open Contact
P1.2.10	(A) AI-1 Minimum	0.00	Max.	%	0.00	217	Default applies for 0V or 0 mA
P1.2.11	(A) AI-1 Maximum	Min.	100.0	%	100.00	218	Default applies for 10V or 20 mA
P1.2.12	(A) AI-1 Invert	0	1		0	209	**0** = Not inverted **1** = Inverted
P1.2.13	(A) AI-1 Filter	0.00	10.00	s	0.10	210	**0** = No filtering
P1.2.14	(A) AI-2 Minimum	0.00	Max.	%	20.00	219	Default applies for 2V or 4 mA
P1.2.15	(A) AI-2 Maximum	Min.	100.0	%	100.00	220	Default applies for 10V or 20 mA
P1.2.16	(A) AI-2 Invert	0	1		0	212	**0** = Not inverted **1** = Inverted
P1.2.17	(A) AI-2 Filter	0.00	10.00	s	0.10	213	**0** = No filtering
P1.2.18	StPt. Scale Min	0.0	100.0	%	0.0	214	Speed that corresponds to the minimum setpoint signal.

Table 12-3: Input Signals — M1 → G1.2, continued

Code	Parameter	Min.	Max.	Unit	Default	ID Number	Description
P1.2.19	StPt. Scale Max	0.0	100.0	%	0.0	215	Speed that corresponds to the maximum setpoint signal. 0.0%=NOT IN USE!
P1.2.20	MotPotStPt Memory	0	1		0	221	Parameter to select reset function for motor potentiometer speed setpoint. Default: No reset.

Output Signals — M1 → G1.3

Table 12-4: Output Signals — M1 → G1.3

Code	Parameter	Min.	Max.	Unit	Default	ID Number	Description
P1.3.1	(A) AO-1 Funct.	0	8		1	301	Analog output function: **0** = FB-Control (Fieldbus Passthrough, ProcessDataIN3) **1** = O/P frequency (0 - f max) **2** = Reference frequency (0 - f max) **3** = Motor speed (0 - 100% x Motor nom. speed) **4** = O/P current (0 - 100% x I nMot) **5** = Motor torque (0 - 100% x T nMot) **6** = Motor power (0 - 100% x P nMot) **7** = Motor voltage (0 - 100% x U nMot) **8** = DC-Bus Voltage (0 - 100% x U nMot)
P1.3.2	(A) AO-1 Filter	0.00	10.00	s	1.00	302	
P1.3.3	(A) AO-1 Invert	0	1		0	303	**0** = Not inverted **1** = Inverted
P1.3.4	(A) AO-1 Min.	0	1		0	304	**0** = 0 mA **1** = 4 mA
P1.3.5	(A) AO-1 Scale	10	1000	%	100	305	

Table 12-4: Output Signals — M1 ➔ G1.3, continued

Code	Parameter	Min.	Max.	Unit	Default	ID Number	Description
P1.3.6	(A) DO-1 Funct.	0	26		1	306	Default=Drive Ready **0** = Not used **1** = Drive Ready **2** = Drive Running **3** = General Fault **4** = General Fault inverted **5** = Drive overheat warning **6** = External fault or warning **7** = Reference (4mA) fault or warning **8** = General Warning **9** = Drive Reversing **10** = Preset Speed Active **11** = Speed setpoint=Actual Speed (=At speed) **12** = Motor regulator activated **13** = Actual Speed limit supervision **14** = Speed Setpoint limit supervision **15** = Torque limit supervision **16** = Timer On/Timer Off output control (Trigger is run request) **17** = Selections #16 inverted **18** = Frequency converter temperature limit supervision **19** = Unrequested rotation direction **20** = Thermistor fault / warning **21** = Hand Control Active **22** = Auto Control Active **23** = DI-Fire Mode Active **24** = Relay to energize an external element before starting the drive. **25** = FB-Control **26** = Bypass Run
P1.3.7	(B) RO-1 Funct.	0	25		2	307	Same as parameter 1.3.6.
P1.3.8	(B) RO-2 Funct.	0	25		3	308	Same as parameter 1.3.6
P1.3.9	(D) RO-1 Funct.	0	25		0	309	Same as parameter 1.3.6
P1.3.10	(D) RO-2 Funct.	0	25		0	310	Same as parameter 1.3.6
P1.3.11	(D) RO-3 Funct.	0	25		0	311	Same as parameter 1.3.6
P1.3.12	Sp.StPt Supv Fct	0	2		0	312	Speed Setpoint Supervision Function: **0** = Not used **1** = Low limit **2** = High limit
P1.3.13	Sp.StPt Supv Lim	0.0	100.0	%	0.0	313	Speed Setpoint Supervision Value.

Table 12-4: Output Signals — M1 → G1.3, continued

Code	Parameter	Min.	Max.	Unit	Default	ID Number	Description
P1.3.14	Act.Sp. Supv Fct	0	2		0	314	Actual Speed Supervision Function: **0** = Not used **1** = Low limit **2** = High limit
P1.3.15	Act.Sp. Supv Lim	0.0	100.0	%	0.0	315	Actual Speed Supervision Value. (±1.0% hysteresis)
P1.3.16	Torque Supv Fct	0	2		0	316	Torque Limit Supervision Function: **0** = Not used **1** = Low limit **2** = High limit
P1.3.17	Torque Supv Lim	0.0	300.0	%	0.0	317	Torque Limit Supervision Value
P1.3.18	TempLim Supv Fct	0	2		0	318	Temperature Limit Supervision Function: **0** = Not used **1** = Low limit **2** = High limit
P1.3.19	TempLim Supv Lim	-50	170	°F	104	319	Temperature Limit Supervision value
P1.3.20	StartRlyON-Del.	0.0	100.0	s	0.0	320	Relay/Digital output ON-delay time after start-command is given.
P1.3.21	StartRlyOFF-Del.	0.0	100.0	s	0.0	321	Relay/Digital output OFF-delay time after stop-command is given.

Drive Control Parameters — M1 → G1.4

Table 12-5: Drive Control Parameters — M1 → G1.4

Code	Parameter	Min.	Max.	Unit	Default	ID Number	Description
P1.4.1	Start Mode	0	1		0	401	**0** = Ramp **1** = Flying start
P1.4.2	Stop Mode	0	1		1	402	**0** = Coasting **1** = Ramp
P1.4.3	Brake Chopper	0	4		0	403	Brake Chopper Mode Selection. **0** = Brake NO, Test NO **1** = Brake YES(Run), Test YES (Ready+run) **2** = Brake chopper EXTERNAL, Test NO **3** = Brake YES(Ready+run), Test YES (Ready+run) **4** = Brake YES(Run), Test NO
P1.4.4	S-curve Time	0.0	10.0	s	0.0	404	Smooth ratio for S-curve

Prohibit Frequencies— M1 → G1.5

Table 12-6: Prohibit Frequencies — M1 → G1.5

Code	Parameter	Min.	Max.	Unit	Default	ID Number	Description
P1.5.1	SkipF1 Low Lim	0.0	100.0	%	0.0	501	Prohibit speed range 1 low limit.
P1.5.2	SkipF1 High Lim	Range_1_ Low_Lim	100.0	%	0.0	502	Prohibit speed range 1 high limit: **0** = No prohibit frequency range
P1.5.3	SkipF2 Low Lim	0.0	100.0	%	0.0	503	Prohibit speed range 2 low limit
P1.5.4	SkipF2 High Lim	Range_2_ Low_Lim	100.0	%	0.0	504	Prohibit speed range 2 high limit: **0** = No prohibit frequency range
P1.5.5	SkipF3 Low Lim	0.0	100.0	%	0.0	505	Prohibit speed range 3 low limit
P1.5.6	SkipF3 High Lim	Range_3_ Low_Lim	100.0	%	0.0	506	Prohibit speed range 3 high limit: **0** = No prohibit frequency range
P1.5.7	SkipF4 Low Lim	0.0	100.0	%	0.0	507	Prohibit speed range 4 low limit
P1.5.8	SkipF4 High Lim	Range_4_ Low_Lim	100.0	%	0.0	508	Prohibit speed range 4 high limit: **0** = No prohibit frequency range
P1.5.9	SkipF5 Low Lim	0.0	100.0	%	0.0	509	Prohibit speed range 5 low limit
P1.5.10	SkipF5 High Lim	Range_5_ Low_Lim	100.0	%	0.0	510	Prohibit speed range 5 high limit: **0** = No prohibit frequency range
P1.5.11	SkipF6 Low Lim	0.0	100.0	%	0.0	511	Prohibit speed range 6 low limit
P1.5.12	SkipF6 High Lim	Range_6_ Low_Lim	100.0	%	0.0	512	Prohibit speed range 6 high limit: **0** = No prohibit frequency range
P1.5.13	PH Acc/Dec Ramp	0.1	10.0	x	1.0	513	Acceleration/Deceleration time factor to pass prohibit speed window.

Motor Control Parameters — M1 → G1.6

Table 12-7: Motor Control Parameters — M1 → G1.6

Code	Parameter	Min.	Max.	Unit	Default	ID Number	Description
P1.6.1	Motor Ctrl Mode	0	1		0	601	Motor control mode: **0** = frequency control **1** = speed control
P1.6.2	V/Hz Optim.	0	1		0	602	V/F optimization selection: **0** = none **1** = automatic torque boost
P1.6.3	V/Hz Ratio	0	3		0	603	V/F ratio selection: **0** = linear **1** = squared **2** = programmable **3** = Linear with flux optim.
P1.6.4	Field WeakngPnt	8.00	320.00	Hz	60.00	604	Field weakening point.
P1.6.5	Voltage at FWP	10.00	200.00	%	100.00	605	Motor voltage (%*MotorNPVoltage) at field weakening point.
P1.6.6	V/Hz Mid Freq	0.00	Field Weakening Point	Hz	60.00	606	Programmable V/Hz curve middle point frequency.
P1.6.7	V/Hz Mid Voltg	0.00	100.00	%	100.00	607	Motor voltage (%*MotorNPVoltage) at programmable V/Hz curve middle point.
P1.6.8	Zero Freq Voltg	0.00	40.00	%	0.00	608	Motor voltage (%*MotorNPVoltage) at zero speed.
P1.6.9	Switching Freq	1.0	Switching FreqMax	kHz	3.6	609	Switching frequency in kHz. See **Appendix A**, **Table A-1**.
P1.6.10	Overvolt Contr	0	2		1	610	**0** = Off **1** = On with no ramping **2** = On with ramping
P1.6.11	Undervolt Contr	0	1		1	611	**0** = Off **1** = On
P1.6.12	Identification	0	2		0	612	Identification run. When this parameter is set greater than zero, then start command must be given within 20 seconds.

Protections — M1 → G1.7

Table 12-8: Protections — M1 → G1.7

Code	Parameter	Min.	Max.	Unit	Default	ID Number	Description
P1.7.1	Input Phase Supv	0	2		2	701	Response to input phase supervision. **0** = No Action **1** = Warning **2** = Fault
P1.7.2	4mA Fault Resp	0	2		0	702	Response to 4 mA signal supervision. **0** = No Action **1** = Warning **2** = Fault
P1.7.3	Ext. Fault Resp	0	2		2	703	Response to external fault digital input signal supervision. **0** = No Action **1** = Warning **2** = Fault
P1.7.4	FBComm. FaultResp	0	2		0	704	Response to fieldbus communication supervision. **0** = No Action **1** = Warning **2** = Fault
P1.7.5	SlotComFault Resp	0	2		0	705	Response to slot communication supervision. **0** = No Action **1** = Warning **2** = Fault
P1.7.6	Motor Therm Prot	0	3		0	707	**0** = No response **1** = Warning **2** = Fault, stop mode after fault according to ID402 **3** = Fault, stop mode after fault always by coasting
P1.7.7	MotAmbTemp Factor	-100.0	100.0	%	0.0	708	Percent of ambient temperature.
P1.7.8	MTP f0 Current	0.0	150.00	%	40.0	709	Percent of motor nameplate current.
P1.7.9	MTP Motor T	1	200	min	45	710	Time to reach 63% of final value.
P1.7.10	Motor Duty Cycle	0	100	%	100	711	Percent of nominal motor load
P1.7.11	Stall Protection	0	3		0	712	**0** = No response **1** = Warning **2** = Fault, stop mode after fault according to ID402 **3** = Fault, stop mode after fault always by coasting
P1.7.12	Stall Current	0.00	Motor CurrentMax	A	1.00	713	
P1.7.13	Stall Time Lim	1.00	120.00	s	15.00	714	
P1.7.14	Stall Freq Lim	1.00	Max_Freq	Hz	25.00	715	

Tables 12-8: Protections — M1 → G1.7, continued

Code	Parameter	Min.	Max.	Unit	Default	ID Number	Description
P1.7.15	Underload Protection	0	3		0	716	**0** = No response **1** = Warning **2** = Fault, stop mode after fault according to ID402 **3** = Fault, stop mode after fault always by coasting
P1.7.16	UP fnom Torque	10.0	150.00	%	50.0	717	Minimum torque allowed when above FWP.
P1.7.17	UP f0 Torque	5.0	150.00	%	10.0	718	Minimum torque allowed with zero frequency.
P1.7.18	UP Time Limit	2.00	600.00	s	20.00	719	
P1.7.19	Autom. Restart	0	3		0	706	Resets faults. See **Page 15-20**. **0** = Disabled **1** = Automatically transferred to Bypass **2** = Reset drive only **3** = Reset drive, if fails, transferred to Bypass
P1.7.20	Fire Mode Speed	0	100.0	%	100	804	When fire mode input is triggered, drive will run at fire mode speed.

Fieldbus Parameters — M1 → G1.8

Table 12-9: Fieldbus Parameters — M1 → G1.8

Code	Parameter	Min.	Max.	Unit	Default	ID Number	Description
P1.8.1	FB Data Out1 Sel	0	10000		1 ①	1001	Fieldbus process data output 1 selection. Default = Actual Speed
P1.8.2	FB Data Out2 Sel	0	10000		5 ①	1002	Fieldbus process data output 2 selection. Default = Motor Current
P1.8.3	FB Data Out3 Sel	0	10000		8 ①	1003	Fieldbus process data output 3 selection. Default = Motor Voltage
P1.8.4	FB Data Out4 Sel	0	10000		7 ①	1004	Fieldbus process data output 4 selection. Default = Motor Power
P1.8.5	FB Data Out5 Sel	0	10000		9 ①	1005	Fieldbus process data output 5 selection. Default = DC-Link Voltage

① ID number of parameter or variable to be sent over fieldbus. ID 1 – 20 are Monitoring values, Menu 7 (M7). See **Table 12-13**.

Table 12-9: Fieldbus Parameters — M1 → G1.8, continued

Code	Parameter	Min.	Max.	Unit	Default	ID Number	Description
P1.8.6	FB Data Out6 Sel	0	10000		20 ①	1006	Fieldbus process data output 6 selection. Default = Application Status Word (Variable:ApplStatusWord) **b0** = Drive Ready **b1** = Run Enable **b2** = Drive Running **b3** = Drive Reversing **b4** = General Fault **b5** = General Warning **b6** = Preset Speed Active **b7** = Motor Regulator active **b8** = Output speed supervision indication **b9** = Setpoint speed supervision indication **b10** = HAND Control indication **b11** = AUTO Control indication **b12** = D-IN Firemode **b13** = Damper control signal **b14** = Bypass mode status indication **b15** = Bypass running
P1.8.7	FB Data Out7 Sel	0	10000		18 ①	1007	Fieldbus process data output 7 selection. Default = Active Fault Code
P1.8.8	FB Data Out8 Sel	0	10000		19 ①	1008	Fieldbus process data output 8 selection. Default = Active Warning Code

① ID number of parameter or variable to be sent over fieldbus. ID 1 – 20 are Monitoring values, Menu 7 (M7). See **Table 12-13**.

PI-Control Parameters — M1 → G1.9

Table 12-10: PI-Control Parameters — M1 → G1.9

Code	Parameter	Min.	Max.	Unit	Default	ID Number	Description
P1.9.1	US/Metric Units	0	1		0	1101	
P1.9.2	Setpoint Min.	Sensor_Min	PI_Setpoint_Max		(-100)	1102	Minimum limit for the PI-Controller setpoint.
P1.9.3	Setpoint Max.	PI_Setpoint_Min	Sensor_Max		(100)	1103	Maximum limit for the PI-Controller setpoint.
P1.9.4	PI-StPt Ramp Time	0.00	20.00	s	1.00	1104	Parameter for the PI-Setpoint ramp time. Default: 1.00s
P1.9.5	PI-Input Source	0	5		0	1106	PI-Controller Input Source Selection: Default #0 = (A) AI-1 **0** = (A) AI-1 **1** = (A) AI-2 **2** = Fieldbus, ProcessData1 **3** = Min. Both **4** = Max. Both **5** = Ave. Both
P1.9.6	Sensor Min.	(-10000)	Sensor_Max		(-100)	1107	Actual Sensor minimum value at 0/4 mA.
P1.9.7	Sensor Max.	Sensor_Min	(10000)		(100)	1108	Actual Sensor maximum value at 20 mA.
P1.9.8	PI-Contr. P-Gain	0.00	10.00		0.10	1109	P-Term (Gain) for the PI-controller.
P1.9.9	PI-Contr. I-Time	0.00	320.00	s	30.00	1110	I-Term (Integral Time) for the PI-controller.
P1.9.10	PI Deadband	(0)	(20000)		(0)	1111	Deadband area in units. (Hysteresis to PI Setpoint)
P1.9.11	PI Acting Mode	0	1		1	1112	PI-controller acting mode. **0** = Reverse acting **1** = Forward acting
P1.9.12	Auto Accel. Time	0.1	3000.0	s	60.0	1113	Auto Mode Accel. Time
P1.9.13	Auto Decel. Time	0.1	3000.0	s	60.0	1114	Auto Mode Decel. Time
P1.9.14	Auto S-curve Time	0.0	10.0	s	0.0	1115	Auto Mode and PI-control is NOT active

Preset Speeds — M1 → G1.10

Table 12-11: Preset Speeds — M1 → G1.10

Code	Parameter	Min.	Max.	Unit	Step	Default	ID Number	Description
P1.10.1	Preset Speed 1	0	100.0	%	0.1	30.0	1701	Preset speeds when Digital Inputs are programmed
P1.10.2	Preset Speed 2	0	100.0	%	0.1	40.0	1702	
P1.10.3	Preset Speed 3	0	100.0	%	0.1	50.0	1703	
P1.10.4	Preset Speed 4	0	100.0	%	0.1	60.0	1704	
P1.10.5	Preset Speed 5	0	100.0	%	0.1	70.0	1705	
P1.10.6	Preset Speed 6	0	100.0	%	0.1	80.0	1706	
P1.10.7	Preset Speed 7	0	100.0	%	0.1	90.0	1707	

Keypad Control Parameters — M2

This menu provides the parameters for the setting of the keypad speed setpoint, the selection of motor direction when in keypad operation, and when the STOP button is active.

Table 12-12: Keypad Control Parameters — M2

Code	Parameter	Min.	Max.	Unit	Default	ID Number ①	Description
R2.1	Speed Setpoint	0.0	100.0	%	0.0		Keypad Speed Setpoint.
P2.2	Keypad Direction	0	1		0	1009	Reverse request active from the panel **0** = Forward **1** = Reverse
P2.3	StopButton Active	0	1		1	1010	Stop button (Keypad) always active (Yes/No)
R2.4	PI-Setpoint	(-10000)	(10000)		(30)		
P2.5	PI-Setpoint Default	(-10000)	(10000)			1011	PI-regulators default setpoint

① Keypad Control Parameter ID Numbers are listed separately on **Page 15-28**.

Menus — M3 to M6

Menus M3 to M6 provide information on the Active Faults, Fault History, System Menu settings and the Expander Board setup. These menu items are explained in detail in **Chapter 6**.

Monitoring Menu — M7

The monitored items are the actual values of parameters and signals as well as the status and measurements of other elements. Monitored items cannot be edited.

See **Chapter 6** — Menu information item M7, for more information.

Table 12-13: Monitoring Menu

Code	Parameter	Min.	Max.	Unit	Default	ID Number	Description
V7.1	Output Frequency	-320.00	320.00	Hz	0.00	2	Output frequency to the motor
V7.2	Actual Speed	-320.0	320.0	%	0.0	1	Output speed to the motor
V7.3	Speed Setpoint	-320.0	320.0	%	0.0	3	Monitored speed setpoint. This will show also the speed setpoint below the minimum frequency.
V7.4	Motor Speed	-10000	10000	rpm	0	4	Calculated motor speed in rpm
V7.5	Motor Current	0.0	Motor CurrentMax	A	0.0	5	
V7.6	Motor Torque	-300.0	300.0	%	0.0	6	[R] Motor torque as % value, +1000 equals +100.0 % pos = clockwise, neg = counterclockwise
V7.7	Motor Power	-300.0	300.0	%	0.0	7	
V7.8	Motor Voltage	0.0	1000.0	V	0.0	8	Measured motor voltage
V7.9	DC-Bus Voltage	0	1000	V	0	9	[R] DC voltage in Volts Tfilt = 32ms.
V7.10	Unit Temperature	-1000	1000	°F	0	10	Temperature of the heat sink
V7.11	Motor Temperature	0.0	1000.0	%	0.0	11	
V7.12	(A) AI-1	-10.00	20.00	V	0.00	12	Voltage Input value [V]
V7.13	(A) AI-2	-10.00	20.00	mA	0.00	13	Current Input value [mA]
V7.14	DI-1 DI-2 DI-3	0	7		0	14	DIA-1, DIA-2 and DIA-3 status
V7.15	DI-4 DI-5 DI-6	0	7		0	15	DIB-4, DIB-5 and DIB-6 status
V7.16	DO-1 RO-1 RO-2	0	7		0	16	DO-1, RO-1 and RO-2 status
V7.17	(A) AO-1	0.00	20.00	mA	0.00	17	
V7.18	ActFaultCode	0	200		0	18	Active Fault code.
V7.19	ActWarnCode	0	200		0	19	Active Warning code.

Table 12-13: Monitoring Menu, continued

Code	Parameter	Min.	Max.	Unit	Default	ID Number	Description
V7.20	Status Word	-32768	32767		0	20	**b0** = Drive Ready **b1** = Run Enable **b2** = Drive Running **b3** = Drive Reversing **b4** = General Fault **b5** = General Warning **b6** = Preset Speed Active **b7** = Motor Regulator active **b8** = Output speed supervision indication **b9** = Setpoint speed supervision indication **b10** = HAND Control indication **b11** = AUTO Control indication **b12** = D-IN Firemode **b13** = Damper control signal **b14** = Bypass mode status indication **b15** = Bypass running
V7.21	PI-Setpoint	(-10000)	(10000)	WC/ PA	(0)	21	
V7.22	PI-Input	(-10000)	(10000)		(0)	22	Actual Sensor Value
V7.23	PI-Error	(-10000)	(10000)		(0)	23	
V7.24	PI-Output	0.0	100.0	%	0.0	24	
V7.25	RO-1 RO-2 RO-3	0	7		0	25	Monitoring the OPTB5 relay outputs.
G7.26	Multimonitor	—	—		—	—	Displays three monitor values simultaneously

Operate Menu — M8

The Operate Menu provides an easy to use method of viewing key numerical Monitoring Menu items. It also allows the setting of the keypad frequency reference. See **Chapter 6** for more information.

Chapter 13 — Pressure Control Application (SVCHS204)

Introduction

The Pressure Control Application is typically used to control levels of pumps in fans with a pressure transducer and provide PSI/kPa units to a keypad.

The direct frequency reference can be used for the control without the PI controller and is selected from the analog inputs, fieldbus, motor potentiometer or keypad.

The Pressure Control Application is typically used to control Pressure pumps. In these applications, the Pressure Control Application provides a smooth control and an integrated measurement and control package where no additional components are needed.

- Digital inputs DI-2, DI-3 and DI-5 and all outputs are freely programmable.

Additional functions:

- Analog input signal range selection
- One frequency limit supervision
- Torque limit supervision
- Speed setpoint limit supervision
- Programmable start and stop functions
- DC Brake Chopper
- Six skip frequency areas
- Programmable V/Hz curve and switching frequency
- Auto restart
- Motor thermal and stall protection: Programmable action; off, warning, fault
- Motor underload protection
- Input and output phase supervision

Details of the parameters shown in this section are available in **Chapter 15** of this Manual, listed by parameter ID number.

Control Input/Output

Table 13-1: Pressure Control Application Default I/O Configuration

	Terminal	Signal		Description
	OPTA9			
	1	+10V DC_{ref}	Reference output	Voltage for potentiometer, etc.
0 to 10V DC (Factory Default)	2	AI-1+	Analog input, voltage range 0 – 10V DC	Voltage input for PI setpoint or feedback (Programmable)
	3	AI-1-	I/O Ground	Ground for reference and controls
4 to 20 mA (Factory Default)	4	AI-2+	Analog input, current range 0 – 20 mA	Current input for PI setpoint or feedback (Programmable)
	5	AI-2-		
	6	24V DC	Control voltage output	Voltage for switches, etc. max 0.1A
	7	GND	I/O ground	Ground for reference and controls
External Interlock Wiring	8	DI-1	Start/Stop Control	Contact closed = start
	9	DI-2	External fault input (programmable)	Contact closed = fault Contact open = no fault
	10	DI-3	External Interlock (programmable)	Contact closed = OK Open = Interlocked
	11	CMA	Common for DI-1 – DI-3	Connect to GND or 24V DC
	12	24V DC	Control voltage output	Voltage for switches (see terminal 6)
	13	GND	I/O ground	Ground for reference and controls
External Interlock Wiring	14	DI-4	Speed Select 1 (programmable)	Contact closed = Speed Select 1
	15	DI-5	Fire Mode (programmable)	Contact closed = Fire Mode active
	16	DI-6	Overload relay (IntelliPass) (programmable)	Contact open = no fault Contact closed = fault
	17	CMB	Common for DI-4 – DI-6	Connect to GND or 24V DC
0 to 20 mA (Factory Default)	18	AO-1+	Output frequency Analog output	Programmable Range 0 – 20 mA, R_L max. 500W
	19	AO-1		
	20	DO-1	Digital output READY	Programmable Open collector, I ≤ 50 mA, V ≤ 48V DC
Defaults:	**OPTA2**			
21-22 Opens on RUN	21	RO-1	Relay output 1	Programmable Drive RUN is default.
22-23 Closes on RUN	22	RO-1		
	23	RO-1		
24-25 Opens on FAULT	24	RO-2	Relay output 2	Programmable Drive FAULT is default.
25-26 Closes on FAULT	25	RO-2		
	26	RO-2		

Note: For more information on jumper selections, see **Chapter 4**.

X3 Jumper Setting — CMA and CMB Grounding

CMB Connected to Ground
CMA Connected to Ground

CMB Isolated from Ground
CMA Isolated from Ground

CMB and CMA Internally Connected and Isolated from Ground

CAUTION

Unattended start will occur if power is supplied with Start Command activated.

Parameter Lists

On the next pages you will find the lists of parameters within the respective parameter groups. The parameter descriptions are given by ID number in **Chapter 15**.

Column explanations:

Code	=	Location indication on the keypad; Shows the operator the present parameter number
Parameter	=	Name of parameter
Min.	=	Minimum value of parameter
Max.	=	Maximum value of parameter
Unit	=	Unit of parameter value; Given if available
Default	=	Value preset by factory
ID	=	ID number of the parameter for reference to **Chapter 15**

Quick Setup Parameters — M1 → G1.1

Table 13-2: Quick Setup Parameters — M1 → G1.1

Code	Parameter	Min.	Max.	Unit	Default	ID Number	Description
P1.1.1	Min Frequency	0.00	Max_ Frequency	Hz	12.00	101	Minimum output frequency, f[Hz].
P1.1.2	Max Frequency	FreqMin	320.00	Hz	60.00	102	Maximum output frequency, f[Hz].
P1.1.3	Acceleration Time	0.1	3000.0	s	60.0	103	Time from 0 Hz to maximum Hz.
P1.1.4	Deceleration Time	0.1	3000.0	s	60.0	104	Time from maximum Hz to 0 Hz.
P1.1.5	Motor NP Voltg	180	Motor VoltageMax	V	400	105	Motor nameplate voltage in Volts.
P1.1.6	Motor NP Freq	8.00	320.00	Hz	60.00	106	Motor nameplate frequency in Hertz.
P1.1.7	Motor Nom Speed	24	20000	rpm	1720	111	Motor nameplate speed in Rpm.
P1.1.8	Motor Nom Currnt	Motor CurrentMin	Motor CurrentMax	A	5.40	108	Motor nameplate current, I[A]
P1.1.9	Power Factor	0.30	1.00		0.85	109	Motor power factor. (Cos Phii)
P1.1.10	Service Factor	0.10	2.00		1.00	110	Motor service factor. This will calculate the motor current limit. (MotorNomCurrent x Service Factor)
P1.1.11	Current Limit	Motor CurrentMin	Motor CurrentMax	A	7.00	107	Output current limit of the unit in Amps.
P1.1.12	Start Srce Hand	1	3		1	112	Parameter for Local Start/Stop/ Reverse control location. Default = Keypad **1** = Keypad **2** = DI-1 Start **3** = I/O Three Wire

Table 13-2: Quick Setup Parameters — M1 → G1.1, continued

Code	Parameter	Min.	Max.	Unit	Default	ID Number	Description
P1.1.13	StPt Source Hand	0	3		2	113	Local speed setpoint selection: **0** = analog input AI-1 **1** = analog input AI-2 **2** = Speed Setpoint from Keypad **3** = Motor Potentiometer
P1.1.14	Start Srce Auto	1	4		2	114	Parameter for Remote Start/ Stop/Reverse control location. Default = DI-1 Start **1** = Keypad **2** = DI-1 Start **3** = I/O Three Wire **4** = Fieldbus
P1.1.15	StPt Source Auto	0	4		0	115	PI-setpoint selection: **0** = analog input AI-1 **1** = analog input AI-2 **2** = PI Setpoint from Keypad **3** = Motor Potentiometer **4** = PI Setpoint from Fieldbus
P1.1.16	PI-Input Source	0	2		0	1106	PI-Controller Input Source Selection: Default #0 = (A) AI-1 **0** = (A) AI-1 **1** = (A) AI-2 **2** = Fieldbus, Process Data 1 **3** = Min. Both **4** = Max. Both **5** = Ave. Both
P1.1.17	Sensor Min.	(-10000)	Sensor_Max		(0)	1107	Actual Sensor minimum value at 0/4 mA.
P1.1.18	Sensor Max.	Sensor_Min	(10000)		(500)	1108	Actual Sensor maximum value at 20 mA.
P1.1.19	PI-Contr. P-Gain	0.00	10.00		0.10	1109	P-Term (Gain) for the PI-Controller
P1.1.20	PI-Contr. I-Time	0.00	320.00	s	30.00	1110	I-Term (Integral Time) for the PI-controller
P1.1.21	PI-Deadband	(0)	(20000)		(0)	1111	Deadband area in units. (Hysteresis to PI-Setpoint)
P1.1.22	AutoAccelTime	0.1	3000.0	s	60.0	1113	Acceleration time, when in AUTO mode
P1.1.23	AutoDecelTime	0.1	3000.0	s	60.0	1114	Deceleratin time, when in AUTO mode
P1.1.24	US/Metric Units	0	1		0	1101	

Input Signals — M1 → G1.2

Table 13-3: Input Signals — M1 → G1.2

Code	Parameter	Min.	Max.	Unit	Default	ID Number	Description
P1.2.1	Start Mode	0	3		1	201	Start Function: **0** = Normal start without interlockings. **1** = Interlocked start. One of the digital inputs must be programmed to Intlk/RunEna. DI-3 is defaulted for this feature. **2** = Mode 1 + timeout supervision. If the interlock is not OK within the interlock timeout time, start request is ignored and must be given again. **3** = Delayed start. Start request is given after delay time has expired.
P1.2.2	Intlk Stop Mode	0	1		1	216	**0** = Coasting **1** = Ramp
P1.2.3	Intlk Timeout	0.00	300.00	s	5.00	202	Interlock timeout time for Start Function #2. Default = 5s.
P1.2.4	Start Delay Time	0.00	300.00	s	5.00	203	Start delay time for Start Function #3. Default = 5s.
P1.2.5	(A) DI-2 Funct.	0	17		1	204	Default #1 External Fault Close **0** = Stop pulse, when 3-wire start/stop logic is selected. (False=Stop, True=Ready to Run) **1** = Ext. fault, closing contact **2** = External fault, opening contact **3** = Fault reset **4** = Run enable-Closed Contact **5** = Force ctrl. place to Hand **6** = Force ctrl. place to Auto **7** = Reverse **8** = Speed Select 1 **9** = Fire Mode-Closed Contact **10** = Speed Select 2 **11** = Speed Select 3 **12** = Force Bypass **13** = External interlock closed **14** = External interlock open **15** = Mot. Pot. UP **16** = Mot. Pot. DOWN **17** = Fire Mode-Open Contact

⚠ CAUTION

Unattended start will occur if power is supplied with Start Command activated.

Table 13-3: Input Signals — M1 → G1.2, continued

Code	Parameter	Min.	Max.	Unit	Default	ID Number	Description
P1.2.6	(A) DI-3 Funct.	0	17		13	205	Default #13 Interlock/Run Enable **0** = Not Used **1** = Ext. fault, closing contact **2** = External fault, opening contact **3** = Fault reset **4** = Run enable-Closed Contact **5** = Force ctrl. place to Hand **6** = Force ctrl. place to Auto **7** = Reverse **8** = Speed Select 1 **9** = Fire Mode-Closed Contact **10** = Speed Select 2 **11** = Speed Select 3 **12** = Force Bypass **13** = External interlock closed **14** = External interlock open **15** = Mot. Pot. UP **16** = Mot. Pot. DOWN **17** = Fire Mode-Open Contact
P1.2.7	(A) DI-4 Funct.	0	17		8	206	Default #8 Speed Select 1 **0** = Not Used **1** = Ext. fault, closing contact **2** = External fault, opening contact **3** = Fault reset **4** = Run enable-Closed Contact **5** = Force ctrl. place to Hand **6** = Force ctrl. place to Auto **7** = Reverse **8** = Speed Select 1 **9** = Fire Mode-Closed Contact **10** = Speed Select 2 **11** = Speed Select 3 **12** = Force Bypass **13** = External interlock closed **14** = External interlock open **15** = Mot. Pot. UP **16** = Mot. Pot. DOWN **17** = Fire Mode-Open Contact

Table 13-3: Input Signals — M1 → G1.2, continued

Code	Parameter	Min.	Max.	Unit	Default	ID Number	Description
P1.2.8	(A) DI-5 Funct.	0	17		9	207	Default #9 Fire-Mode **0** = Not Used **1** = Ext. fault, closing contact **2** = External fault, opening contact **3** = Fault reset **4** = Run enable-Closed Contact **5** = Force ctrl. place to Hand **6** = Force ctrl. place to Auto **7** = Reverse **8** = Speed Select 1 **9** = Fire Mode-Closed Contact **10** = Speed Select 2 **11** = Speed Select 3 **12** = Force Bypass **13** = External interlock closed **14** = External interlock open **15** = Mot. Pot. UP **16** = Mot. Pot. DOWN **17** = Fire Mode-Open Contact
P1.2.9	(A) DI-6 Funct.	0	17		0	208	Default #0 Overload Fault Relay-input **0** = Overload fault relay (Used in Intellipass) **1** = Ext. fault, closing contact **2** = External fault, opening contact **3** = Fault reset **4** = Run enable-Closed Contact **5** = Force ctrl. place to Hand **6** = Force ctrl. place to Auto **7** = Reverse **8** = Speed Select 1 **9** = Fire Mode-Closed Contact **10** = Speed Select 2 **11** = Speed Select 3 **12** = Force Bypass **13** = External interlock closed **14** = External interlock open **15** = Mot. Pot. UP **16** = Mot. Pot. DOWN **17** = Fire Mode-Open Contact
P1.2.10	(A) AI-1 Minimum	0.00	Max.	%	0.00	217	Default applies for 0V or 0 mA
P1.2.11	(A) AI-1 Maximum	Min.	100.0	%	100.00	218	Default applies for 10V or 20 mA
P1.2.12	(A) AI-1 Invert	0	1		0	209	**0** = Not inverted **1** = Inverted
P1.2.13	(A) AI-1 Filter	0.00	10.00	s	0.10	210	**0** = No filtering
P1.2.14	(A) AI-2 Minimum	0.00	Max.	%	20.00	219	Default applies for 2V or 4 mA
P1.2.15	(A) AI-2 Maximum	Min.	100.0	%	100.00	220	Default applies for 10V or 20 mA
P1.2.16	(A) AI-2 Invert	0	1		0	212	**0** = Not inverted **1** = Inverted
P1.2.17	(A) AI-2 Filter	0.00	10.00	s	0.10	213	**0** = No filtering
P1.2.18	StPt. Scale Min	0.0	100.0	%	0.0	214	Speed that corresponds to the minimum setpoint signal.

Table 13-3: Input Signals — M1 → G1.2, continued

Code	Parameter	Min.	Max.	Unit	Default	ID Number	Description
P1.2.19	StPt. Scale Max	0.0	100.0	%	0.0	215	Speed that corresponds to the maximum setpoint signal. 0.0%=NOT IN USE!
P1.2.20	MotPotStPt Memory	0	1		0	221	Parameter to select reset function for motor potentiometer speed setpoint. Default: No reset.

Output Signals — M1 → G1.3

Table 13-4: Output Signals — M1 → G1.3

Code	Parameter	Min.	Max.	Unit	Default	ID Number	Description
P1.3.1	(A) AO-1 Funct.	0	8		1	301	Analog output function: **0** = FB-Control (Fieldbus Passthrough, ProcessDataIN3) **1** = O/P frequency (0 - f max) **2** = Reference frequency (0 - f max) **3** = Motor speed (0 - 100% x Motor nom. speed) **4** = O/P current (0 - 100% x I nMot) **5** = Motor torque (0 - 100% x T nMot) **6** = Motor power (0 - 100% x P nMot) **7** = Motor voltage (0 - 100% x U nMot) **8** = DC-Bus Voltage (0 - 100% x U nMot)
P1.3.2	(A) AO-1 Filter	0.00	10.00	s	1.00	302	
P1.3.3	(A) AO-1 Invert	0	1		0	303	**0** = Not inverted **1** = Inverted
P1.3.4	(A) AO-1 Min.	0	1		0	304	**0** = 0 mA **1** = 4 mA
P1.3.5	(A) AO-1 Scale	10	1000	%	100	305	

Table 13-4: Output Signals — M1 ➔ G1.3, continued

Code	Parameter	Min.	Max.	Unit	Default	ID Number	Description
P1.3.6	(A) DO-1 Funct.	0	26		1	306	Default=Drive Ready **0** = Not used **1** = Drive Ready **2** = Drive Running **3** = General Fault **4** = General Fault inverted **5** = Drive overheat warning **6** = External fault or warning **7** = Reference (4mA) fault or warning **8** = General Warning **9** = Drive Reversing **10** = Preset Speed Active **11** = Speed setpoint=Actual Speed (=At speed) **12** = Motor regulator activated **13** = Actual Speed limit supervision **14** = Speed Setpoint limit supervision **15** = Torque limit supervision **16** = Timer On/Timer Off output control (Trigger is run request) **17** = Selections #16 inverted **18** = Frequency converter temperature limit supervision **19** = Unrequested rotation direction **20** = Thermistor fault / warning **21** = Hand Control Active **22** = Auto Control Active **23** = DI-Fire Mode Active **24** = Relay to energize an external element before starting the drive. **25** = FB-Control **26** = Bypass Run
P1.3.7	(B) RO-1 Funct.	0	24		2	307	Same as parameter 1.3.6.
P1.3.8	(B) RO-2 Funct.	0	24		3	308	Same as parameter 1.3.6
P1.3.9	(D) RO-1 Funct.	0	24		0	309	Same as parameter 1.3.6
P1.3.10	(D) RO-2 Funct.	0	24		0	310	Same as parameter 1.3.6
P1.3.11	(D) RO-3 Funct.	0	24		0	311	Same as parameter 1.3.6
P1.3.12	Sp.StPt Supv Fct	0	2		0	312	Speed Setpoint Supervision Function: **0** = Not used **1** = Low limit **2** = High limit
P1.3.13	Sp.StPt Supv Lim	0.0	100.0	%	0.0	313	Speed Setpoint Supervision Value.

Table 13-4: Output Signals — M1 → G1.3, continued

Code	Parameter	Min.	Max.	Unit	Default	ID Number	Description
P1.3.14	Act.Sp. Supv Fct	0	2		0	314	Actual Speed Supervision Function: **0** = Not used **1** = Low limit **2** = High limit
P1.3.15	Act.Sp. Supv Lim	0.0	100.0	%	0.0	315	Actual Speed Supervision Value. (±1.0% hysteresis)
P1.3.16	Torque Supv Fct	0	2		0	316	Torque Limit Supervision Function: **0** = Not used **1** = Low limit **2** = High limit
P1.3.17	Torque Supv Lim	0.0	300.0	%	0.0	317	Torque Limit Supervision Value
P1.3.18	TempLim Supv Fct	0	2		0	318	Temperature Limit Supervision Function: **0** = Not used **1** = Low limit **2** = High limit
P1.3.19	TempLim Supv Lim	-50	170	°F	104	319	Temperature Limit Supervision value
P1.3.20	StartRlyON-Del.	0.0	100.0	s	0.0	320	Relay/Digital output ON-delay time after start-command is given.
P1.3.21	StartRlyOFF-Del.	0.0	100.0	s	0.0	321	Relay/Digital output OFF-delay time after stop-command is given.

Drive Control Parameters — M1 → G1.4

Table 13-5: Drive Control Parameters — M1 → G1.4

Code	Parameter	Min.	Max.	Unit	Default	ID Number	Description
P1.4.1	Start Mode	0	1		0	401	**0** = Ramp **1** = Flying start
P1.4.2	Stop Mode	0	1		1	402	**0** = Coasting **1** = Ramp
P1.4.3	Brake Chopper	0	4		0	403	Brake Chopper Mode Selection. **0** = Brake NO, Test NO **1** = Brake YES(Run), Test YES (Ready+run) **2** = Brake chopper EXTERNAL, Test NO **3** = Brake YES(Ready+run), Test YES (Ready+run) **4** = Brake YES(Run), Test NO
P1.4.4	S-curve Time	0.0	10.0	s	0.0	404	Smooth ratio for S-curve

Prohibit Frequencies— M1 → G1.5

Table 13-6: Prohibit Frequencies — M1 → G1.5

Code	Parameter	Min.	Max.	Unit	Default	ID Number	Description
P1.5.1	SkipF1 Low Lim	0.0	100.0	%	0.0	501	Prohibit speed range 1 low limit.
P1.5.2	SkipF1 High Lim	Range_1_ Low_Lim	100.0	%	0.0	502	Prohibit speed range 1 high limit: **0** = No prohibit frequency range
P1.5.3	SkipF2 Low Lim	0.0	100.0	%	0.0	503	Prohibit speed range 2 low limit
P1.5.4	SkipF2 High Lim	Range_2_ Low_Lim	100.0	%	0.0	504	Prohibit speed range 2 high limit: **0** = No prohibit frequency range
P1.5.5	SkipF3 Low Lim	0.0	100.0	%	0.0	505	Prohibit speed range 3 low limit
P1.5.6	SkipF3 High Lim	Range_3_ Low_Lim	100.0	%	0.0	506	Prohibit speed range 3 high limit: **0** = No prohibit frequency range
P1.5.7	SkipF4 Low Lim	0.0	100.0	%	0.0	507	Prohibit speed range 4 low limit
P1.5.8	SkipF4 High Lim	Range_4_ Low_Lim	100.0	%	0.0	508	Prohibit speed range 4 high limit: **0** = No prohibit frequency range
P1.5.9	SkipF5 Low Lim	0.0	100.0	%	0.0	509	Prohibit speed range 5 low limit
P1.5.10	SkipF5 High Lim	Range_5_ Low_Lim	100.0	%	0.0	510	Prohibit speed range 5 high limit: **0** = No prohibit frequency range
P1.5.11	SkipF6 Low Lim	0.0	100.0	%	0.0	511	Prohibit speed range 6 low limit
P1.5.12	SkipF6 High Lim	Range_6_ Low_Lim	100.0	%	0.0	512	Prohibit speed range 6 high limit: **0** = No prohibit frequency range
P1.5.13	PH Acc/Dec Ramp	0.1	10.0	x	1.0	513	Acceleration/Deceleration time factor to pass prohibit speed window.

Motor Control Parameters — M1 → G1.6

Table 13-7: Motor Control Parameters — M1 → G1.6

Code	Parameter	Min.	Max.	Unit	Default	ID Number	Description
P1.6.1	Motor Ctrl Mode	0	1		0	601	Motor control mode: **0** = frequency control **1** = speed control
P1.6.2	V/Hz Optim.	0	1		0	602	V/F optimization selection: **0** = none **1** = automatic torque boost
P1.6.3	V/Hz Ratio	0	3		0	603	V/F ratio selection: **0** = linear **1** = squared **2** = programmable **3** = Linear with flux optim.
P1.6.4	Field WeakngPnt	8.00	320.00	Hz	60.00	604	Field weakening point.
P1.6.5	Voltage at FWP	10.00	200.00	%	100.00	605	Motor voltage (%*MotorNPVoltage) at field weakening point.
P1.6.6	V/Hz Mid Freq	0.00	Field Weakening Point	Hz	60.00	606	Programmable V/Hz curve middle point frequency.
P1.6.7	V/Hz Mid Voltg	0.00	100.00	%	100.00	607	Motor voltage (%*MotorNPVoltage) at programmable V/Hz curve middle point.
P1.6.8	Zero Freq Voltg	0.00	40.00	%	0.00	608	Motor voltage (%*MotorNPVoltage) at zero speed.
P1.6.9	Switching Freq	1.0	Switching FreqMax	kHz	3.6	609	Switching frequency in kHz. See **Appendix A**, **Table A-1**.
P1.6.10	Overvolt Contr	0	2		1	610	**0** = Off **1** = On with no ramping **2** = On with ramping
P1.6.11	Undervolt Contr	0	1		1	611	**0** = Off **1** = On
P1.6.12	Identification	0	2		0	612	Identification run. When this parameter is set greater than zero, then start command must be given within 20 seconds.

Protections — M1 → G1.7

Table 13-8: Protections — M1 → G1.7

Code	Parameter	Min.	Max.	Unit	Default	ID Number	Description
P1.7.1	Input Phase Supv	0	2		2	701	Response to input phase supervision. **0** = No Action **1** = Warning **2** = Fault
P1.7.2	4mA Fault Resp	0	2		0	702	Response to 4 mA signal supervision. **0** = No Action **1** = Warning **2** = Fault
P1.7.3	Ext. Fault Resp	0	2		2	703	Response to external fault digital input signal supervision. **0** = No Action **1** = Warning **2** = Fault
P1.7.4	FBComm. FaultResp	0	2		0	704	Response to fieldbus communication supervision. **0** = No Action **1** = Warning **2** = Fault
P1.7.5	SlotComFault Resp	0	2		0	705	Response to slot communication supervision. **0** = No Action **1** = Warning **2** = Fault
P1.7.6	Motor Therm Prot	0	3		0	707	**0** = No response **1** = Warning **2** = Fault, stop mode after fault according to ID402 **3** = Fault, stop mode after fault always by coasting
P1.7.7	MotAmbTemp Factor	-100.0	100.0	%	0.0	708	Percent of ambient temperature.
P1.7.8	MTP f0 Current	0.0	150.00	%	40.0	709	Percent of motor nameplate current.
P1.7.9	MTP Motor T	1	200	min	45	710	Time to reach 63% of final value.
P1.7.10	Motor Duty Cycle	0	100	%	100	711	Percent of nominal motor load
P1.7.11	Stall Protection	0	3		0	712	**0** = No response **1** = Warning **2** = Fault, stop mode after fault according to ID402 **3** = Fault, stop mode after fault always by coasting
P1.7.12	Stall Current	0.00	Motor CurrentMax	A	1.00	713	
P1.7.13	Stall Time Lim	1.00	120.00	s	15.00	714	
P1.7.14	Stall Freq Lim	1.00	Max_Freq	Hz	25.00	715	

Tables 13-8: Protections — M1 ➔ G1.7, continued

Code	Parameter	Min.	Max.	Unit	Default	ID Number	Description
P1.7.15	Underload Protection	0	3		0	716	**0** = No response **1** = Warning **2** = Fault, stop mode after fault according to ID402 **3** = Fault, stop mode after fault always by coasting
P1.7.16	UP fnom Torque	10.0	150.00	%	50.0	717	Minimum torque allowed when above FWP.
P1.7.17	UP f0 Torque	5.0	150.00	%	10.0	718	Minimum torque allowed with zero frequency.
P1.7.18	UP Time Limit	2.00	600.00	s	20.00	719	
P1.7.19	Autom. Restart	0	3		0	706	Resets faults. See **Page 15-20**. **0** = Disabled **1** = Automatically transferred to Bypass **2** = Reset drive only **3** = Reset drive, if fails, transferred to Bypass
P1.7.20	Fire Mode Speed	0	100.0	%	100	804	When fire mode input is triggered, drive will run at fire mode speed.

Fieldbus Parameters — M1 ➔ G1.8

Table 13-9: Fieldbus Parameters — M1 ➔ G1.8

Code	Parameter	Min.	Max.	Unit	Default	ID Number	Description
P1.8.1	FB Data Out1 Sel	0	10000		1 ①	1001	Fieldbus process data output 1 selection. Default = Actual Speed
P1.8.2	FB Data Out2 Sel	0	10000		5 ①	1002	Fieldbus process data output 2 selection. Default = Motor Current
P1.8.3	FB Data Out3 Sel	0	10000		8 ①	1003	Fieldbus process data output 3 selection. Default = Motor Voltage
P1.8.4	FB Data Out4 Sel	0	10000		7 ①	1004	Fieldbus process data output 4 selection. Default = Motor Power
P1.8.5	FB Data Out5 Sel	0	10000		9 ①	1005	Fieldbus process data output 5 selection. Default = DC-Link Voltage

① ID number of parameter or variable to be sent over fieldbus. ID 1 – 20 are Monitoring values, Menu 7 (M7). See **Table 13-13**.

Table 13-9: Fieldbus Parameters — M1 → G1.8, continued

Code	Parameter	Min.	Max.	Unit	Default	ID Number	Description
P1.8.6	FB Data Out6 Sel	0	10000		20 ①	1006	Fieldbus process data output 6 selection. Default = Application Status Word (Variable:ApplStatusWord) **b0** = Drive Ready **b1** = Run Enable **b2** = Drive Running **b3** = Drive Reversing **b4** = General Fault **b5** = General Warning **b6** = Preset Speed Active **b7** = Motor Regulator active **b8** = Output speed supervision indication **b9** = Setpoint speed supervision indication **b10** = HAND Control indication **b11** = AUTO Control indication **b12** = D-IN Firemode **b13** = Damper control signal **b14** = Bypass mode status indication **b15** = Bypass running
P1.8.7	FB Data Out7 Sel	0	10000		18 ①	1007	Fieldbus process data output 7 selection. Default = Active Fault Code
P1.8.8	FB Data Out8 Sel	0	10000		19 ①	1008	Fieldbus process data output 8 selection. Default = Active Warning Code

① ID number of parameter or variable to be sent over fieldbus. ID 1 – 20 are Monitoring values, Menu 7 (M7). See **Table 13-13**.

PI-Control Parameters — M1 → G1.9

Table 13-10: PI-Control Parameters — M1 → G1.9

Code	Parameter	Min.	Max.	Unit	Default	ID Number	Description
P1.9.1	US/Metric Units	0	1		0	1101	
P1.9.2	Setpoint Min.	Sensor_Min	PI_Setpoint_Max		(0)	1102	Minimum limit for the PI-Controller setpoint.
P1.9.3	Setpoint Max.	PI_Setpoint_Min	Sensor_Max		(500)	1103	Maximum limit for the PI-Controller setpoint.
P1.9.4	PI-StPt Ramp Time	0.00	20.00	s	1.00	1104	PI-Setpoint ramp time. (Ramp-Up Time)
P1.9.5	PI-Input Source	0	5		0	1106	PI-Controller Input Source Selection: Default #0 = (A) AI-1 **0** = (A) AI-1 **1** = (A) AI-2 **2** = Fieldbus, ProcessData1 **3** = Min. Both **4** = Max. Both **5** = Ave. Both
P1.9.6	Sensor Min.	(-10000)	Sensor_Max		(0)	1107	Actual Sensor minimum value at 0/4 mA.
P1.9.7	Sensor Max.	Sensor_Min	(10000)		(500)	1108	Actual Sensor maximum value at 20 mA.
P1.9.8	PI-Contr. P-Gain	0.00	10.00		0.10	1109	P-Term (Gain) for the PI-controller.
P1.9.9	PI-Contr. I-Time	0.00	320.00	s	30.00	1110	I-Term (Integral Time) for the PI-controller.
P1.9.10	PI-Deadband	(0)	(20000)		(0)	1111	Deadband area in units. (Hysteresis to PI Setpoint)
P1.9.11	PI Acting Mode	0	1		1	1112	PI-controller acting mode. **0** = Reverse acting **1** = Forward acting
P1.9.12	Auto Accel. Time	0.1	3000.0	s	60.0	1113	Auto Mode Accel. Time
P1.9.13	Auto Decel. Time	0.1	3000.0	s	60.0	1114	Auto Mode Decel. Time
P1.9.14	Auto S-curve Time	0.0	10.0	s	0.0	1115	Auto Mode and PI-control is NOT active

Preset Speeds — M1 → G1.10

Table 13-11: Preset Speeds — M1 → G1.10

Code	Parameter	Min.	Max.	Unit	Step	Default	ID Number	Description
P1.10.1	Preset Speed 1	0	100.0	%	0.1	30.0	1701	Preset speeds when Digital Inputs are programmed
P1.10.2	Preset Speed 2	0	100.0	%	0.1	40.0	1702	
P1.10.3	Preset Speed 3	0	100.0	%	0.1	50.0	1703	
P1.10.4	Preset Speed 4	0	100.0	%	0.1	60.0	1704	
P1.10.5	Preset Speed 5	0	100.0	%	0.1	70.0	1705	
P1.10.6	Preset Speed 6	0	100.0	%	0.1	80.0	1706	
P1.10.7	Preset Speed 7	0	100.0	%	0.1	90.0	1707	

Keypad Control Parameters — M2

This menu provides the parameters for the setting of the keypad speed setpoint, the selection of motor direction when in keypad operation, and when the STOP button is active.

Table 13-12: Keypad Control Parameters — M2

Code	Parameter	Min.	Max.	Unit	Default	ID Number ①	Description
R2.1	Speed Setpoint	0.0	100.0	%	0.0		Keypad Speed Setpoint.
P2.2	Keypad Direction	0	1		0	1009	Reverse request active from the panel **0** = Forward **1** = Reverse
P2.3	StopButton Active	0	1		1	1110	Stop button (Keypad) always active (Yes/No)
R2.4	PI-Setpoint	(-10000)	(10000)		(50)		
P2.5	PI-Setpoint Default	(-10000)	(10000)			1011	PI-regulators default setpoint

① Keypad Control Parameter ID Numbers are listed separately on **Page 15-28**.

Menus — M3 to M6

Menus M3 to M6 provide information on the Active Faults, Fault History, System Menu settings and the Expander Board setup. These menu items are explained in detail in **Chapter 6**.

Monitoring Menu — M7

The monitored items are the actual values of parameters and signals as well as the status and measurements of other elements. Monitored items cannot be edited.

See **Chapter 6** — Menu information item M7, for more information.

Table 13-13: Monitoring Menu

Code	Parameter	Min.	Max.	Unit	Default	ID Number	Description
V7.1	Output Frequency	-320.00	320.00	Hz	0.00	2	Output frequency to the motor
V7.2	Actual Speed	-320.0	320.0	%	0.0	1	Output speed to the motor
V7.3	Speed Setpoint	-320.0	320.0	%	0.0	3	Monitored speed setpoint. This will show also the speed setpoint below the minimum frequency.
V7.4	Motor Speed	-10000	10000	rpm	0	4	Calculated motor speed in rpm
V7.5	Motor Current	0.0	Motor CurrentMax	A	0.0	5	
V7.6	Motor Torque	-300.0	300.0	%	0.0	6	[R] Motor torque as % value, +1000 equals +100.0 % pos = clockwise, neg = counterclockwise
V7.7	Motor Power	-300.0	300.0	%	0.0	7	
V7.8	Motor Voltage	0.0	1000.0	V	0.0	8	Measured motor voltage
V7.9	DC-Bus Voltage	0	1000	V	0	9	[R] DC voltage in Volts Tfilt = 32ms.
V7.10	Unit Temperature	-1000	1000	°F	0	10	Temperature of the heat sink
V7.11	Motor Temperature	0.0	1000.0	%	0.0	11	
V7.12	(A) AI-1	-10.00	20.00	V	0.00	12	Voltage Input value [V]
V7.13	(A) AI-2	-10.00	20.00	mA	0.00	13	Current Input value [mA]
V7.14	DI-1 DI-2 DI-3	0	7		0	14	DIA-1, DIA-2 and DIA-3 status
V7.15	DI-4 DI-5 DI-6	0	7		0	15	DIB-4, DIB-5 and DIB-6 status
V7.16	DO-1 RO-1 RO-2	0	7		0	16	DO-1, RO-1 and RO-2 status
V7.17	(A) AO-1	0.00	20.00	mA	0.00	17	
V7.18	ActFaultCode	0	200		0	18	Active Fault code.
V7.19	ActWarnCode	0	200		0	19	Active Warning code.

Table 13-13: Monitoring Menu, continued

Code	Parameter	Min.	Max.	Unit	Default	ID Number	Description
V7.20	Status Word	-32768	32767		0	20	**b0** = Drive Ready **b1** = Run Enable **b2** = Drive Running **b3** = Drive Reversing **b4** = General Fault **b5** = General Warning **b6** = Preset Speed Active **b7** = Motor Regulator active **b8** = Output speed supervision indication **b9** = Setpoint speed supervision indication **b10** = HAND Control indication **b11** = AUTO Control indication **b12** = D-IN Firemode **b13** = Damper control signal **b14** = Bypass mode status indication **b15** = Bypass running
V7.21	PI-Setpoint	(-10000)	(10000)	PSI or kPa	(0)	21	
V7.22	PI-Input	(-10000)	(10000)		(0)	22	Actual Sensor Value
V7.23	PI-Error	(-10000)	(10000)		(0)	23	
V7.24	PI-Output	0.0	100.0	%	0.0	24	
V7.25	RO-1 RO-2 RO-3	0	7		0	21	Monitoring the OPTB5 relay outputs.
G7.26	Multimonitor	—	—		—	—	Displays three monitor values simultaneously

Operate Menu — M8

The Operate Menu provides an easy to use method of viewing key numerical Monitoring Menu items. It also allows the setting of the keypad frequency reference. See **Chapter 6** for more information.

Chapter 14 — Temperature Control Application (SVCHS205)

Introduction

The Temperature Control Application is typically used to control levels of pumps in fans with a pressure transducer and provide °F/°C units to a keypad.

The direct frequency reference can be used for the control without the PI controller and is selected from the analog inputs, fieldbus, motor potentiometer or keypad.

The Temperature Control Application is typically used to control Building temperature. In these applications, the Temperature Control Application provides a smooth control and an integrated measurement and control package where no additional components are needed.

- Digital inputs DI-2, DI-3 and DI-5 and all outputs are freely programmable.

Additional functions:

- Analog input signal range selection
- One frequency limit supervision
- Torque limit supervision
- Speed setpoint limit supervision
- Programmable start and stop functions
- DC Brake Chopper
- Six skip frequency areas
- Programmable V/Hz curve and switching frequency
- Auto restart
- Motor thermal and stall protection: Programmable action; off, warning, fault
- Motor underload protection
- Input and output phase supervision

Details of the parameters shown in this section are available in **Chapter 15** of this Manual, listed by parameter ID number.

Control Input/Output

Table 14-1: Temperature Control Application Default I/O Configuration

	Terminal		Signal	Description
	OPTA9			
	1	+10V DC_{ref}	Reference output	Voltage for potentiometer, etc.
0 to 10V DC (Factory Default)	2	AI-1+	Analog input, voltage range 0 – 10V DC	Voltage input for PI setpoint or feedback (Programmable)
	3	AI-1-	I/O Ground	Ground for reference and controls
4 to 20 mA (Factory Default)	4	AI-2+	Analog input, current range 0 – 20 mA	Current input for PI setpoint or feedback (Programmable)
	5	AI-2-		
	6	24V DC	Control voltage output	Voltage for switches, etc. max 0.1A
	7	GND	I/O ground	Ground for reference and controls
External Interlock Wiring	8	DI-1	Start/Stop Control	Contact closed = start
	9	DI-2	External fault input (programmable)	Contact closed = fault Contact open = no fault
	10	DI-3	External Interlock (programmable)	Contact closed = OK Open = Interlocked
	11	CMA	Common for DI-1 – DI-3	Connect to GND or 24V DC
	12	24V DC	Control voltage output	Voltage for switches (see terminal 6)
	13	GND	I/O ground	Ground for reference and controls
External Interlock Wiring	14	DI-4	Speed Select 1 (programmable)	Contact closed = Speed Select 1
	15	DI-5	Fire Mode (programmable)	Contact closed = Fire Mode active
	16	DI-6	Overload relay (IntelliPass) (programmable)	Contact open = no fault Contact closed = fault
	17	CMB	Common for DI-4 – DI-6	Connect to GND or 24V DC
0 to 20 mA (Factory Default)	18	AO-1+	Output frequency Analog output	Programmable Range 0 – 20 mA, R_L max. 500W
	19	AO-1		
	20	DO-1	Digital output READY	Programmable Open collector, I ≤ 50 mA, V ≤ 48V DC
Defaults:	**OPTA2**			
21-22 Opens on RUN	21	RO-1	Relay output 1	Programmable Drive RUN is default.
22-23 Closes on RUN	22	RO-1		
	23	RO-1		
24-25 Opens on FAULT	24	RO-2	Relay output 2	Programmable Drive FAULT is default.
25-26 Closes on FAULT	25	RO-2		
	26	RO-2		

Note: For more information on jumper selections, see **Chapter 4**.

X3 Jumper Setting — CMA and CMB Grounding

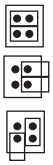

CMB Connected to Ground
CMA Connected to Ground

CMB Isolated from Ground
CMA Isolated from Ground

CMB and CMA Internally Connected and Isolated from Ground

⚠ CAUTION

Unattended start will occur if power is supplied with Start Command activated.

Parameter Lists

On the next pages you will find the lists of parameters within the respective parameter groups. The parameter descriptions are given by ID number in **Chapter 15**.

Column explanations:

Code	=	Location indication on the keypad; Shows the operator the present parameter number
Parameter	=	Name of parameter
Min.	=	Minimum value of parameter
Max.	=	Maximum value of parameter
Unit	=	Unit of parameter value; Given if available
Default	=	Value preset by factory
ID	=	ID number of the parameter for reference to **Chapter 15**

Quick Setup Parameters — M1 → G1.1

Table 14-2: Quick Setup Parameters — M1 → G1.1

Code	Parameter	Min.	Max.	Unit	Default	ID Number	Description
P1.1.1	Min Frequency	0.00	Max_ Frequency	Hz	12.00	101	Minimum output frequency, f[Hz].
P1.1.2	Max Frequency	FreqMin	320.00	Hz	60.00	102	Maximum output frequency, f[Hz].
P1.1.3	Acceleration Time	0.1	3000.0	s	60.0	103	Time from 0 Hz to maximum Hz.
P1.1.4	Deceleration Time	0.1	3000.0	s	60.0	104	Time from maximum Hz to 0 Hz.
P1.1.5	Motor NP Voltg	180	Motor VoltageMax	V	400	105	Motor nameplate voltage in Volts.
P1.1.6	Motor NP Freq	8.00	320.00	Hz	60.00	106	Motor nameplate frequency in Hertz.
P1.1.7	Motor Nom Speed	24	20000	rpm	1720	111	Motor nameplate speed in Rpm.
P1.1.8	Motor Nom Currnt	Motor CurrentMin	Motor CurrentMax	A	5.40	108	Motor nameplate current, I[A]
P1.1.9	Power Factor	0.30	1.00		0.85	109	Motor power factor. (Cos Phii)
P1.1.10	Service Factor	0.10	2.00		1.00	110	Motor service factor. This will calculate the motor current limit. (MotorNomCurrent x Service Factor)
P1.1.11	Current Limit	Motor CurrentMin	Motor CurrentMax	A	7.00	107	Output current limit of the unit in Amps.
P1.1.12	Start Srce Hand	1	3		1	112	Parameter for Local Start/Stop/ Reverse control location. Default = Keypad **1** = Keypad **2** = DI-1 Start **3** = I/O Three Wire

Table 14-2: Quick Setup Parameters — M1 → G1.1, continued

Code	Parameter	Min.	Max.	Unit	Default	ID Number	Description
P1.1.13	StPt Source Hand	0	3		2	113	Local speed setpoint selection: **0** = analog input AI-1 **1** = analog input AI-2 **2** = Speed Setpoint from Keypad **3** = Motor Potentiometer
P1.1.14	Start Srce Auto	1	4		2	114	Parameter for Remote Start/ Stop/Reverse control location. Default = DI-1 Start **1** = Keypad **2** = DI-1 Start **3** = I/O Three Wire **4** = Fieldbus
P1.1.15	StPt Source Auto	0	4		0	115	PI-setpoint selection: **0** = analog input AI-1 **1** = analog input AI-2 **2** = PI Setpoint from Keypad **3** = Motor Potentiometer **4** = PI Setpoint from Fieldbus
P1.1.16	PI-Input Source	0	2		0	1106	PI-Controller Input Source Selection: Default #0 = (A) AI-1 **0** = (A) AI-1 **1** = (A) AI-2 **2** = Fieldbus, Process Data 1 **3** = Min. Both **4** = Max. Both **5** = Ave. Both
P1.1.17	Sensor Min.	(-10000)	Sensor_Max		(200)	1107	Actual Sensor minimum value at 0/4 mA.
P1.1.18	Sensor Max.	Sensor_Min	(10000)		(1200)	1108	Actual Sensor maximum value at 20 mA.
P1.1.19	PI-Contr. P-Gain	0.00	10.00		0.10	1109	P-Term (Gain) for the PI-Controller
P1.1.20	PI-Contr. I-Time	0.00	320.00	s	30.00	1110	I-Term (Integral Time) for the PI-controller
P1.1.21	PI-Deadband	(0)	(20000)		(0)	1111	Deadband area in units. (Hysteresis to PI-Setpoint)
P1.1.22	AutoAccelTime	0.1	3000.0	s	60.0	1113	Acceleration time, when in AUTO mode
P1.1.23	AutoDecelTime	0.1	3000.0	s	60.0	1114	Deceleratin time, when in AUTO mode
P1.1.24	US/Metric Units	0	1		0	1101	

Input Signals — M1 → G1.2

Table 14-3: Input Signals — M1 → G1.2

Code	Parameter	Min.	Max.	Unit	Default	ID Number	Description
P1.2.1	Start Mode	0	3		1	201	Start Function: **0** = Normal start without interlockings. **1** = Interlocked start. One of the digital in puts must be programmed to Intlk/RunEna. DI-3 is defaulted for this feature. **2** = Mode 1 + timeout supervision. If the interlock is not OK within the interlock timeout time, start request is ignored and must be given again. **3** = Delayed start. Start request is given after delay time has expired.
P1.2.2	Intlk Stop Mode	0	1		1	216	**0** = Coasting **1** = Ramp
P1.2.3	Intlk Timeout	0.00	300.00	s	5.00	202	Interlock timeout time for Start Function #2. Default = 5s.
P1.2.4	Start Delay Time	0.00	300.00	s	5.00	203	Start delay time for Start Function #3. Default = 5s.
P1.2.5	(A) DI-2 Funct.	0	17		1	204	Default #1 External Fault Close **0** = Stop pulse, when 3-wire start/stop logic is selected. (False=Stop, True=Ready to Run) **1** = Ext. fault, closing contact **2** = External fault, opening contact **3** = Fault reset **4** = Run enable-Closed Contact **5** = Force ctrl. place to Hand **6** = Force ctrl. place to Auto **7** = Reverse **8** = Speed Select 1 **9** = Fire Mode-Closed Contact **10** = Speed Select 2 **11** = Speed Select 3 **12** = Force Bypass **13** = External interlock closed **14** = External interlock open **15** = Mot. Pot. UP **16** = Mot. Pot. DOWN **17** = Fire Mode-Open Contact

⚠ CAUTION

Unattended start will occur if power is supplied with Start Command activated.

Table 14-3: Input Signals — M1 → G1.2, continued

Code	Parameter	Min.	Max.	Unit	Default	ID Number	Description
P1.2.6	(A) DI-3 Funct.	0	17		13	205	Default #13 Interlock/Run Enable **0** = Not Used **1** = Ext. fault, closing contact **2** = External fault, opening contact **3** = Fault reset **4** = Run enable-Closed Contact **5** = Force ctrl. place to Hand **6** = Force ctrl. place to Auto **7** = Reverse **8** = Speed Select 1 **9** = Fire Mode-Closed Contact **10** = Speed Select 2 **11** = Speed Select 3 **12** = Force Bypass **13** = External interlock closed **14** = External interlock open **15** = Mot. Pot. UP **16** = Mot. Pot. DOWN **17** = Fire Mode-Open Contact
P1.2.7	(A) DI-4 Funct.	0	17		8	206	Default #8 Speed Select 1 **0** = Not Used **1** = Ext. fault, closing contact **2** = External fault, opening contact **3** = Fault reset **4** = Run enable-Closed Contact **5** = Force ctrl. place to Hand **6** = Force ctrl. place to Auto **7** = Reverse **8** = Speed Select 1 **9** = Fire Mode-Closed Contact **10** = Speed Select 2 **11** = Speed Select 3 **12** = Force Bypass **13** = External interlock closed **14** = External interlock open **15** = Mot. Pot. UP **16** = Mot. Pot. DOWN **17** = Fire Mode-Open Contact

Table 14-3: Input Signals — M1 → G1.2, continued

Code	Parameter	Min.	Max.	Unit	Default	ID Number	Description
P1.2.8	(A) DI-5 Funct.	0	17		9	207	Default #9 Fire-Mode **0** = Not Used **1** = Ext. fault, closing contact **2** = External fault, opening contact **3** = Fault reset **4** = Run enable-Closed Contact **5** = Force ctrl. place to Hand **6** = Force ctrl. place to Auto **7** = Reverse **8** = Speed Select 1 **9** = Fire Mode-Closed Contact **10** = Speed Select 2 **11** = Speed Select 3 **12** = Force Bypass **13** = External interlock closed **14** = External interlock open **15** = Mot. Pot. UP **16** = Mot. Pot. DOWN **17** = Fire Mode-Open Contact
P1.2.9	(A) DI-6 Funct.	0	17		0	208	Default #0 Overload Fault Relay-input **0** = Overload fault relay (Used in Intellipass) **1** = Ext. fault, closing contact **2** = External fault, opening contact **3** = Fault reset **4** = Run enable-Closed Contact **5** = Force ctrl. place to Hand **6** = Force ctrl. place to Auto **7** = Reverse **8** = Speed Select 1 **9** = Fire Mode-Closed Contact **10** = Speed Select 2 **11** = Speed Select 3 **12** = Force Bypass **13** = External interlock closed **14** = External interlock open **15** = Mot. Pot. UP **16** = Mot. Pot. DOWN **17** = Fire Mode-Open Contact
P1.2.10	(A) AI-1 Minimum	0.00	Max.	%	0.00	217	Default applies for 0V or 0 mA
P1.2.11	(A) AI-1 Maximum	Min.	100.0	%	100.00	218	Default applies for 10V or 20 mA
P1.2.12	(A) AI-1 Invert	0	1		0	209	**0** = Not inverted **1** = Inverted
P1.2.13	(A) AI-1 Filter	0.00	10.00	s	0.10	210	**0** = No filtering
P1.2.14	(A) AI-2 Minimum	0.00	Max.	%	20.00	219	Default applies for 2V or 4 mA
P1.2.15	(A) AI-2 Maximum	Min.	100.0	%	100.00	220	Default applies for 10V or 20 mA
P1.2.16	(A) AI-2 Invert	0	1		0	212	**0** = Not inverted **1** = Inverted
P1.2.17	(A) AI-2 Filter	0.00	10.00	s	0.10	213	**0** = No filtering
P1.2.18	StPt. Scale Min	0.0	100.0	%	0.0	214	Speed that corresponds to the minimum setpoint signal.

Table 14-3: Input Signals — M1 → G1.2, continued

Code	Parameter	Min.	Max.	Unit	Default	ID Number	Description
P1.2.19	StPt. Scale Max	0.0	100.0	%	0.0	215	Speed that corresponds to the maximum setpoint signal. 0.0%=NOT IN USE!
P1.2.20	MotPotStPt Memory	0	1		0	221	Parameter to select reset function for motor potentiometer speed setpoint. Default: No reset.

Output Signals — M1 → G1.3

Table 14-4: Output Signals — M1 → G1.3

Code	Parameter	Min.	Max.	Unit	Default	ID Number	Description
P1.3.1	(A) AO-1 Funct.	0	8		1	301	Analog output function: **0** = FB-Control (Fieldbus Passthrough, ProcessDataIN3) **1** = O/P frequency (0 - f max) **2** = Reference frequency (0 - f max) **3** = Motor speed (0 - 100% x Motor nom. speed) **4** = O/P current (0 - 100% x I nMot) **5** = Motor torque (0 - 100% x T nMot) **6** = Motor power (0 - 100% x P nMot) **7** = Motor voltage (0 - 100% x U nMot) **8** = DC-Bus Voltage (0 - 100% x U nMot)
P1.3.2	(A) AO-1 Filter	0.00	10.00	s	1.00	302	
P1.3.3	(A) AO-1 Invert	0	1		0	303	**0** = Not inverted **1** = Inverted
P1.3.4	(A) AO-1 Min.	0	1		0	304	**0** = 0 mA **1** = 4 mA
P1.3.5	(A) AO-1 Scale	10	1000	%	100	305	

Table 14-4: Output Signals — M1 ➔ G1.3, continued

Code	Parameter	Min.	Max.	Unit	Default	ID Number	Description
P1.3.6	(A) DO-1 Funct.	0	26		1	306	Default=Drive Ready **0** = Not used **1** = Drive Ready **2** = Drive Running **3** = General Fault **4** = General Fault inverted **5** = Drive overheat warning **6** = External fault or warning **7** = Reference (4mA) fault or warning **8** = General Warning **9** = Drive Reversing **10** =Preset Speed Active **11** = Speed setpoint=Actual Speed (=At speed) **12** = Motor regulator activated **13** = Actual Speed limit supervision **14** = Speed Setpoint limit supervision **15** = Torque limit supervision **16** = Timer On/Timer Off output control (Trigger is run request) **17** = Selections #16 inverted **18** = Frequency converter temperature limit supervision **19** = Unrequested rotation direction **20** = Thermistor fault / warning **21** = Hand Control Active **22** = Auto Control Active **23** = DI-Fire Mode Active **24** = Relay to energize an external element before starting the drive. **25** = FB-Control **26** = Bypass Run
P1.3.7	(B) RO-1 Funct.	0	24		2	307	Same as parameter 1.3.6.
P1.3.8	(B) RO-2 Funct.	0	24		3	308	Same as parameter 1.3.6
P1.3.9	(D) RO-1 Funct.	0	24		0	309	Same as parameter 1.3.6
P1.3.10	(D) RO-2 Funct.	0	24		0	310	Same as parameter 1.3.6
P1.3.11	(D) RO-3 Funct.	0	24		0	311	Same as parameter 1.3.6
P1.3.12	Sp.StPt Supv Fct	0	2		0	312	Speed Setpoint Supervision Function: **0** = Not used **1** = Low limit **2** = High limit
P1.3.13	Sp.StPt Supv Lim	0.0	100.0	%	0.0	313	Speed Setpoint Supervision Value.

Table 14-4: Output Signals — M1 → G1.3, continued

Code	Parameter	Min.	Max.	Unit	Default	ID Number	Description
P1.3.14	Act.Sp. Supv Fct	0	2		0	314	Actual Speed Supervision Function: **0** = Not used **1** = Low limit **2** = High limit
P1.3.15	Act.Sp. Supv Lim	0.0	100.0	%	0.0	315	Actual Speed Supervision Value. (±1.0% hysteresis)
P1.3.16	Torque Supv Fct	0	2		0	316	Torque Limit Supervision Function: **0** = Not used **1** = Low limit **2** = High limit
P1.3.17	Torque Supv Lim	0.0	300.0	%	0.0	317	Torque Limit Supervision Value
P1.3.18	TempLim Supv Fct	0	2		0	318	Temperature Limit Supervision Function: **0** = Not used **1** = Low limit **2** = High limit
P1.3.19	TempLim Supv Lim	-50	170	°F	104	319	Temperature Limit Supervision value
P1.3.20	StartRlyON-Del.	0.0	100.0	s	0.0	320	Relay/Digital output ON-delay time after start-command is given.
P1.3.21	StartRlyOFF-Del.	0.0	100.0	s	0.0	321	Relay/Digital output OFF-delay time after stop-command is given.

Drive Control Parameters — M1 → G1.4

Table 14-5: Drive Control Parameters — M1 → G1.4

Code	Parameter	Min.	Max.	Unit	Default	ID Number	Description
P1.4.1	Start Mode	0	1		0	401	**0** = Ramp **1** = Flying start
P1.4.2	Stop Mode	0	1		1	402	**0** = Coasting **1** = Ramp
P1.4.3	Brake Chopper	0	4		0	403	Brake Chopper Mode Selection. **0** = Brake NO, Test NO **1** = Brake YES(Run), Test YES (Ready+run) **2** = Brake chopper EXTERNAL, Test NO **3** = Brake YES(Ready+run), Test YES (Ready+run) **4** = Brake YES(Run), Test NO
P1.4.4	S-curve Time	0.0	10.0	s	0.0	404	Smooth ratio for S-curve

Prohibit Frequencies— M1 → G1.5

Table 14-6: Prohibit Frequencies — M1 → G1.5

Code	Parameter	Min.	Max.	Unit	Default	ID Number	Description
P1.5.1	SkipF1 Low Lim	0.0	100.0	%	0.0	501	Prohibit speed range 1 low limit.
P1.5.2	SkipF1 High Lim	Range_1_ Low_Lim	100.0	%	0.0	502	Prohibit speed range 1 high limit: **0** = No prohibit frequency range
P1.5.3	SkipF2 Low Lim	0.0	100.0	%	0.0	503	Prohibit speed range 2 low limit
P1.5.4	SkipF2 High Lim	Range_2_ Low_Lim	100.0	%	0.0	504	Prohibit speed range 2 high limit: **0** = No prohibit frequency range
P1.5.5	SkipF3 Low Lim	0.0	100.0	%	0.0	505	Prohibit speed range 3 low limit
P1.5.6	SkipF3 High Lim	Range_3_ Low_Lim	100.0	%	0.0	506	Prohibit speed range 3 high limit: **0** = No prohibit frequency range
P1.5.7	SkipF4 Low Lim	0.0	100.0	%	0.0	507	Prohibit speed range 4 low limit
P1.5.8	SkipF4 High Lim	Range_4_ Low_Lim	100.0	%	0.0	508	Prohibit speed range 4 high limit: **0** = No prohibit frequency range
P1.5.9	SkipF5 Low Lim	0.0	100.0	%	0.0	509	Prohibit speed range 5 low limit
P1.5.10	SkipF5 High Lim	Range_5_ Low_Lim	100.0	%	0.0	510	Prohibit speed range 5 high limit: **0** = No prohibit frequency range
P1.5.11	SkipF6 Low Lim	0.0	100.0	%	0.0	511	Prohibit speed range 6 low limit
P1.5.12	SkipF6 High Lim	Range_6_ Low_Lim	100.0	%	0.0	512	Prohibit speed range 6 high limit: **0** = No prohibit frequency range
P1.5.13	PH Acc/Dec Ramp	0.1	10.0	x	1.0	513	Acceleration/Deceleration time factor to pass prohibit speed window.

Motor Control Parameters — M1 → G1.6

Table 14-7: Motor Control Parameters — M1 → G1.6

Code	Parameter	Min.	Max.	Unit	Default	ID Number	Description
P1.6.1	Motor Ctrl Mode	0	1		0	601	Motor control mode: **0** = frequency control **1** = speed control
P1.6.2	V/Hz Optim.	0	1		0	602	V/F optimization selection: **0** = none **1** = automatic torque boost
P1.6.3	V/Hz Ratio	0	3		0	603	V/F ratio selection: **0** = linear **1** = squared **2** = programmable **3** = Linear with flux optim.
P1.6.4	Field WeakngPnt	8.00	320.00	Hz	60.00	604	Field weakening point.
P1.6.5	Voltage at FWP	10.00	200.00	%	100.00	605	Motor voltage (%*MotorNPVoltage) at field weakening point.
P1.6.6	V/Hz Mid Freq	0.00	Field Weakening Point	Hz	60.00	606	Programmable V/Hz curve middle point frequency.
P1.6.7	V/Hz Mid Voltg	0.00	100.00	%	100.00	607	Motor voltage (%*MotorNPVoltage) at programmable V/Hz curve middle point.
P1.6.8	Zero Freq Voltg	0.00	40.00	%	0.00	608	Motor voltage (%*MotorNPVoltage) at zero speed.
P1.6.9	Switching Freq	1.0	Switching FreqMax	kHz	3.6	609	Switching frequency in kHz. See **Appendix A**, **Table A-1**.
P1.6.10	Overvolt Contr	0	2		1	610	**0** = Off **1** = On with no ramping **2** = On with ramping
P1.6.11	Undervolt Contr	0	1		1	611	**0** = Off **1** = On
P1.6.12	Identification	0	2		0	612	Identification run. When this parameter is set greater than zero, then start command must be given within 20 seconds.

Protections — M1 → G1.7

Table 14-8: Protections — M1 → G1.7

Code	Parameter	Min.	Max.	Unit	Default	ID Number	Description
P1.7.1	Input Phase Supv	0	2		2	701	Response to input phase supervision. **0** = No Action **1** = Warning **2** = Fault
P1.7.2	4mA Fault Resp	0	2		0	702	Response to 4 mA signal supervision. **0** = No Action **1** = Warning **2** = Fault
P1.7.3	Ext. Fault Resp	0	2		2	703	Response to external fault digital input signal supervision. **0** = No Action **1** = Warning **2** = Fault
P1.7.4	FBComm. FaultResp	0	2		0	704	Response to fieldbus communication supervision. **0** = No Action **1** = Warning **2** = Fault
P1.7.5	SlotComFault Resp	0	2		0	705	Response to slot communication supervision. **0** = No Action **1** = Warning **2** = Fault
P1.7.6	Motor Therm Prot	0	3		0	707	**0** = No response **1** = Warning **2** = Fault, stop mode after fault according to ID402 **3** = Fault, stop mode after fault always by coasting
P1.7.7	MotAmbTemp Factor	-100.0	100.0	%	0.0	708	Percent of ambient temperature.
P1.7.8	MTP f0 Current	0.0	150.00	%	40.0	709	Percent of motor nameplate current.
P1.7.9	MTP Motor T	1	200	min	45	710	Time to reach 63% of final value.
P1.7.10	Motor Duty Cycle	0	100	%	100	711	Percent of nominal motor load
P1.7.11	Stall Protection	0	3		0	712	**0** = No response **1** = Warning **2** = Fault, stop mode after fault according to ID402 **3** = Fault, stop mode after fault always by coasting
P1.7.12	Stall Current	0.00	Motor CurrentMax	A	1.00	713	
P1.7.13	Stall Time Lim	1.00	120.00	s	15.00	714	
P1.7.14	Stall Freq Lim	1.00	Max_Freq	Hz	25.00	715	

Tables 14-8: Protections — M1 ➔ G1.7, continued

Code	Parameter	Min.	Max.	Unit	Default	ID Number	Description
P1.7.15	Underload Protection	0	3		0	716	**0** = No response **1** = Warning **2** = Fault, stop mode after fault according to ID402 **3** = Fault, stop mode after fault always by coasting
P1.7.16	UP fnom Torque	10.0	150.00	%	50.0	717	Minimum torque allowed when above FWP.
P1.7.17	UP f0 Torque	5.0	150.00	%	10.0	718	Minimum torque allowed with zero frequency.
P1.7.18	UP Time Limit	2.00	600.00	s	20.00	719	
P1.7.19	Autom. Restart	0	3		0	706	Resets faults. See **Page 15-20**. **0** = Disabled **1** = Automatically transferred to Bypass **2** = Reset drive only **3** = Reset drive, if fails, transferred to Bypass
P1.7.20	Fire Mode Speed	0	100.0	%	100	804	When fire mode input is triggered, drive will run at fire mode speed.

Fieldbus Parameters — M1 ➔ G1.8

Table 14-9: Fieldbus Parameters — M1 ➔ G1.8

Code	Parameter	Min.	Max.	Unit	Default	ID Number	Description
P1.8.1	FB Data Out1 Sel	0	10000		1 ①	1001	Fieldbus process data output 1 selection. Default = Actual Speed
P1.8.2	FB Data Out2 Sel	0	10000		5 ①	1002	Fieldbus process data output 2 selection. Default = Motor Current
P1.8.3	FB Data Out3 Sel	0	10000		8 ①	1003	Fieldbus process data output 3 selection. Default = Motor Voltage
P1.8.4	FB Data Out4 Sel	0	10000		7①	1004	Fieldbus process data output 4 selection. Default = Motor Power
P1.8.5	FB Data Out5 Sel	0	10000		9 ①	1005	Fieldbus process data output 5 selection. Default = DC-Link Voltage

① ID number of parameter or variable to be sent over fieldbus. ID 1 – 20 are Monitoring values, Menu 7 (M7). See **Table 14-13**.

Table 14-9: Fieldbus Parameters — M1 → G1.8, continued

Code	Parameter	Min.	Max.	Unit	Default	ID Number	Description
P1.8.6	FB Data Out6 Sel	0	10000		20 ①	1006	Fieldbus process data output 6 selection. Default = Application Status Word (Variable:ApplStatusWord) **b0** = Drive Ready **b1** = Run Enable **b2** = Drive Running **b3** = Drive Reversing **b4** = General Fault **b5** = General Warning **b6** = Preset Speed Active **b7** = Motor Regulator active **b8** = Output speed supervision indication **b9** = Setpoint speed supervision indication **b10** = HAND Control indication **b11** = AUTO Control indication **b12** = D-IN Firemode **b13** = Damper control signal **b14** = Bypass mode status indication **b15** = Bypass running
P1.8.7	FB Data Out7 Sel	0	10000		18 ①	1007	Fieldbus process data output 7 selection. Default = Active Fault Code
P1.8.8	FB Data Out8 Sel	0	10000		19 ①	1008	Fieldbus process data output 8 selection. Default = Active Warning Code

① ID number of parameter or variable to be sent over fieldbus. ID 1 – 20 are Monitoring values, Menu 7 (M7). See **Table 14-13**.

PI-Control Parameters — M1 → G1.9

Table 14-10: PI-Control Parameters — M1 → G1.9

Code	Parameter	Min.	Max.	Unit	Default	ID Number	Description
P1.9.1	US/Metric Units	0	1		0	1101	
P1.9.2	Setpoint Min.	Sensor_Min	PI_Setpoint_Max		(200)	1102	Minimum limit for the PI-Controller setpoint.
P1.9.3	Setpoint Max.	PI_Setpoint_Min	Sensor_Max		(1200)	1103	Maximum limit for the PI-Controller setpoint.
P1.9.4	StPt Ramp Time	0.00	20.00	s	1.00	1104	PI-Setpoint ramp time. (Ramp-Up Time)
P1.9.5	PI-Input Source	0	5		0	1106	PI-Controller Input Source Selection: Default #0 = (A) AI-1 **0** = (A) AI-1 **1** = (A) AI-2 **2** = Fieldbus, ProcessData1 **3** = Min. Both **4** = Max. Both **5** = Ave. Both
P1.9.6	Sensor Min.	(-10000)	Sensor_Max		(200)	1107	Actual Sensor minimum value at 0/4 mA.
P1.9.7	Sensor Max.	Sensor_Min	(10000)		(1200)	1108	Actual Sensor maximum value at 20 mA.
P1.9.8	PI-Contr. P-Gain	0.00	10.00		0.10	1109	P-Term (Gain) for the PI-controller.
P1.9.9	PI-Contr. I-Time	0.00	320.00	s	30.00	1110	I-Term (Integral Time) for the PI-controller.
P1.9.10	PI-Deadband	(0)	(20000)		(0)	1111	Deadband area in units. (Hysteresis to PI Setpoint)
P1.9.11	PI Acting Mode	0	1		1	1112	PI-controller acting mode. **0** = Reverse acting **1** = Forward acting
P1.9.12	Auto Accel. Time	0.1	3000.0	s	60.0	1113	Auto Mode Accel. Time
P1.9.13	Auto Decel. Time	0.1	3000.0	s	60.0	1114	Auto Mode Decel. Time
P1.9.14	Auto S-curve Time	0.0	10.0	s	0.0	1115	Auto Mode and PI-control is NOT active

Preset Speeds — M1 → G1.10

Table 14-11: Preset Speeds — M1 → G1.10

Code	Parameter	Min.	Max.	Unit	Step	Default	ID Number	Description
P1.10.1	Preset Speed 1	0	100.0	%	0.1	30.0	1701	Preset speeds when Digital Inputs are programmed
P1.10.2	Preset Speed 2	0	100.0	%	0.1	40.0	1702	
P1.10.3	Preset Speed 3	0	100.0	%	0.1	50.0	1703	
P1.10.4	Preset Speed 4	0	100.0	%	0.1	60.0	1704	
P1.10.5	Preset Speed 5	0	100.0	%	0.1	70.0	1705	
P1.10.6	Preset Speed 6	0	100.0	%	0.1	80.0	1706	
P1.10.7	Preset Speed 7	0	100.0	%	0.1	90.0	1707	

Keypad Control Parameters — M2

This menu provides the parameters for the setting of the keypad speed setpoint, the selection of motor direction when in keypad operation, and when the STOP button is active.

Table 14-12: Keypad Control Parameters — M2

Code	Parameter	Min.	Max.	Unit	Default	ID Number ①	Description
R2.1	Speed Setpoint	0.0	100.0	%	0.0		Keypad Speed Setpoint.
P2.2	Keypad Direction	0	1		0	1009	Reverse request active from the panel **0** = Forward **1** = Reverse
P2.3	StopButton Active	0	1		1	1110	Stop button (Keypad) always active (Yes/No)
R2.4	PI-Setpoint	(-10000)	(10000)		(800)		
P2.5	PI-Setpoint Default	(-10000)	(10000)			1011	PI-regulators default setpoint

① Keypad Control Parameter ID Numbers are listed separately on **Page 15-28**.

Menus — M3 to M6

Menus M3 to M6 provide information on the Active Faults, Fault History, System Menu settings and the Expander Board setup. These menu items are explained in detail in **Chapter 6**.

Monitoring Menu — M7

The monitored items are the actual values of parameters and signals as well as the status and measurements of other elements. Monitored items cannot be edited.

See **Chapter 6** — Menu information item M7, for more information.

Table 14-13: Monitoring Menu

Code	Parameter	Min.	Max.	Unit	Default	ID Number	Description
V7.1	Output Frequency	-320.00	320.00	Hz	0.00	2	Output frequency to the motor
V7.2	Actual Speed	-320.0	320.0	%	0.0	1	Output speed to the motor
V7.3	Speed Setpoint	-320.0	320.0	%	0.0	3	Monitored speed setpoint. This will show also the speed setpoint below the minimum frequency.
V7.4	Motor Speed	-10000	10000	rpm	0	4	Calculated motor speed in rpm
V7.5	Motor Current	0.0	Motor CurrentMax	A	0.0	5	
V7.6	Motor Torque	-300.0	300.0	%	0.0	6	[R] Motor torque as % value, +1000 equals +100.0 % pos = clockwise, neg = counterclockwise
V7.7	Motor Power	-300.0	300.0	%	0.0	7	
V7.8	Motor Voltage	0.0	1000.0	V	0.0	8	Measured motor voltage
V7.9	DC-Bus Voltage	0	1000	V	0	9	[R] DC voltage in Volts Tfilt = 32ms.
V7.10	Unit Temperature	-1000	1000	°F	0	10	Temperature of the heat sink
V7.11	Motor Temperature	0.0	1000.0	%	0.0	11	
V7.12	(A) AI-1	-10.00	20.00	V	0.00	12	Voltage Input value [V]
V7.13	(A) AI-2	-10.00	20.00	mA	0.00	13	Current Input value [mA]
V7.14	DI-1 DI-2 DI-3	0	7		0	14	DIA-1, DIA-2 and DIA-3 status
V7.15	DI-4 DI-5 DI-6	0	7		0	15	DIB-4, DIB-5 and DIB-6 status
V7.16	DO-1 RO-1 RO-2	0	7		0	16	DO-1, RO-1 and RO-2 status
V7.17	(A) AO-1	0.00	20.00	mA	0.00	17	
V7.18	ActFaultCode	0	200		0	18	Active Fault code.
V7.19	ActWarnCode	0	200		0	19	Active Warning code.

Table 14-13: Monitoring Menu, continued

Code	Parameter	Min.	Max.	Unit	Default	ID Number	Description
V7.20	Status Word	-32768	32767		0	20	**b0** = Drive Ready **b1** = Run Enable **b2** = Drive Running **b3** = Drive Reversing **b4** = General Fault **b5** = General Warning **b6** = Preset Speed Active **b7** = Motor Regulator active **b8** = Output speed supervision indication **b9** = Setpoint speed supervision indication **b10** = HAND Control indication **b11** = AUTO Control indication **b12** = D-IN Firemode **b13** = Damper control signal **b14** = Bypass mode status indication **b15** = Bypass running
V7.21	PI-Setpoint	(-10000)	(10000)	F or C	(0)	21	
V7.22	PI-Input	(-10000)	(10000)		(0)	22	Actual Sensor Value
V7.23	PI-Error	(-10000)	(10000)		(0)	23	
V7.24	PI-Output	0.0	100.0	%	0.0	24	
V7.25	RO-1 RO-2 RO-3	0	7		0	25	Monitoring the OPTB5 relay outputs.
G7.26	Multimonitor	—	—		—	—	Displays three monitor values simultaneously

Operate Menu — M8

The Operate Menu provides an easy to use method of viewing key numerical Monitoring Menu items. It also allows the setting of the keypad frequency reference. See **Chapter 6** for more information.

Chapter 15 — Description of Parameters

Parameters by ID Number

On the following pages you will find the parameter descriptions arranged according to the individual ID number of the parameter.

101 Minimum frequency
102 Maximum frequency

Defines the frequency limits of the drive. The maximum value for these parameters is 320 Hz. The software will automatically check the value of parameter ID314.

103 Acceleration time 1
104 Deceleration time 1

These limits correspond to the time required for the output frequency to accelerate from the zero frequency to the set maximum frequency (parameter ID102).

105 Nominal voltage of the motor

Find this value V_n on the motor nameplate. This parameter sets the voltage at the field weakening point (ID604) to 100% * V_{nMotor}.

106 Nominal frequency of the motor

Find this value f_n on the motor nameplate. This parameter sets the field weakening point (ID604) to the same value.

107 Current limit

This parameter determines the maximum motor current from the drive. The parameter value range differs for each power rating.

108 Nominal current of the motor

Find this value I_n on the motor nameplate.

109 Motor Power Factor

Find this value “Power Factor” on the motor nameplate.

110 Service Factor

This will calculate motor current limit current limit.
Current Limit = Service Factor (SF) x Motor nominal current ID108.

111 Nominal speed of the motor

Find this value n_n on the motor nameplate.

112 Start Source Hand

Start/Stop/Reverse control location in Hand mode:

1 Keypad
2 DI-1
3 I/O Three-Wire start

Note: When Three-Wire mode selected, DI-2 is automatically selected as stop command.

113 Setpoint Source Hand

Speed setpoint source selection in Hand Mode.

0 analog input AI-1
1 analog input AI-2
2 Keypad
3 Motor potentiometer

114 Start Source Auto (PI-Control)

Start/Stop/Reverse control location in Auto mode:

1 Keypad
2 DI-1
3 I/O Three-Wire
4 Fieldbus

Note: When Three-Wire mode selected, DI-2 is automatically selected as stop command.

115 Setpoint Source Auto (PI-Control)

PI Setpoint Source selection:

0 Analog input AI-1
1 Analog input AI-2
2 Keypad
3 Motor potentiometer
4 Fieldbus

Table 15-1: Selections for IDs 112, 113, 114 and 115

Indicator	Description
Hand	**Hand** Indicates that HAND has been chosen in the HOA control mode.
Off	**Off** Indicates that the VSD Series drive is not ready to operate. (Ready-indicator is OFF).
Auto	**Auto** Indicates that AUTO has been chosen in the HOA control mode.

116 Preset Speed

This parameter determines the frequency reference for Preset Speed 1 operation when either DI-2, DI-4, DI-5 or DI-6 are set to control Speed Select 1 and closed.
100% = Max. Frequency (ID102)

201 Start Mode

This parameter determines the start function.

0	Start – normal start without interlockings
1	Interlocked Start – One of the inputs DI-2 to DI-6 must be programmed for selection 13 or 14 "Interlock." After start command, when the interlock is removed the drive will stop and message "Interlock Missing" will be displayed. When the interlock contact is closed the drive will start automatically. **NOTE:** To do automatic start with interlock signal, the start command must remain "ON". Blinking "run" LED on the keypad will indicate that "start" command is still on and the drive will start as soon as the interlock contact is closed.
2	Interlock Time Start – This functions the same as the Interlocked Start, except that if the interlock contact is not received within the ***Interlock Timeout***, an "IntlkTime Out" message is displayed and the start sequence will need to be restarted.
3	Delay Start – This start is similar to the Interlocked Start, except that a return contact is not used. After the "Delay Time" the Drive starts.

202 Interlock Timeout

The timeout time used for an Interlocked Time Start, after which the start sequence must be restarted if no acknowledgement contact is received. See Start Mode (ID201).

203 Delay Time

The delay time following a Delay Start, after which the drive will be started. See Start Mode (ID201).

204 DI-2 – DI6 function

This parameter has 17 selections.

0	Stop pulse, when 3-wire start/stop selected
1	External fault closed
2	External fault open
3	Fault reset
4	Run enable — Contact open: Drive start disabled Contact closed: Drive start enabled
5	Force ctrl. place to Hand
6	Force ctrl. place to Auto
7	Reverse
8	Speed Select 1
9	Fire Mode-Closed Contact
10	Speed Select 2
11	Speed Select 3
12	Force Bypass
13	Interlock – See parameter Start Mode ID201 for details, closed contact
14	Interlock – See parameter Start Mode ID201 for details, open contact
15	Motor potentiometer UP
16	Motor potentiometer DOWN
17	Fire Mode-Open Contact

208 DI-6 Function

Same as DI-2 (ID204) except selection 0 = Overload fault relay input for Intellipass use.

209 AI-1 signal inversion

If this parameter = **0** no inversion of analog V_{in} signal takes place.

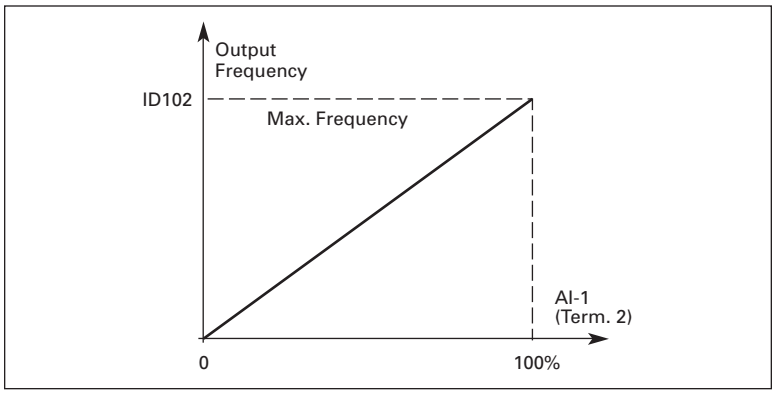

Figure 15-1: AI-1 No Signal Inversion

If this parameter = **1** inversion of analog signal takes place.
max. AI-1 signal = zero speed
min. AI-1 signal = maximum set speed

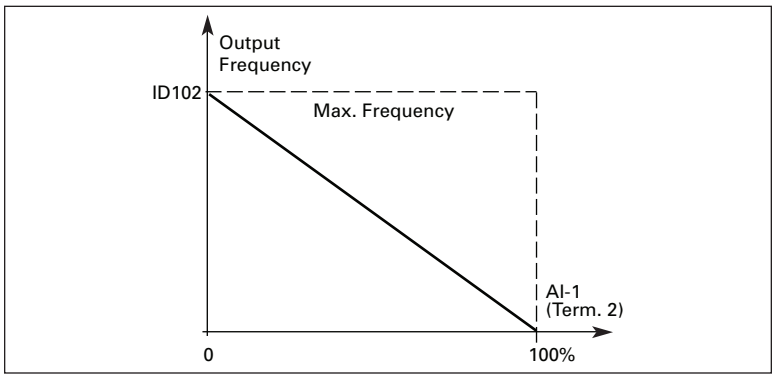

Figure 15-2: AI-1 Signal Inversion

210 AI-1 signal filter time

When this parameter is given a value greater than 0 the function that filters out disturbances from the incoming analog signal is activated.

A long filtering time makes the regulation response slower. See **Figure 15-3**.

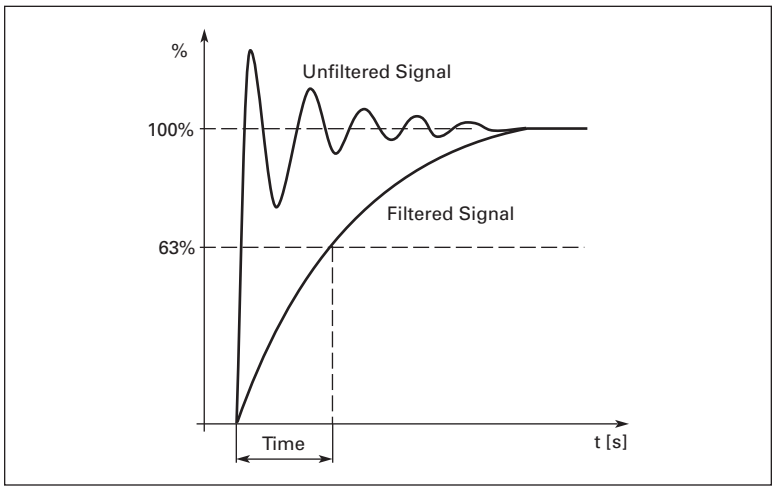

Figure 15-3: AI-1 No Signal Filtering

211 Analog input AI-2 signal range

0	0 – 20 mA
1	4 – 20 mA

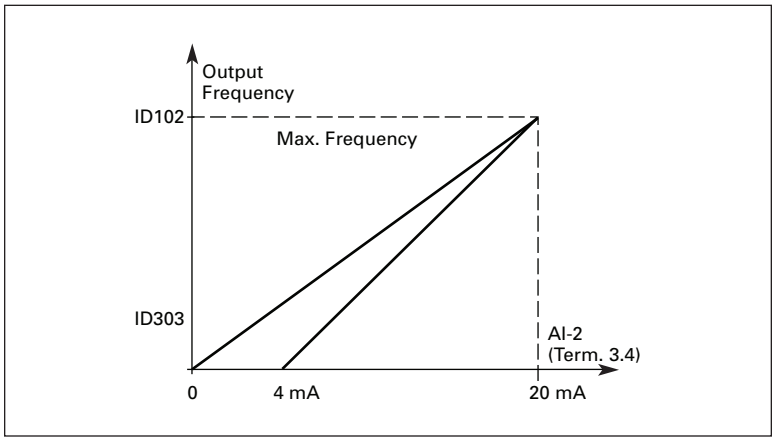

Figure 15-4: Analog Input AI-2 Scaling

212 Analog input AI-2 inversion

See ID209.

213 Analog input AI-2 (Iin) filter time

See ID210.

214 Setpoint Scale Minimum

Setpoint scaling minimum

215 Setpoint Scale Maximum

Setpoint scaling maximum
Setting value limits 0 ≤ ID214 ≤ ID215 ≤ ID102. If ID215 = 0, scaling is set OFF.

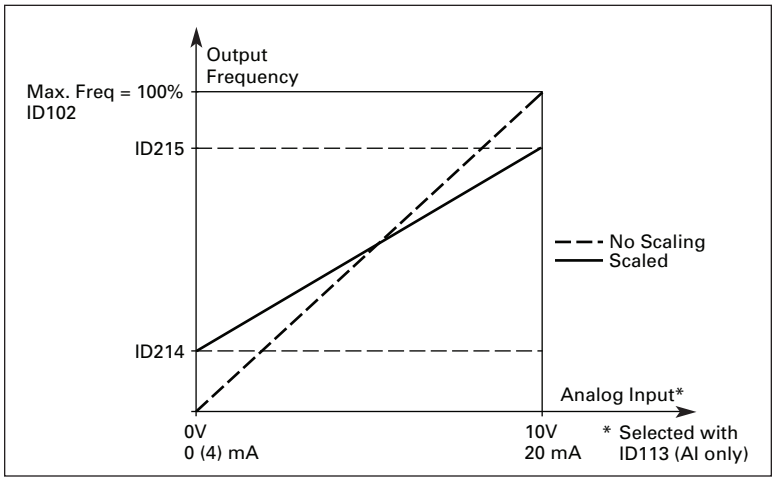

Figure 15-5: Setpoint Scaling

216 Intlk Stop Mode

Coasting:

0 The motor coasts to a halt without any control from the drive, after the Stop command.

Ramp:

1 After the Stop command, the speed of the motor is decelerated according to the set deceleration parameters. If the regenerated energy is high it may be necessary to use an external braking resistor for faster deceleration.

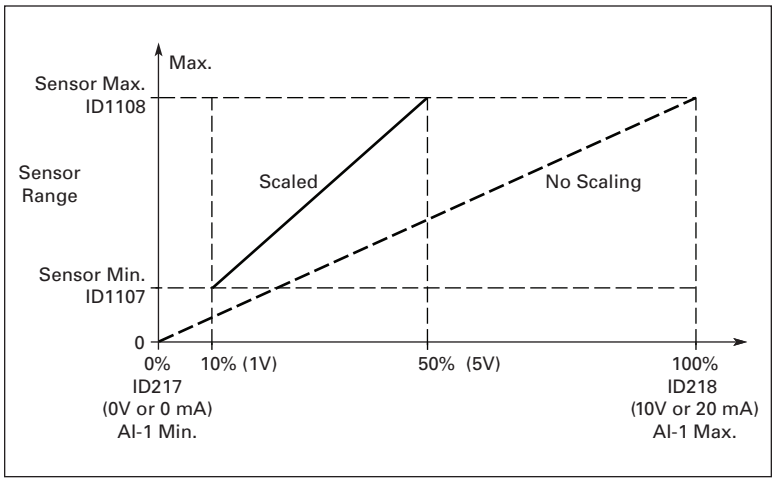

Figure 15-6: Sensor Scaling

217 AI-1 Minimum Value

Minimum scaling value for Analog input 1.

218 AI-1 Maximum Value

Maximum scaling value for Analog input 1.

221 Motor potentiometer memory reset (PID reference)

0	No reset
1	Memory reset in stop and powerdown
2	Memory reset in powerdown

301 Analog output function

This parameter selects the desired function for the analog output signal. See the specific parameters for the values available in each respective application.

302 Analog output filter time

Defines the filtering time for the analog output signal. Setting this parameter value to **0.00** will deactivate filtering.

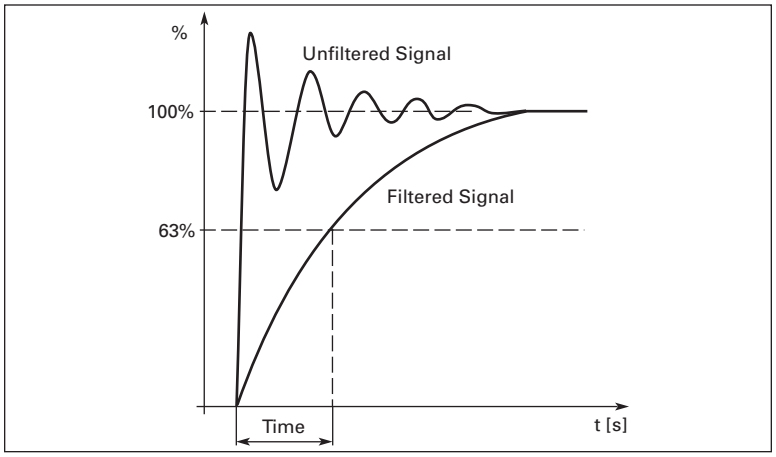

Figure 15-7: Analog Output Filtering

303 Analog output inversion

Inverts the analog output signal:

Maximum output signal = Minimum set value
Minimum output signal = maximum set value

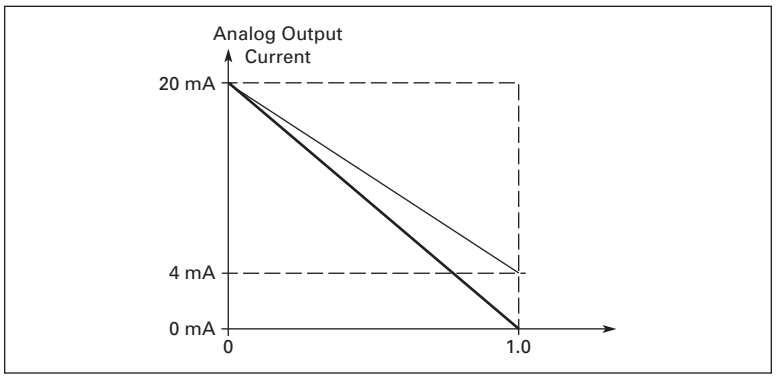

Figure 15-8: Analog Output Invert

304 Analog output minimum

Defines the signal minimum to be either 0 mA or 4 mA ("living zero"). Note the difference in analog output scaling in parameter ID305 (**Figure 15-9**).

0 Set minimum value to 0 mA

1 Set minimum value to 4 mA

305 Analog output scale

Scaling factor for analog output.

Table 15-2: Analog Output Scaling

Signal	Max. value of the signal
Output frequency	Max frequency (ID102)
Freq. Reference	Max frequency (ID102)
Motor speed	Motor nom. speed 1xn_{mMotor}
Output current	Motor nom. current 1xI_{nMotor}
Motor torque	Motor nom. torque 1xT_{nMotor}
Motor power	Motor nom. power 1xP_{nMotor}
Motor voltage	100% x V_{nMotor}
DC-link voltage	1000 V

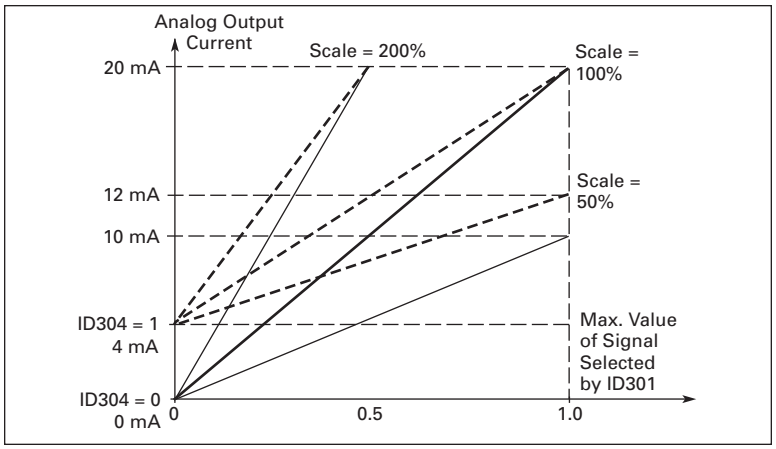

Figure 15-9: Analog Output Scaling

306 Digital output function
307 Relay output 1 function (B)
308 Relay output 2 function (B)
309 Relay output 1 function (D)
310 Relay output 2 function (D)
311 Relay output 3 function (D)

Table 15-3: Output Signals Via DO-1 and Output Relays RO-1 and RO-2

Setting value	Signal content
0 = Not used	Out of operation
1 = Ready	The drive is ready to operate
2 = Run	The drive is operating (motor is running)
3 = Fault	A fault trip has occurred
4 = Fault inverted	A fault trip not occurred
5 = Overheat warning	The heat-sink temperature exceeds +70°C/+158°F
6 = External fault or warning	Fault or warning depending on ID703
7 = Reference fault or warning	Fault or warning depending on par. ID702 • if analog reference is 4 – 20 mA and signal is <4 mA
8 = Warning	Always if a warning exists
9 = Reversed	The reverse command has been selected
10 = Preset Speed Active	Preset Speed Active digital input
11 = At speed	The output frequency has reached the set reference
12 = Motor regulator activated	Overvoltage or overcurrent regulator was activated
13 = Output frequency limit supervision	The output frequency is outside the set supervision low limit/high limit (ID314 and ID315)
14 = Speed setpoint limit supervision	The output frequency goes outside the set supervision low limit/high limit (ID312 and ID313)
15 = Torque limit supervision	The motor torque is beyond the set supervision low limit/ high limit (ID316 and ID317).

Table 15-3: Output Signals Via DO-1 and Output Relays RO-1 and RO-2 (Continued)

Setting value	Signal content
16 = Start ON relay	Start command delay timer ID320
17 = Start OFF Delay	Start command delay timer ID321
18 = Frequency converter temperature limit supervision	Frequency converter heatsink temperature goes beyond the set supervision limits (ID318 and ID319).
19 = Unrequested rotation direction	Rotation direction is different from the requested one.
20 = Thermistor fault or warning	The thermistor input of option board indicates overtemperature.
21 = HAND control active	HAND control active
22 = AUTO control active	AUTO control active
23 = Fire Mode	Fire mode active
24 = Start delay relay	Start delay relay. Used e.g. with Damper control. See param. 1.2.1 (ID201) for more details.
25 = FB-Control	Fieldbus Control
26 = Bypass Run	Unit running in bypass

312 Speed Setpoint limit, supervision function

0 No supervision
1 Low limit supervision
2 High limit supervision

If the reference value falls below or exceeds the set limit (ID313), this function generates a warning message via the digital output DO-1 or via a relay output RO-1 or RO-2 depending on the settings of ID306 to ID311.

313 Speed Setpoint, supervision value

The frequency value to be supervised by ID312.

314 Actual Speed supervision function

0 No supervision
1 Low limit supervision
2 High limit supervision

If the output frequency goes under/over the set limit (ID315) this function generates a warning message via the digital output DO-1 or via the relay outputs RO-1 or RO-2 depending on the settings of parameters ID306 to ID311.

315 Actual Speed supervision value

Selects the frequency value supervised by parameter ID314. See **Figure 15-10**.

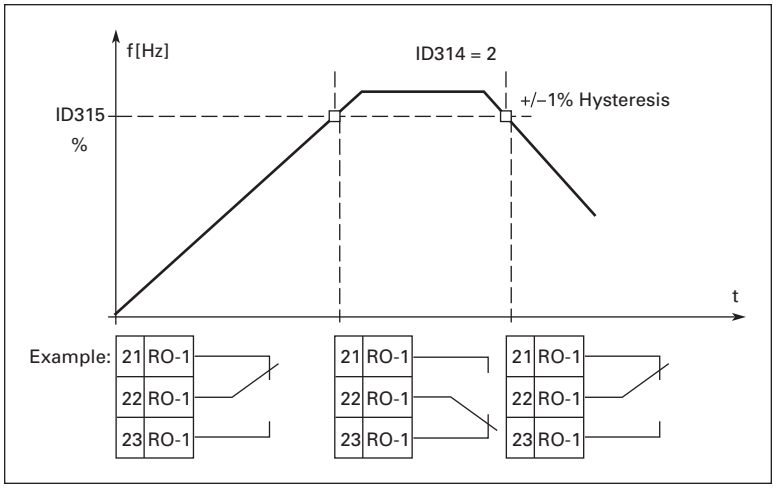

Figure 15-10: Output Frequency Supervision

316 Torque limit, supervision function

0	No supervision
1	Low limit supervision
2	High limit supervision

If the calculated torque value falls below or exceeds the set limit (ID317) this function generates a warning message via the digital output DO-1 or via a relay output RO-1 or RO-2 depending on the settings of ID306 to ID311.

317 Torque limit, supervision value

Set here the torque value to be supervised by ID316.

318 Frequency converter temperature limit supervision

0	No supervision
1	Low limit supervision
2	High limit supervision

If the temperature of the drive falls below or exceeds the set limit (ID319), this function generates a warning message via digital output DO-1 or relay outputs RO-1 or RO-2 depending on the settings of ID306 to ID311.

319 Frequency converter temperature limit value

This temperature value is supervised by ID318.

320 Start ON Delay

Relay or Digital output ON-delay time after start command is given.

321 Start OFF Delay

Relay or Digital output OFF-delay time after start command is given.

401 Start Function

Ramp:

0 The drive starts from 0 Hz and accelerates to the set reference frequency within the set acceleration time. (Load inertia or starting friction may cause prolonged acceleration times.)

Flying start:

1 The drive is able to start into a running motor by applying a small torque to motor and searching for the frequency corresponding to the speed the motor is running at. Searching starts from the maximum frequency towards the actual frequency until the correct value is detected. Thereafter, the output frequency will be increased/decreased to the set reference value according to the set acceleration/deceleration parameters.

Use this mode if the motor is coasting when the start command is given. With the flying start it is possible to ride through short utility voltage interruptions.

402 Stop Function

Coasting:

0 The motor coasts to a halt without any control from the drive, after the Stop command.

Ramp:

1 After the Stop command, the speed of the motor is decelerated according to the set deceleration parameters. If the regenerated energy is high it may be necessary to use an external braking resistor for faster deceleration.

403 Brake chopper

0 No brake chopper used

1 Brake chopper in use and tested when running. Can be tested also in READY state

2 External brake chopper (no testing)

3 Used and tested in READY state and when running

4 Used when running (no testing)

When the drive is decelerating the motor, the energy stored in the inertia of the motor and the load is fed into an external brake resistor. This enables the drive to decelerate the load with a torque equal to that of acceleration (provided that the correct brake resistor has been selected). See the separate Brake resistor installation manual.

404 Acceleration/Deceleration ramp shape Used when not in Auto Mode

The start and end of the acceleration and deceleration ramps can be smoothed with these parameters. Setting a value of 0.0 gives a linear ramp shape which causes acceleration and deceleration to react immediately to the changes in the reference signal.

Setting a value from 0.1 – 10 seconds for this parameter produces S-shaped acceleration/deceleration. The acceleration time is determined with ID103 and ID104.

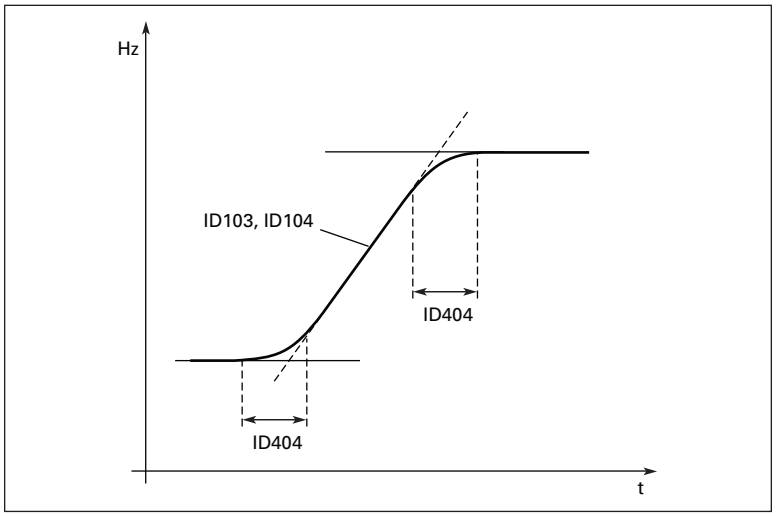

Figure 15-11: Acceleration/Deceleration (S-shaped)

501 Prohibit frequency area 1; Low limit

502 Prohibit frequency area 1; High limit

In some systems it may be necessary to avoid certain frequencies because of mechanical resonance problems. With these parameters limits are set for the “skip frequency” regions. See **Figure 15-12**.

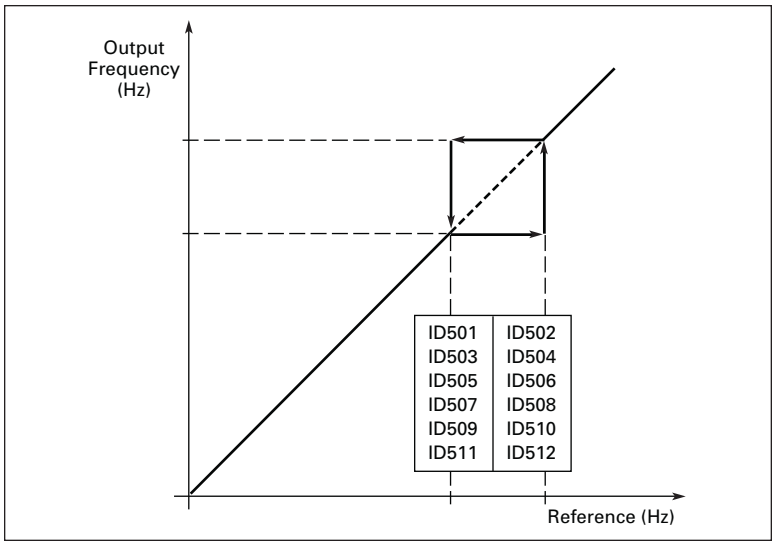

Figure 15-12: Example of Prohibit Frequency Area Setting

503 Prohibit frequency area 2; Low limit

504 Prohibit frequency area 2; High limit

505 Prohibit frequency area 3; Low limit

506 Prohibit frequency area 3; High limit

507 Prohibit frequency area 4; Low limit

508 Prohibit frequency area 4; High limit

509 Prohibit frequency area 5; Low limit

510 Prohibit frequency area 5; High limit

511 Prohibit frequency area 6; Low limit

512 Prohibit frequency area 6; High limit

513 Acceleration/deceleration ramp speed scaling ratio between prohibit frequency limits

Defines the acceleration/deceleration time when the output frequency is between the selected prohibit frequency range limits (ID501 and ID502). The ramping speed (selected acceleration/deceleration time 1 or 2) is multiplied with this factor. E.g. value 0.1 makes the acceleration time 10 times shorter than outside the prohibit frequency range limits.

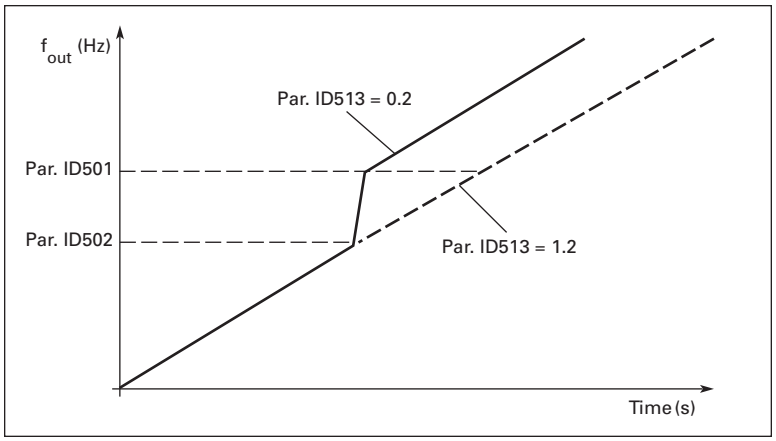

Figure 15-13: Ramp Speed Scaling between Prohibit Frequencies

601 Motor control mode

0	Frequency control: The I/O terminal and keypad references are frequency references and the drive controls the output frequency (output frequency resolution = 0.01 Hz)
1	Speed control: The I/O terminal and keypad references are speed references and the drive controls the motor speed compensating for motor slip (accuracy ± 0.5%).

602 V/Hz optimization

Automatic torque boost The voltage to the motor changes automatically which makes the motor produce sufficient torque to start and run at low frequencies. The voltage increase depends on the motor type and rating. Automatic torque boost can be used in applications where starting torque due to starting friction is high, e.g. in conveyors.

Example 1:

What changes are required to start the load from 0 Hz?

- First set the motor nominal values (Parameter group 1.1).

Option 1: Activate the Automatic torque boost.

Option 2: Programmable V/Hz curve

To obtain the required torque, the zero point voltage and midpoint voltage/frequency (in parameter group 1.6) need to be set, so that the motor can draw enough current at the low frequencies. First set parameter ID603 to *Programmable V/Hz curve* (value **2**). Increase the zero point voltage (ID608) to get enough current at zero speed. Then set the midpoint voltage (ID607) to 1.4142*ID608 and the midpoint frequency (ID606) to ID606/100%*ID111.

Note: In high torque — low speed applications — it is likely that the motor will overheat. If the motor has to run a prolonged time under these conditions, special attention must be paid to cooling the motor. Use external cooling for the motor if the temperature tends to rise too high.

603 V/Hz ratio selection

Linear:

0 The voltage of the motor changes linearly with the frequency in the constant flux area from 0 Hz to the field weakening point where the nominal voltage is supplied to the motor. A linear V/Hz ratio should be used in constant torque applications. **This default setting should be used if there is no special need for another setting**.

Squared:

1 The voltage of the motor changes following a squared curve form with the frequency in the area from 0 Hz to the field weakening point where the nominal voltage is supplied to the motor. The motor runs under magnetized below the field weakening point and produces less torque and electromechanical noise. A squared V/Hz ratio can be used in applications where the torque demand of the load is proportional to the square of the speed, e.g. in centrifugal fans and pumps.

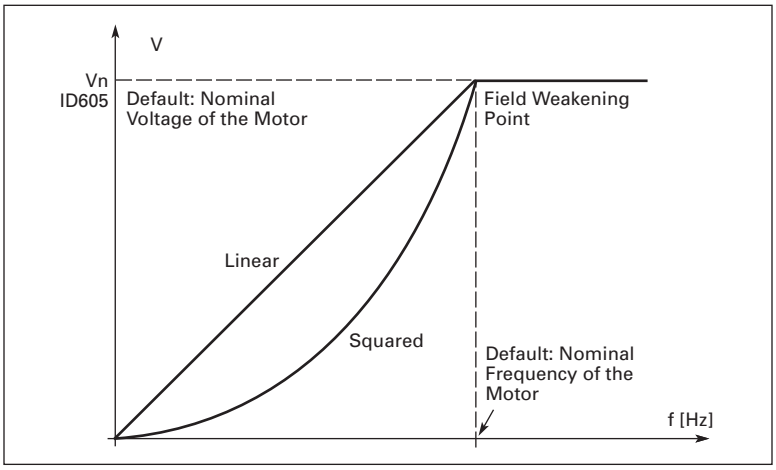

Figure 15-14: Linear and Squared V/Hz Ratio

Programmable V/Hz curve:

2 The V/Hz curve can be programmed with three different points. A programmable V/Hz curve can be used if the other settings do not satisfy the needs of the application.

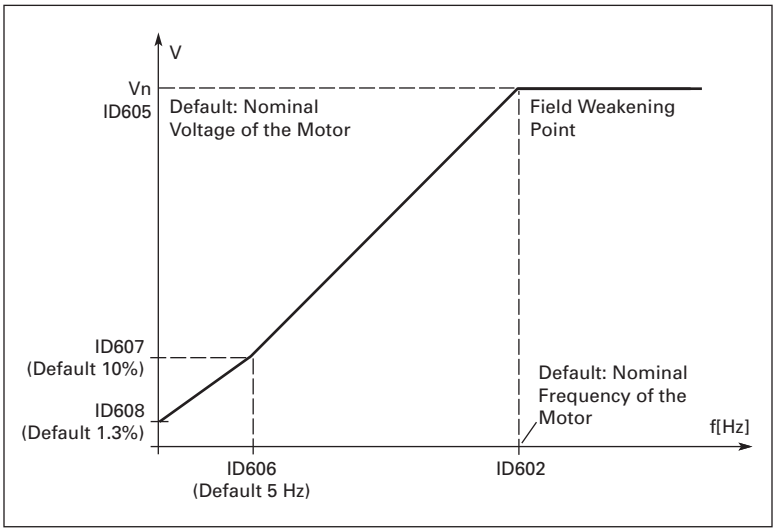

Figure 15-15: Programmable V/Hz Curve

Linear with flux optimization:

3 The drive starts to search for the minimum motor current in order to save energy, lower the disturbance level and the noise. This function can be used in applications with constant motor load, such as fans, pumps etc.

604 Field weakening point

The field weakening point is the output frequency at which the output voltage reaches the set (ID605) maximum value.

605 Voltage at field weakening point

Above the frequency at the field weakening point, the output voltage remains at the set maximum value. Below the frequency at the field weakening point, the output voltage depends on the setting of the V/Hz curve parameters. See ID109, ID108, ID606 and ID607.

When ID105 and ID106 (nominal voltage and nominal frequency of the motor) are set, ID604 and ID605 are automatically set to the corresponding values. If you need different values for the field weakening point and the maximum output voltage, change these parameters **after** setting ID105 and ID106.

606 V/Hz curve, middle point frequency

If the programmable V/Hz curve has been selected with ID108, this parameter defines the middle point frequency of the curve. See **Figure 15-15**.

607 V/Hz curve, middle point voltage

If the programmable V/Hz curve has been selected with the ID108, this parameter defines the middle point voltage of the curve. See **Figure 15-15**.

608 Output voltage at zero speed

If the programmable V/Hz curve has been selected with the ID108, this parameter defines the zero frequency voltage of the curve. See **Figure 15-15**.

609 Switching frequency

Motor noise can be minimized using a high switching frequency. Increasing the switching frequency reduces the rating of the drive. The range of switching frequencies is dependent upon the horsepower size of the drive:

Table 15-4: Size-Dependent Switching Frequencies

Type	Min. [kHz]	Max. [kHz]	Default [kHz]
230V: 1 – 20 hp 480V: 1-1/2 – 40 hp	1.0	16.0	3.6
230V: 25 – 40 hp 480V: 50 – 250 hp	1.0	10.0	3.6

610 Overvoltage controller

This parameter (and ID611) allows the overvoltage (undervoltage) controller to be switched out of operation. This may be useful, for example, if the utility supply voltage varies more than -15% to +10% and the application will not tolerate the overvoltage (undervoltage). When on, this controller adjusts the output frequency based on the supply voltage fluctuations.

Note: An overvoltage trip may occur if the controller is switched off.

0	Controller switched off
1	Controller switched on (no ramping) = Minor adjustments of OP frequency are made
2	Controller switched on (with ramping) = Controller adjusts OP freq. up to max. freq.

611 Undervoltage controller

See ID610.

Note: An undervoltage trip may occur if the controller is switched off.

0	Controller switched off
1	Controller switched on

612 Identification

Identification run is a part of tuning the motor and the drive specific parameters. It is a tool for commissioning and service of the drive with the aim to find the best parameter values possible for most drives. The automatic motor identification calculates or measures the motor parameters that are needed for optimum motor and speed control.

0	No action — No identification requested
1	Identification without motor run — The drive is run without speed to identify the motor parameters. The motor is supplied with current and voltage but with zero frequency.
2	Identification with motor run — The drive is run with speed to identify the motor parameters. **Note:** It is recommended that the identification test is done with no load on the motor for best results.

701 Input phase supervision

0	No response
1	Warning
2	Fault, stop mode after fault according to ID402

The input phase supervision ensures that the input phases of the drive have approximately equal currents.

702 Response to the 4 mA reference fault

0 No response
1 Warning
2 Fault, stop mode after fault according to ID402

A warning or a fault action and message is generated if the 4 – 20 mA reference signal is used and the signal falls below 3.5 mA for 5 seconds or below 0.5 mA for 0.5 seconds. The information can also be programmed into digital output DO-1 or relay outputs RO-1 and RO-2.

703 Response to external fault

0 No response
1 Warning
2 Fault, stop mode after fault according to ID402

A warning or a fault action and message is generated from the external fault signal applied to programmable digital input DI-3. The information can also be programmed into digital output DO-1 or relay outputs RO-1 and RO-2.

704 Response to fieldbus fault

This sets the response mode for the fieldbus fault when a fieldbus board is used. For more information, see the respective Fieldbus Board Manual.

705 Response to slot fault

This sets the response mode for a board slot fault caused by a missing or failed board.

706 Automatic restart

The Automatic restart is used when this parameter is enabled.

0 Disabled
1 Automatically transferred to Bypass
2 Reset drive only
3 Reset drive, if fails, then transferred to Bypass

The function resets the following faults (max. three times every 5 seconds) (see **Appendix B**):

- Overcurrent (F1)
- Overvoltage (F2)
- Undervoltage (F9)
- Drive overtemperature (F14)
- Motor overtemperature (F16)
- Reference fault (F50)
- Saturation trip (F7)
- Motor underload (F17)
- IGBT temperature hardware (F31)
- IGBT temperature software (F41)

707 Motor Thermal Protection

0	No response
1	Warning
2	Fault, stop mode after fault according to ID402
3	Fault, stop mode after fault always by coasting

If tripping is selected the drive will stop and activate the fault stage. Deactivating the protection, ie. setting parameter to 0, will reset the thermal stage of the motor to 0%.

708 Motor Thermal Protection: Motor Ambient Temperature Factor

The factor can be set between -100.0% – 100.0%.

709 Motor Thermal Protection: Motor Cooling Factor at Zero Speed

The current can be set between 0 – 150.0% x I_{nmotor}. This parameter sets the value for thermal current at zero frequency. See **Figure 15-16**.

The default value is set assuming that there is no external fan cooling the motor. If an external fan is used, this parameter can be set to 90% (or even higher).

Note: The value is set as a percentage of the motor nameplate data, ID108 (Nominal current of motor), not the drive's nominal output current. The motor's nominal current is the current that the motor can withstand in direct on-line use without being overheated.

If nominal current of motor (ID108) is changed, this parameter is automatically restored to the default value. Setting this parameter does not affect the maximum output current of the drive, which is determined by ID107 alone.

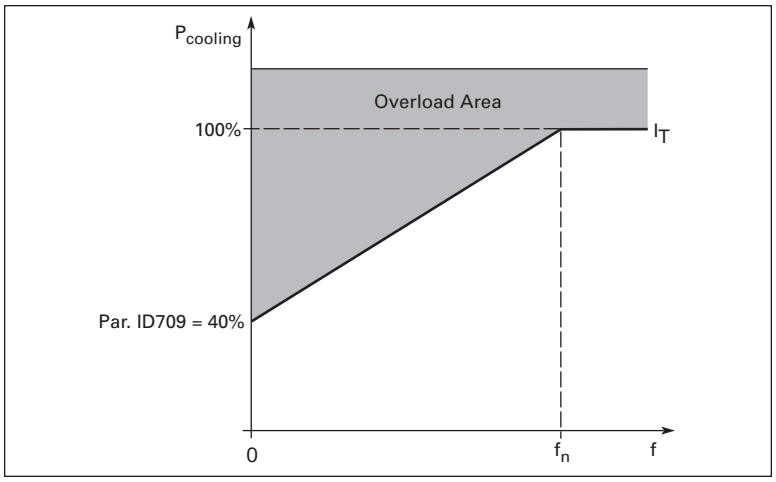

Figure 15-16: Motor Thermal Current I_T Curve

710 Motor Thermal Protection: Time Constant

This time can be set between 1 and 200 minutes.

This is the thermal time constant of the motor. The bigger the motor, the bigger the time constant. The time constant is the time within which the calculated thermal stage has reached 63% of its final value.

If the motor's t6-time (t6 is the time in seconds the motor can safely operate at six times the rated current) is known (given by the motor manufacturer) the time constant in minutes is equal to 2xt6. If the drive is in stop stage, the time constant is internally increased to three times the set parameter value. Cooling in the stop stage is based on convection and the time constant is increased. See **Figure 15-17**.

711 Motor Thermal Protection: Motor Duty Cycle

Define how much of the nominal motor load is applied. The value can be set to 0% – 100%.

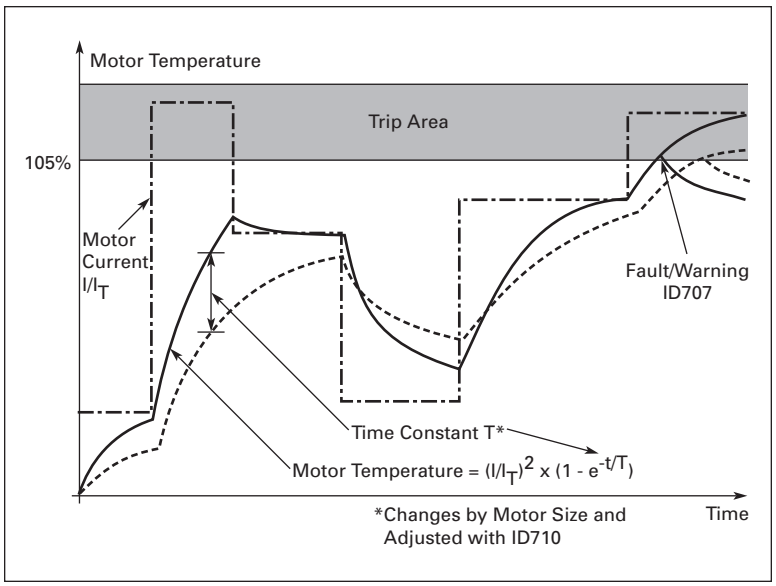

Figure 15-17: Motor Temperature Calculation

712 Stall Protection

0	No response
1	Warning
2	Fault, stop mode after fault according to ID402
3	Fault, stop mode after fault always by coasting

Setting the parameter to 0 will deactivate the protection and reset the stall time counter.

713 Stall Current Limit

The current can be set to 0.0 – 2*I_H. For a stall stage to occur, the current must have exceeded this limit. See **Figure 15-18**. The software does not allow entering a greater value than 2*I_H. If ID107 (nominal current limit of motor) is changed, this parameter is automatically calculated to 90% of the current limit.

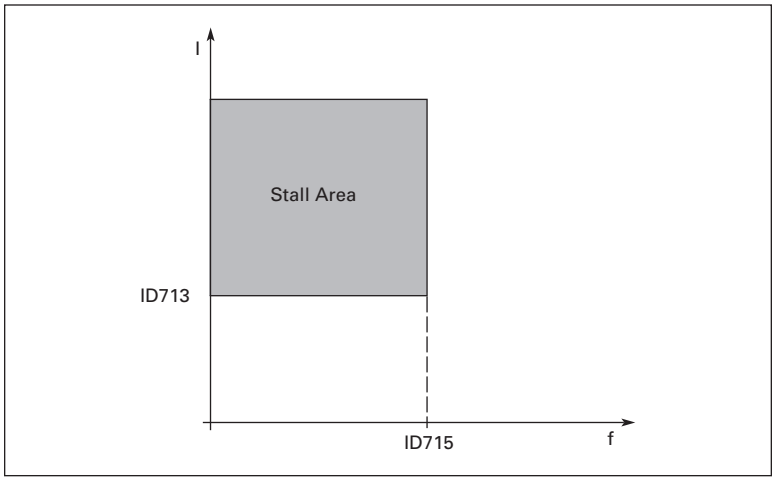

Figure 15-18: Stall Characteristics Settings

714 Stall Time

This time can be set between 1.0 and 120.

This is the maximum time allowed for a stall stage. The stall time is counted by an internal up/down counter. If the stall time counter value goes above this limit, the protection will cause a trip (see ID712).

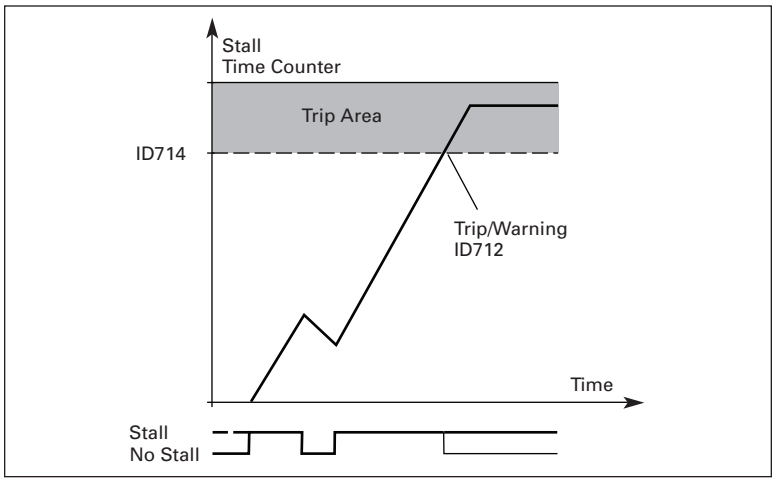

Figure 15-19: Stall Time Count

715 Stall Frequency Limit

The frequency can be set between 1 – f_{max} (ID102). For a stall state to occur, the output frequency must remain below this limit.

716 Underload Protection

0	No response
1	Warning
2	Fault, stop mode after fault according to ID402
3	Fault, stop mode after fault always by coasting

If tripping is set active the drive will stop and activate the fault stage. Deactivating the protection by setting the parameter to 0 will reset the underload time counter to zero.

717 Underload Protection, Field Weakening Area Load

The torque limit can be set between 10.0 – 150.0% x T_{nMotor}.

This parameter gives the value for the minimum torque allowed when the output frequency is above the field weakening point. See **Figure 15-20**.

If you change ID108 (motor nominal current), this parameter is automatically restored to the default value.

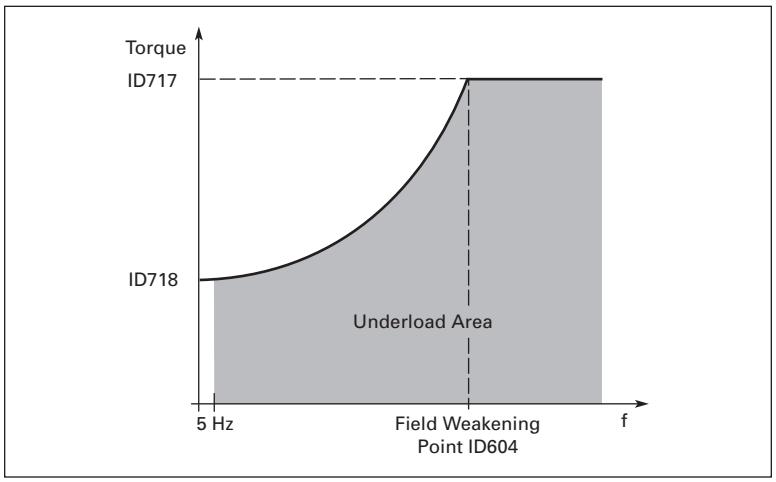

Figure 15-20: Setting of Minimum Load

718 Underload Protection, Zero Frequency Load

The torque limit can be set between 5.0 – 150.0% x T_{nMotor}.

This parameter gives the value for the minimum torque allowed with zero frequency. See **Figure 15-20**.

If you change ID108 (motor nominal current), this parameter is automatically restored to the default value.

719 Underload Time

This time can be set between 2.0 and 600.0 sec.

This is the maximum time allowed for an underload state to exist. An internal up/down counter counts the accumulated underload time. if the underload counter value goes above this limit, the protection will cause a trip according to ID716. If the drive is stopped, the underload counter is reset to zero. See **Figure 15-21**.

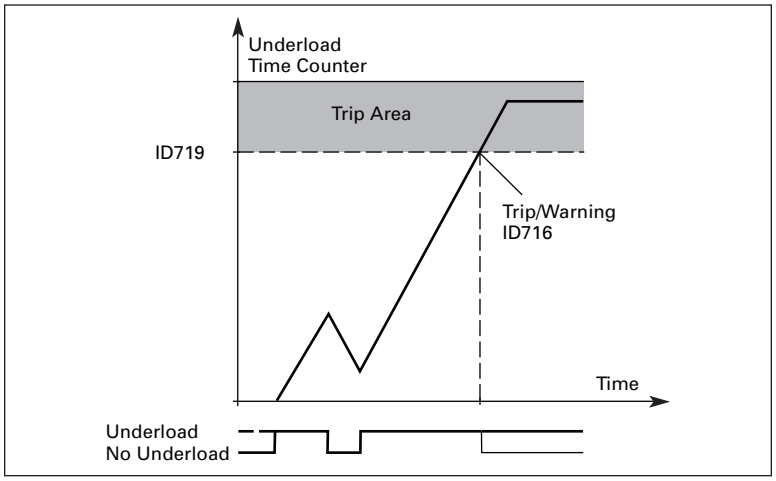

Figure 15-21: Underload Time Counter Function

804 Fire Mode Function

Fire Mode is used to start motor and continue to operate due to emergency conditions. Faults will be changed to warnings to prevent shutdown. The overload should be selected to AUTO to prevent overload trip during "Fire Mode" operation. This is only required if unit is an IntelliPass bypass which uses an electronic overload with contactor to run motor. If set to AUTO on the overload, the overload fault will be ignored and motor will continue to run.

⚠ IMPORTANT

The electronic overload on the contactor must be set to AUTO, otherwise the overload will function normally.

Note: (1) Fire Mode has no effect on Bypass operation.
(2) Removing the "Fire Mode" digital input will return the drive to normal operation.

This parameter determines whether the fire mode function is determined by a contact closure or contact opening on digital input.

- Closing contact initiates fire mode function. Option 9 in digital input parameter.
- Opening contact initiates fire mode function. Option 14 in digital input parameter.

Fire Mode Speed Reference

Parameter P1.7.20 sets the drive's fire mode speed.

1001 to 1008 Fieldbus Data Out

These parameters can be used to send parameter or monitoring values to fieldbus. The values can be selected by using ID numbers.

Table 15-5: Fieldbus Parameters

ID	Data	Default	Description	Unit
1001	FB Data Out 1 Select	1	Actual Speed	rpm
1002	FB Data Out 2 Select	5	Motor Current	A
1003	FB Data Out 3 Select	8	Motor Voltage	V
1004	FB Data Out 4 Select	7	Motor Power	%
1005	FB Data Out 5 Select	9	DC Bus Voltage	V
1006	FB Data Out 6 Select	20	Status Word	—
1007	FB Data Out 7 Select	18	Active Fault Code	—
1008	FB Data Out 8 Select	19	Active Warning Code	—

1011 PI Setpoint Default

PI-regulators default setpoint. This parameter is set with Start-Up Wizard. Parameter not available in Remote Input application.

1101 US/Metric Units

(Duct, building, pressure and temperature applications only.)

0 US units
1 Metric units

1102 PI Setpoint Min. Limit Default: Same value as ID1107.

PI Setpoint limitation minimum value.

1103 PI Setpoint Max. Limit Default: Same value as ID1108.

PI Setpoint limitation maximum value.

1104 PI Setpoint Ramp Time

Defines the time during which the PI controller reference rises from 0% to 100% or falls from 100% to 0%.

1106 PI-Controller Input Source

0 AI-1 (control board)
1 AI-2 (control board)
2 Fieldbus (*Actual value 1*: FBProcessDataIN1)
3 Min. Both
4 Max. Both
5 Ave. Both

1107 Sensor Minimum Scale

Feedback sensor minimum output value. See **Figure 15-6**.

1108 Sensor Maximum Scale

Feedback sensor maximum output value. See **Figure 15-6**.

1109 PI controller gain

This parameter defines the gain of the PI controller. If the value of the parameter is set to 1.00 a change of 0.01 in the error value causes the controller output to change by 10%.

1110 PI controller I-time

This parameter defines the integration time of the PI controller. If this parameter is set to 1.00 second, a change of 10% in the error value causes the controller output to change by 10.00%/s. If the parameter value is set to 0.00 s the PI controller will operate as PD controller.

1111 Deadband

Parameter will set ± deadband area for PI controllers error value (Setpoint – Feedback). When inside the deadband area the PI regulation is stopped and the output is frozen to current value.

1112 PI controller acting mode

This parameter allows you to invert the error value of the PI controller (and thus the operation of the PI controller).

0	Forward Acting
1	Reverse Acting

1113 Acceleration time auto mode

Output frequency acceleration time in auto mode.

1114 Deceleration time auto mode

Output frequency deceleration time in auto mode.

1115 Auto Acceleration/Deceleration ramp shape — Used in Auto Mode and PI control is NOT active

The start and end of the acceleration and deceleration ramps can be smoothed with these parameters. Setting a value of 0.0 gives a linear ramp shape which causes acceleration and deceleration to react immediately to the changes in the reference signal.

Setting a value from 0.1 – 10 seconds for this parameter produces S-shaped acceleration/deceleration. The acceleration time is determined with ID1113 and ID1114.

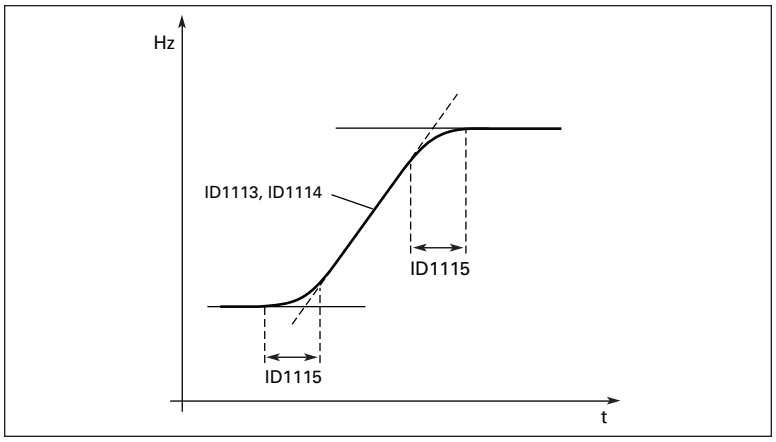

Figure 15-22: Auto Acceleration/Deceleration (S-shaped)

Keypad Control Parameters

Unlike the parameters listed above, these parameters are located in the **M2** menu of the control keypad. The keypad reference and PI setpoint parameters do not have ID numbers.

1009 Keypad direction

0 Forward: The rotation of the motor is forward, when the keypad is the active control place.

1 Reverse: The rotation of the motor is reverse, when the keypad is the active control place.

For more information, see **Chapter 6**, Keypad Control Menu (M2).

1010 STOP button activated

To make the STOP button a “hotspot” which always stops the drive regardless of the selected control place, set the value of this parameter to **1**.

R2.1 Keypad reference

The frequency reference can be adjusted from the keypad with this parameter.

The output frequency can be copied as the keypad reference by pushing the STOP button for 3 seconds when you are on any of the pages of menu **M2**. For more information, see **Chapter 6**, Keypad Control Menu (M2).

R2.4 PI Setpoint

The PI controller keypad reference can be set between 0% and 100%. This reference value is the active PI reference if ID115 = 2. Units are application dependent.

1701 to 1707 Preset Speed

Digital Input(s) for …			Status
Preset Speed 1	**Preset Speed 2**	**Preset Speed 3**	
0	0	0	OFF
1	0	0	Preset Speed 1
0	1	0	Preset Speed 2
1	1	0	Preset Speed 3
0	0	1	Preset Speed 4
1	0	1	Preset Speed 5
1	1	0	Preset Speed 6
1	1	1	Preset Speed 7

Table 15-6: Preset Speeds

Code	Parameter	Min.	Max.	Unit	Step	Default	ID Number	Description
P1.10.1	Preset Speed 1	0	100.0	%	0.1	30.0	1701	Preset speeds when Digital Inputs are programmed
P1.10.2	Preset Speed 2	0	100.0	%	0.1	40.0	1702	
P1.10.3	Preset Speed 3	0	100.0	%	0.1	50.0	1703	
P1.10.4	Preset Speed 4	0	100.0	%	0.1	60.0	1704	
P1.10.5	Preset Speed 5	0	100.0	%	0.1	70.0	1705	
P1.10.6	Preset Speed 6	0	100.0	%	0.1	80.0	1706	
P1.10.7	Preset Speed 7	0	100.0	%	0.1	90.0	1707	

Appendix A — Technical Data

Specifications

Table A-1: VSD Series Drive Specifications

Description	Specification
Power Connections	
Input Voltage (V_{in})	230V +10%/-15% 480V +10%/-15% 575V +10%/-15%
Input Frequency (f_{in})	50/60 Hz (variation up to 45 – 66 Hz)
Connection to Utility Power	Once per minute or less (typical operation)
High Interrupt Rating	The current withstand rating of the drive is 100,000 Amperes When Freedom Starters and an HMCP, the current interrupting rating is 100,000 Amperes When used with ***IT***. style starters, the current interrupting rating is 36,000 Amperes
Motor Connections	
Output Voltage	0 to V_{in}
Continuous Output Current	Ambient temperature max. +104°F (+40°C), overload 1.1 x I_L (1 min./10 min.)
Starting Torque	110%
Output Frequency	0 to 320 Hz
Frequency Resolution	0.01 Hz
Control Characteristics	
Control Method	Frequency Control (V/f) Open Loop Sensorless Vector Control
Switching Frequency	Adjustable with ***Switching Frequency*** 230V: 1 – 20 hp: 1 to 16 kHz; default 3.6 kHz 25 – 40 hp: 1 to 10 kHz; default 3.6 kHz 480V: 1 – 40 hp: 1 to 16 kHz; default 3.6 kHz 50 – 250 hp: 1 to 10 kHz; default 3.6 kHz 575V: All hp: 1 to 6 kHz; default 1.5 kHz
Frequency Reference	Analog Input: Resolution 0.1% (10-bit), accuracy ±1% Panel Reference: Resolution 0.01 Hz
Field Weakening Point	30 to 320 Hz
Acceleration Time	0.1 to 3000 sec.
Deceleration Time	0.1 to 3000 sec.
Braking Torque	DC brake: 15% to 150% x T_n (without brake option)
Environment	
Ambient Operating Temperature	14°F (-10°C), no frost to 104°F (+40°C)
Storage Temperature	-40°F (-40°C) to 158°F (70°C)
Relative Humidity	0 to 95% RH, noncondensing, non-corrosive, no dripping water
Air Quality	Chemical vapors: IEC 60721-3-3, unit in operation, class 3C2 Mechanical particles: IEC 60721-3-3, unit in operation, class 3S2
Altitude	100% load capacity (no derating) up to 3300 ft. (1000m); 1% derating for each 330 ft. (100m) above 3300 ft. (1000m); max. 10000 ft. (3000m)

Table A-1: VSD Series Drive Specifications (Continued)

Description	Specification
Environment, continued	
Vibration	EN 50178, EN 60068-2-6 5 to 50 Hz, displacement amplitude 1 mm (peak) at 3 to 15.8 Hz, Max. acceleration amplitude 1 G at 15.8 to 150 Hz
Shock	EN 50178, EN 60068-2-27 UPS Drop test (for applicable UPS weights) Storage and shipping: max. 15 G, 11 ms (in package)
Enclosure Class	TYPE 1/IP21 standard 250 hp and below Open chassis standard 300 hp and above
Standards	
EMC (at default settings)	Immunity: Fulfils all EMC immunity requirements Emissions: EN 61800-3
Safety	UL 508C
Product	IEC 61800-2
Control Connections	
Analog Input Voltage	0 to 10V, R - 200W differential (-10 to 10V joystick control) Resolution 0.1%; accuracy ±1%
Analog Input Current	0(4) to 20 mA; R_i – 250W differential
Digital Inputs (6)	Positive or negative logic; 18 to 24V DC
Auxiliary Voltage	24V DC ±15%, max. 250 mA
Output Reference Voltage	+10V +3%, max. load 10 mA
Analog Output	0(4) to 20 mA; R_L max. 500W ; Resolution 10 bit; Accuracy ±2% or 0 to 10V, R_L 1 kW , select with jumper
Digital Outputs	Open collector output, 50 mA/48V
Relay Outputs	2 programmable Form C relay outputs Switching capacity: 24V DC / 8A, 250V AC / 8A, 125V DC / 0.4A Minimum switching load: 5V/10 mA Continuous capacity: <2 A_{rms}
Protections	
Overcurrent Protection	Yes
Overvoltage Protection	Yes
Undervoltage Protection	Yes
Ground (Earth) Fault	In case of a ground fault in motor or motor cables, only the VSD Series is protected
Input Phase Supervision	Trips if any of the input phases are missing
Motor Phase Supervision	Trips if any of the output phases are missing
Overtemperature Protection	Yes
Motor Overload Protection	Yes
Motor Stall Protection	Yes
Motor Underload Protection	Yes
Short Circuit Protection of the 24V DC and +10V DC Reference Voltages	Yes
Programmable Automatic Restart Options	Yes — Disable; Automatically transferred to Bypass; Reset drive only; Reset drive, if fails, then transferred to Bypass

Power Ratings

Table A-2: 230V VT Output Power Ratings

Catalog Number ①	Frame Size	Three-Phase Input	
		Horsepower	Current
VS0012x0A_	FR4	1	4.8
VSF152x0A_		1-1/2	6.6
VS0022x0A_		2	7.8
VS0032x0A_		3	11
VS0052x0A_	FR5	5	17.5
VS0072x0A_		7-1/2	25
VS0102x0A_		10	31
VS0152x0A_	FR6	15	48
VS0202x0A_		20	61
VS0252x0A_	FR7	25	75
VS0302x0A_		30	88
VS0402x0A_		40	114
VS0502x0A_	FR8	50	140
VS0602x0A_		60	170
VS0752x0A_		75	205
VS1002x0A_	FR9	100	261

① Insert a “1” for TYPE 1 or a “2” for TYPE 12 in place of the “x” in the Catalog Number.

Table A-3: 480V VT Output Power Ratings

Catalog Number ①	Frame Size	Three-Phase Input	
		Horsepower	Current
VSF154x0A_	FR4	1-1/2	3.3
VS0024x0A_		2	4.3
VS0034x0A_		3	5.6
VS0054x0A_		4	7.6
VS0074x0A_		7-1/2	12
VS0104x0A_	FR5	10	16
VS0154x0A_		15	23
VS0204x0A_		20	31
VS0254x0A_	FR6	25	38
VS0304x0A_		30	46
VS0404x0A_		40	61
VS0504x0A_	FR7	50	72
VS0604x0A_		60	87
VS0754x0A_		75	105
VS1004x0A_	FR8	100	140
VS1254x0A_		125	170
VS1504x0A_		150	205
VS2004x0A_	FR9	200	261
VS2504x0A_		250	300

① Insert a “1” for TYPE 1 or a “2” for TYPE 12 in place of the “x” in the Catalog Number.

Table A-4: 575V VT Output Power Ratings

Catalog Number ①	Frame Size	Three-Phase Input	
		Horsepower	Current
VS0035x0A_	FR6	3	4.5
VS0055x0A_		5	7.5
VS0075x0A_		7-1/2	10
VS0105x0A_		10	13.5
VS0155x0A_		15	18
VS0205x0A_		20	22
VS0255x0A_		25	27
VS0305x0A_		30	34
VS0405x0A_	FR7	40	41
VS0505x0A_		50	52
VS0605x0A_	FR8	60	62
VS0755x0A_		75	80
VS1005x0A_		100	100
VS1255x0A_	FR9	125	125
VS1505x0A_		150	144
VS2005x0A_		200	208

① Insert a “1” for TYPE 1 or a “2” for TYPE 12 in place of the “x” in the Catalog Number.

Power Loss and Switching Frequency

In some situations it may be desirable to change the switching frequency of the VSD Series drive for some reason (typically e.g. to reduce the motor noise). Raising the switching frequency above the factory default level increases the drive power loss and increases the cooling requirements. **Figures A-1** through **A-6** illustrate the power loss increase for the different VSD Series models. When operating above the default switching frequency, the VSD Series output current rating should be derated by the ratio of the increased power loss to the nominal power loss.

Example: The user of a 40 hp, 61A, 480V VSD Series drive wishes to increase the switching frequency from the factory default value of 10 kHz to 15 kHz to reduce motor noise. From **Figure A-3** the loss at the factory default switching frequency of 10 kHz is 1240 watts. The loss at 15 kHz from **Figure A-3** is 1340 watts.

$$\text{Re } rate = 61 \times \frac{1240}{1340} = 56\text{A}$$

Thus at the increased switching frequency, the maximum load allowed is 56A to avoid overheating the VSD Series drive.

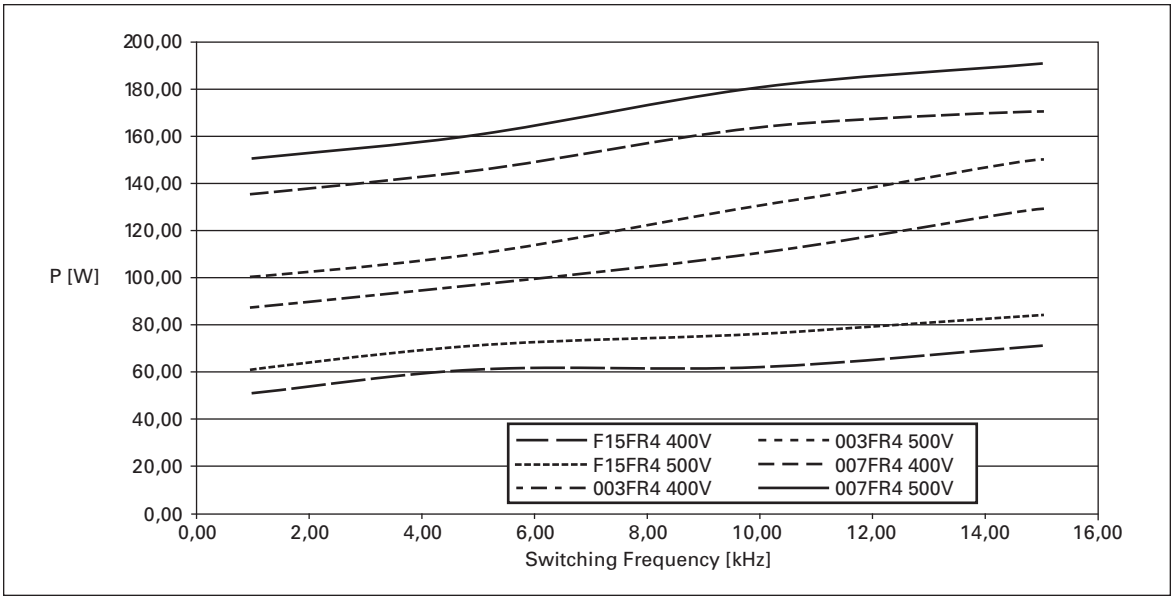

Figure A-1: Power Loss as Function of Switching Frequency: 1 – 3 hp 230V, 1-1/2 – 7-1/2 hp 480V

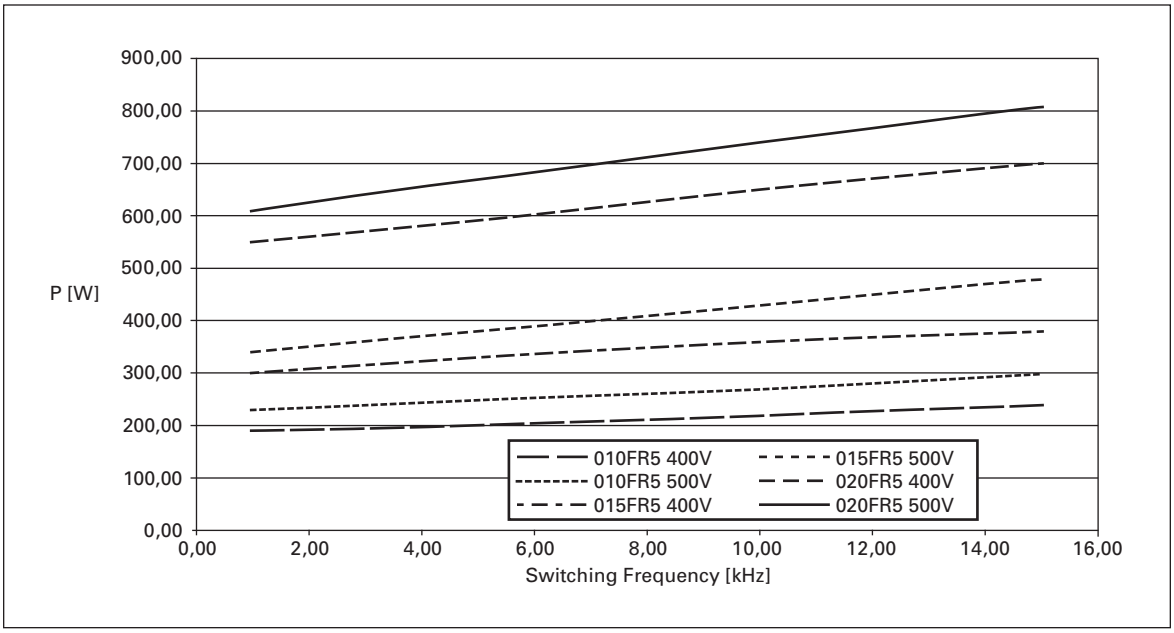

Figure A-2: Power Loss as Function of Switching Frequency: 5 – 10 hp 230V, 10 – 20 hp 480V

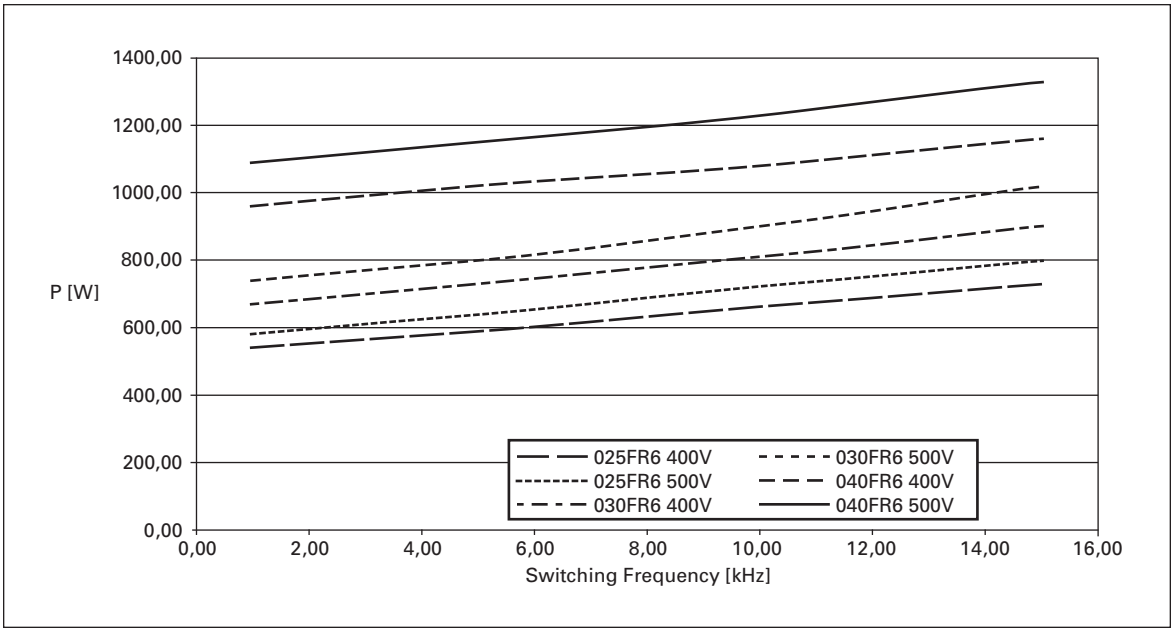

Figure A-3: Power Loss as Function of Switching Frequency: 15 – 20 hp 230V, 25 – 40 hp 480V

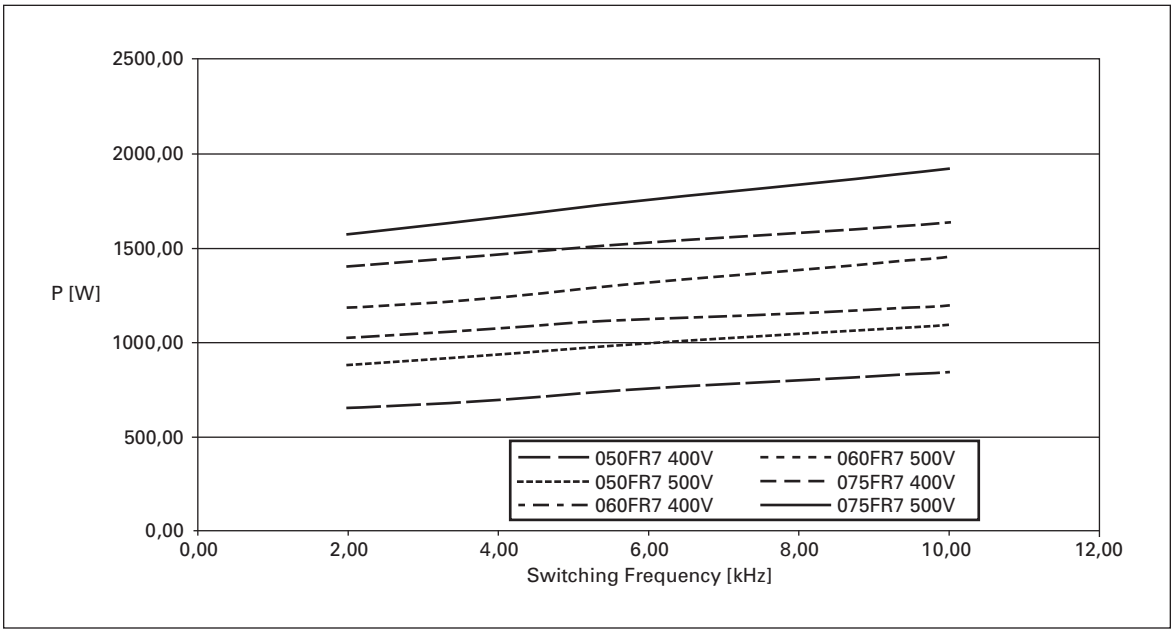

Figure A-4: Power Loss as Function of Switching Frequency: 25 – 40 hp 230V, 50 – 75 hp 480V

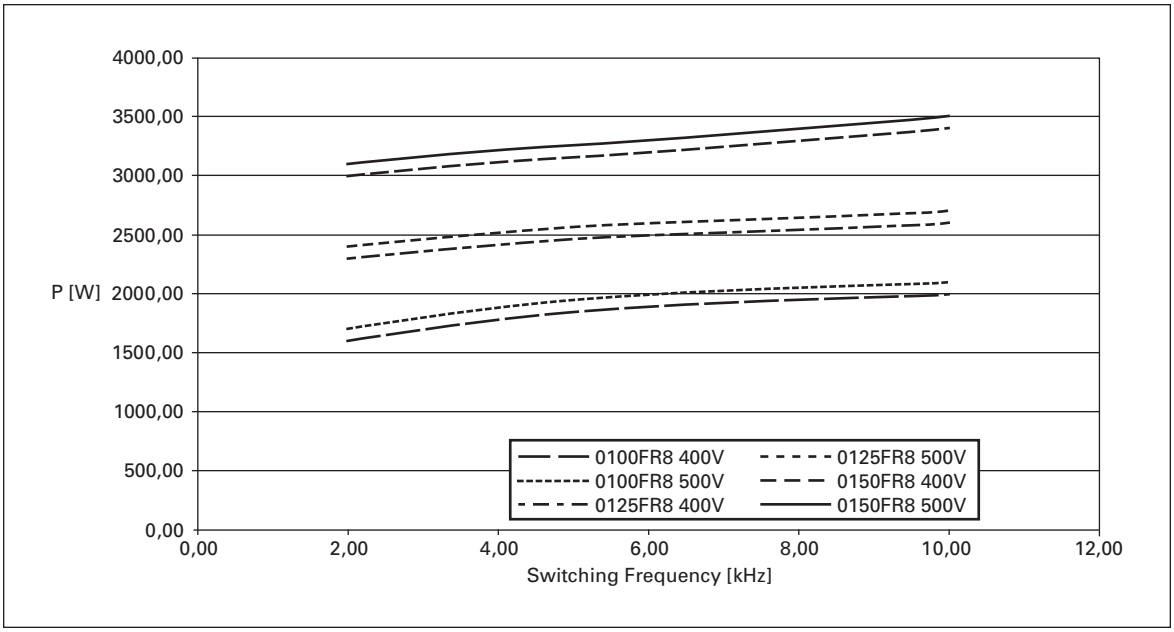

Figure A-5: Power Loss as Function of Switching Frequency: 50 – 75 hp 230V, 100 – 150 hp 480V

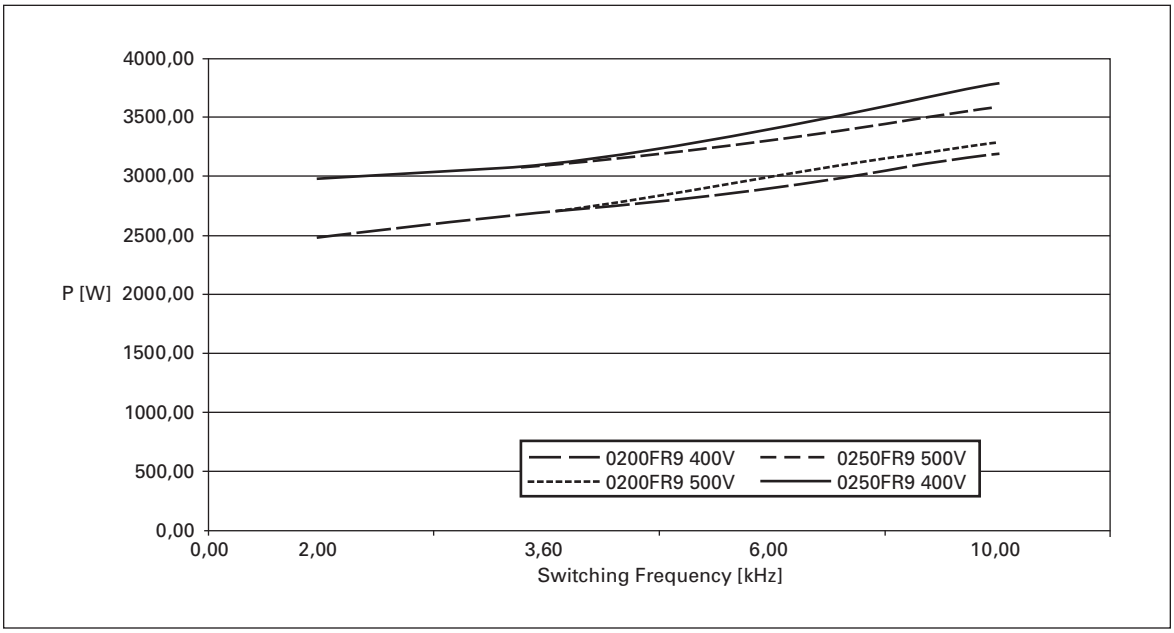

Figure A-6: Power Loss as Function of Switching Frequency: 200 – 250 hp 480V

Dimensions

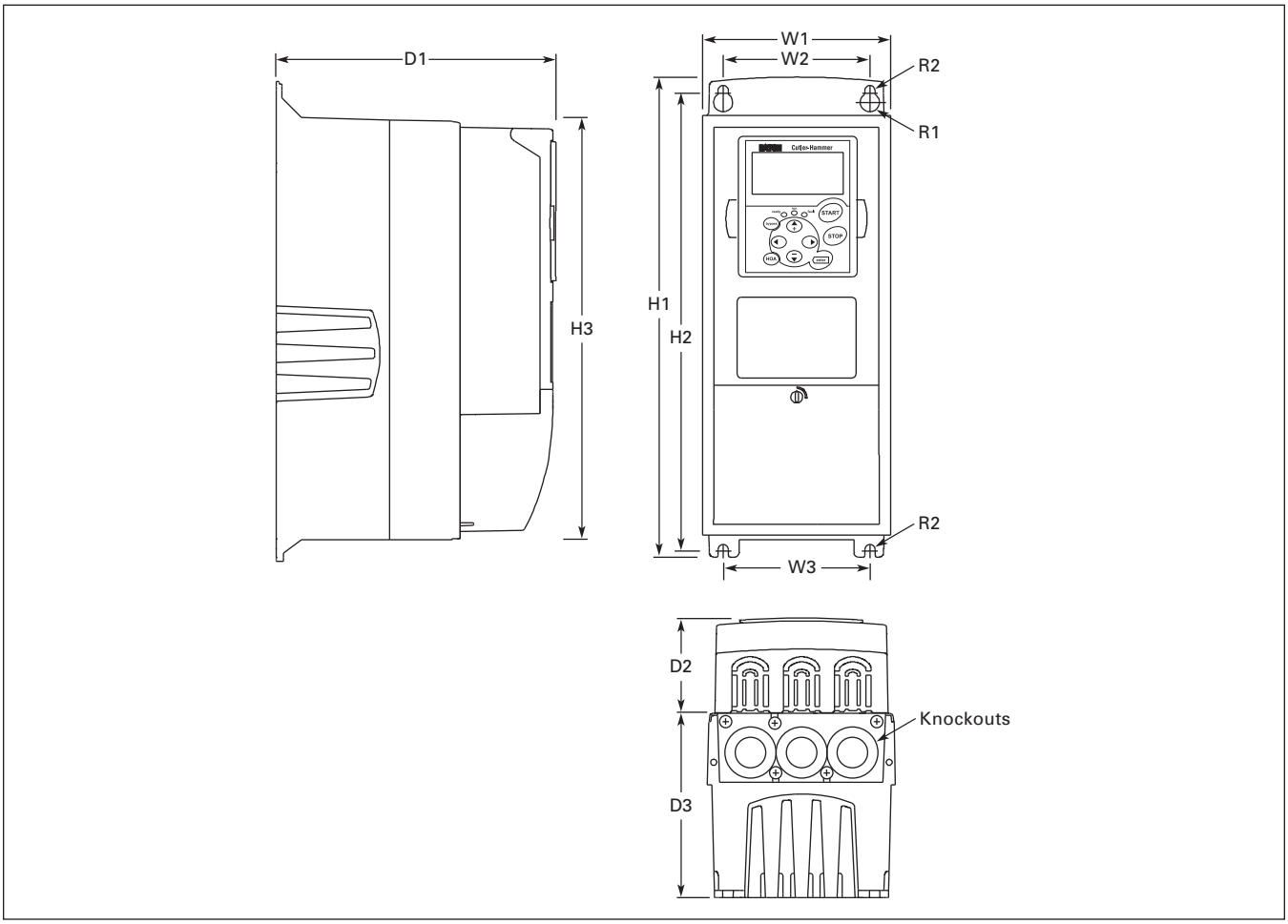

Figure A-7: TYPE 1 and TYPE 12 VSD Series Open Drive Dimensions, FR4, FR5 and FR6

Table A-5: VSD Series Open Drive Dimensions

Frame Size	Voltage	hp (VT)	Approximate Dimensions in Inches (mm)											Weight Lbs. (kg)	Knockouts @ Inches (mm)
			H1	H2	H3	D1	D2	D3	W1	W2	W3	R1 dia.	R2 dia.		N1 (O.D.)
FR4	230V	1 – 3	12.9 (327)	12.3 (313)	11.5 (292)	7.5 (190)	2.5 (64)	5.0 (126)	5.0 (128)	3.9 (100)	—	.5 (13)	.3 (7)	11.0 (5)	3 @ 1.1 (28)
	480V	1-1/2 – 7-1/2													
FR5	230V	5 – 10	16.5 (419)	16.0 (406)	15.4 (391)	8.4 (214)	2.7 (68)	5.7 (148)	5.7 (144)	3.9 (100)	—	.5 (13)	.3 (7)	17.9 (8)	2 @ 1.5 (37) 1 @ 1.1 (28)
	480V	10 – 20													
FR6	230V	15 – 20	22.0 (558)	21.3 (541)	20.4 (519)	9.3 (237)	2.7 (68)	6.7 (171)	7.6 (195)	5.8 (148)	—	.7 (18)	.4 (9)	40.8 (19)	3 @ 1.5 (37)
	480V	25 – 40													
	575V	3 – 30													

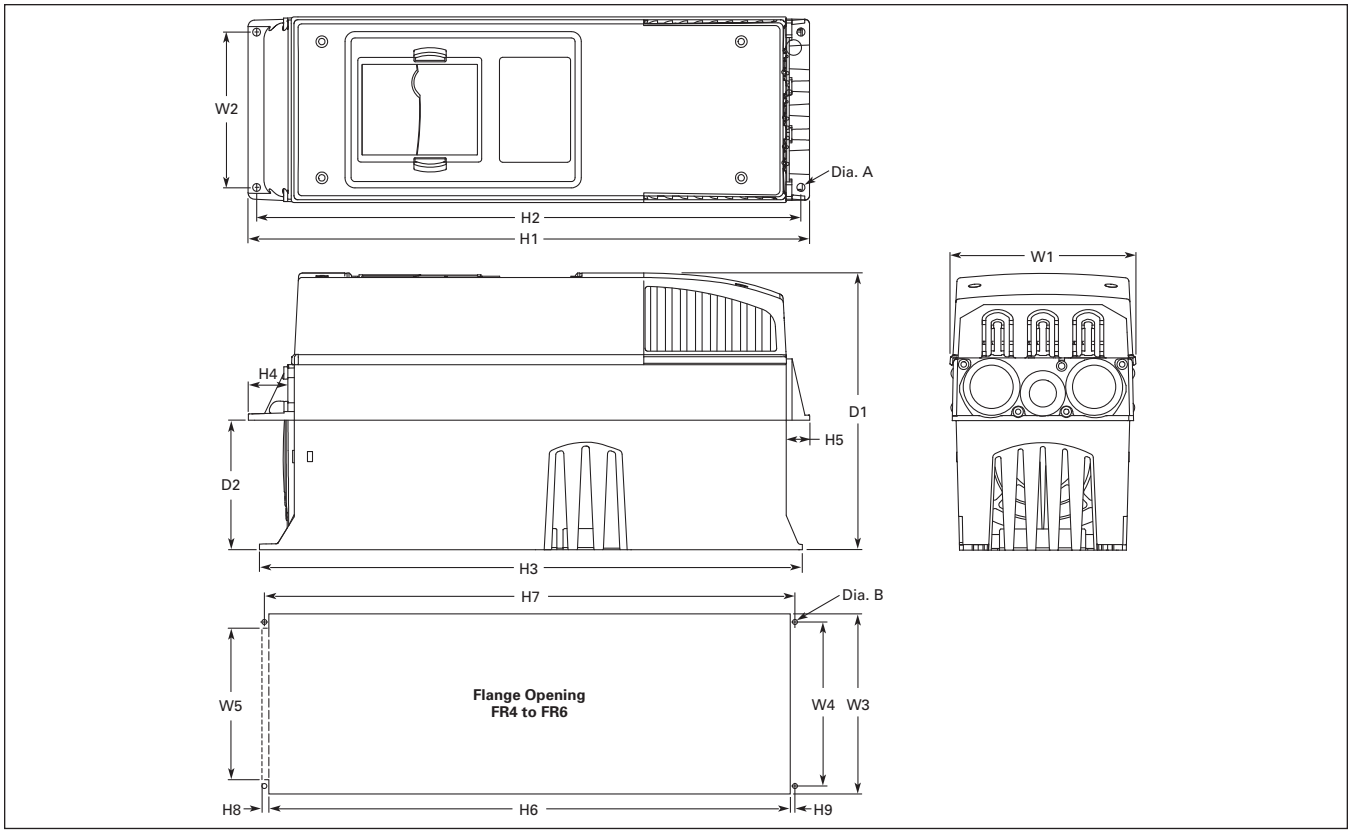

Figure A-8: VSD Series Open Drive Dimensions, TYPE 1 and TYPE 12 with Flange Kit, FR4, FR5 and FR6

Table A-6: Dimensions for VSD Series Open Drive, FR4, FR5 and FR6 with Flange Kit

Frame Size	Voltage	hp (VT)	Approximate Dimensions in Inches (mm)									
			W1	W2	H1	H2	H3	H4	H5	D1	D2	Dia. A
FR4	230V	1 – 3	5.0 (128)	4.5 (113)	13.3 (337)	12.8 (325)	12.9 (327)	1.2 (30)	.9 (22)	7.5 (190)	3.0 (77)	.3 (7)
	480V	1-1/2 – 7-1/2										
FR5	230V	5 – 10	5.7 (144)	4.7 (120)	17.0 (434)	16.5 (420)	16.5 (419)	1.4 (36)	.7 (18)	8.4 (214)	3.9 (100)	.3 (7)
	480V	10 – 20										
FR6	230V	15 – 20	7.7 (195)	6.7 (170)	22.0 (560)	21.6 (549)	22.0 (558)	1.2 (30)	.8 (20)	9.3 (237)	4.2 (106)	.3 (7)
	480V	25 – 40										
	575V	3 – 30										

Table A-7: Dimensions for the Flange Opening, FR4 to FR6

Frame Size	Voltage	hp (VT)	Approximate Dimensions in Inches (mm)							
			W3	W4	W5	H6	H7	H8	H9	Dia. B
FR4	230V	1 – 3	4.8 (123)	4.5 (113)	—	12.4 (315)	12.8 (325)	—	.2 (5)	.3 (7)
	480V	1-1/2 – 7-1/2								
FR5	230V	5 – 10	5.3 (135)	4.7 (120)	—	16.2 (410)	16.5 (420)	—	.2 (5)	.3 (7)
	480V	10 – 20								
FR6	230V	15 – 20	7.3 (185)	6.7 (170)	6.2 (157)	21.2 (539)	21.6 (549)	.3 (7)	.2 (5)	.3 (7)
	480V	25 – 40								
	575V	3 – 30								

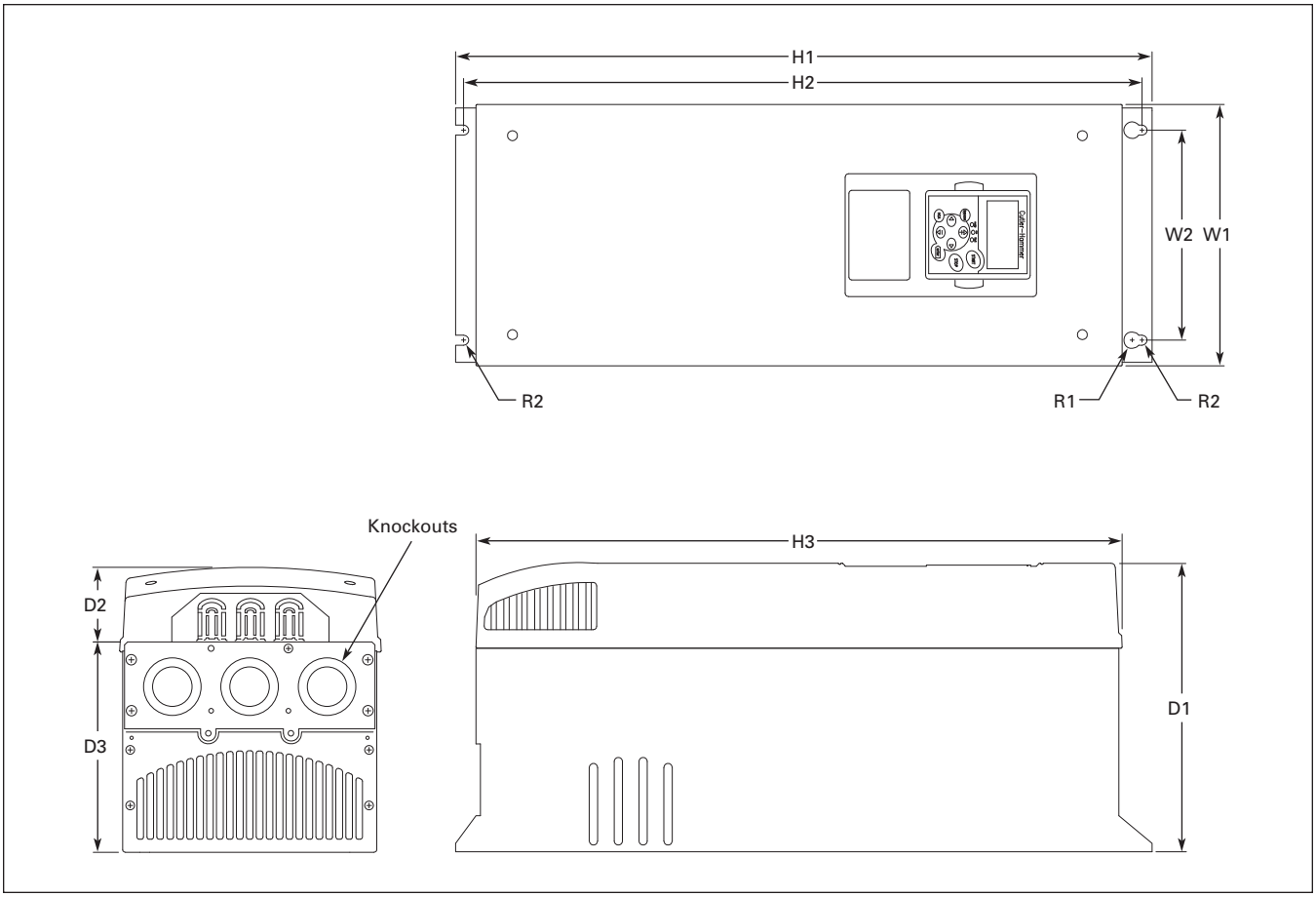

Figure A-9: VSD Series Open Drive Dimensions, TYPE 1 and TYPE 12, FR7

Table A-8: VSD Series Open Drive Dimensions, FR7

Frame Size	Voltage	hp (VT)	Approximate Dimensions in Inches (mm)										Weight Lbs. (kg)	Knockouts @ Inches (mm)
			H1	H2	H3	D1	D2	D3	W1	W2	R1 dia.	R2 dia.		N1 (O.D.)
FR7	230V	25 – 40	24.8 (630)	24.2 (614)	23.3 (591)	10.1 (257)	2.7 (68)	7.5 (190)	9.3 (237)	7.5 (190)	.7 (18)	.4 (9)	77.2 (35)	3 @ 1.85 (47)
	480V	50 – 75												
	575V	40 – 50												

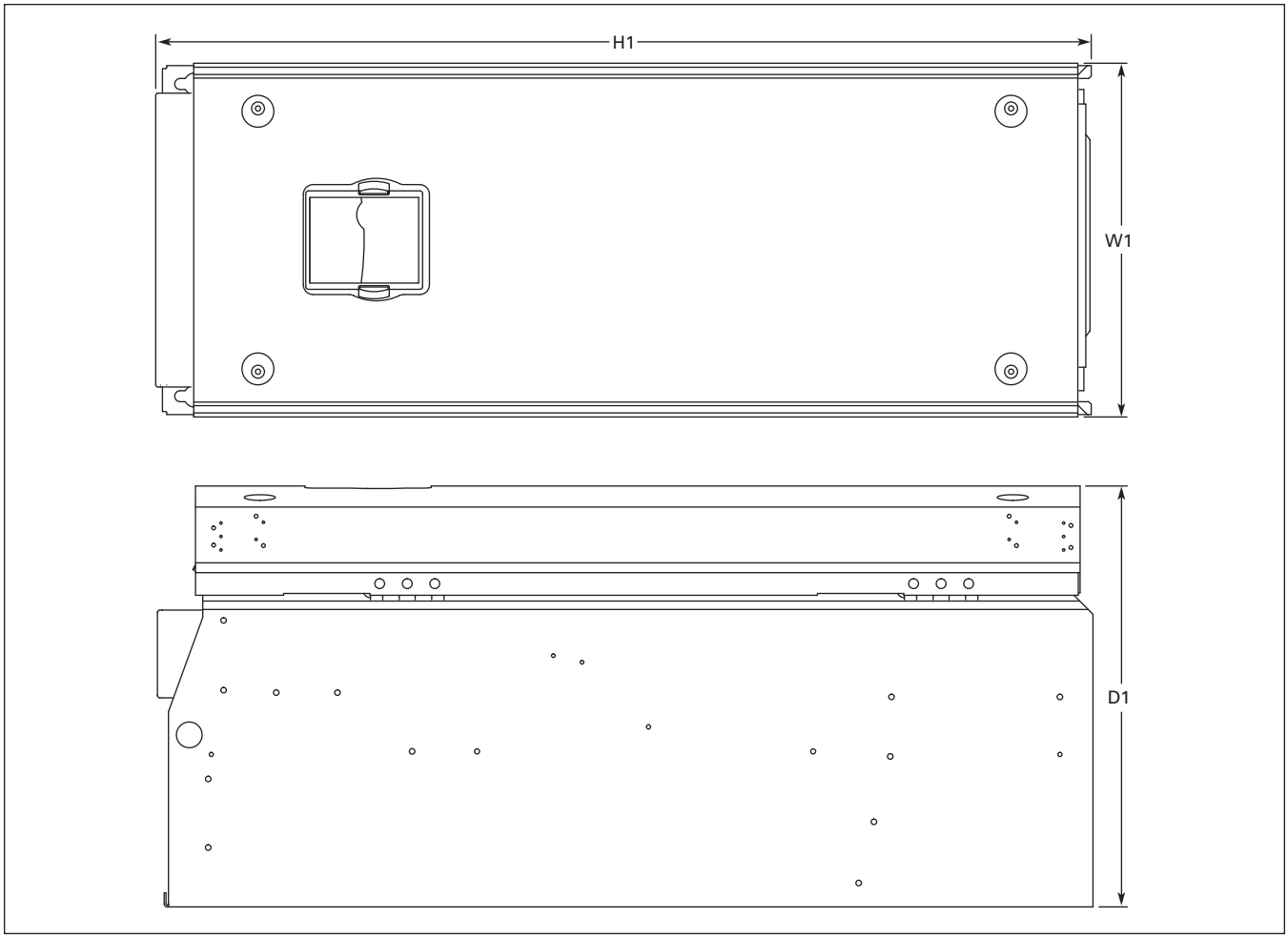

Figure A-10: VSD Series Open Drive Dimensions, TYPE 1 and TYPE 12, FR8

Table A-9: VSD Series Open Drive Dimensions, FR8

Frame Size	Voltage	hp (VT)	Approximate Dimensions in Inches (mm)			Knockout @ Inches (mm)
			D1	H1	W1	
FR8	230V	50 – 75	13.5 (344)	30.1 (764)	11.4 (289)	3 @ 1.1 (28)
	480V	100 – 150				
	575V	60 – 100				2 @ 2.32 (59)

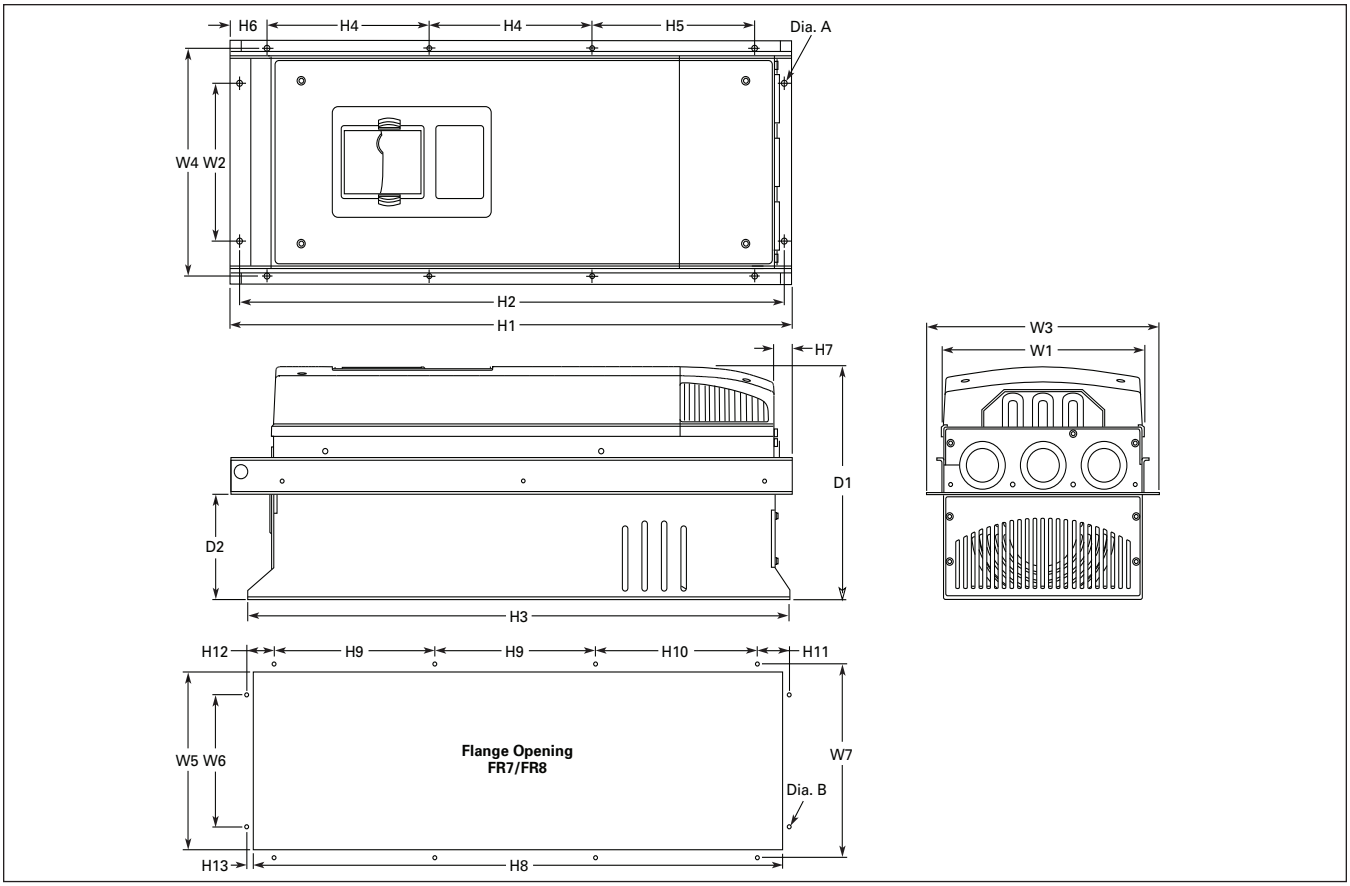

Figure A-11: VSD Series Open Drive Dimensions, TYPE 1 and TYPE 12, with Flange Kit, FR7 and FR8

Table A-10: Dimensions for VSD Series Open Drive, FR7 and FR8 with Flange Kit

Frame Size	Voltage	hp (VT)	Approximate Dimensions in Inches (mm)													
			W1	W2	W3	W4	H1	H2	H3	H4	H5	H6	H7	D1	D2	Dia. A
FR7	230V	25 – 40	9.3 (237)	6.8 (175)	10.6 (270)	10.0 (253)	25.6 (652)	24.8 (632)	24.8 (630)	7.4 (189)	7.4 (189)	.9 (23)	.8 (20)	10.1 (257)	4.6 (117)	.3 (6)
	480V	50 – 75														
	575V	40 – 50														
FR8	230V	50 – 75	11.2 (285)	—	14.0 (355)	13.0 (330)	32.8 (832)	—	29.3 (745)	10.2 (258)	10.4 (265)	1.7 (43)	2.2 (57)	13.5 (344)	4.3 (110)	.4 (9)
	480V	100 – 150														
	575V	60 – 100														

Table A-11: Dimensions for the Flange Opening, FR7/FR8

Frame Size	Voltage	hp (VT)	Approximate Dimensions in Inches (mm)									
			W5	W6	W7	H8	H9	H10	H11	H12	H13	Dia. B
FR7	230V	25 – 40	9.2 (233)	6.9 (175)	10.0 (253)	24.4 (619)	7.4 (189)	7.4 (189)	1.4 (35)	1.3 (32)	.3 (7)	.3 (6)
	480V	50 – 75										
	575V	40 – 50										
FR8	230V	50 – 75	11.9 (301)	—	13.0 (330)	31.9 (810)	10.2 (258)	10.4 (265)	—	—	—	.4 (9)
	480V	100 – 150										
	575V	60 – 100										

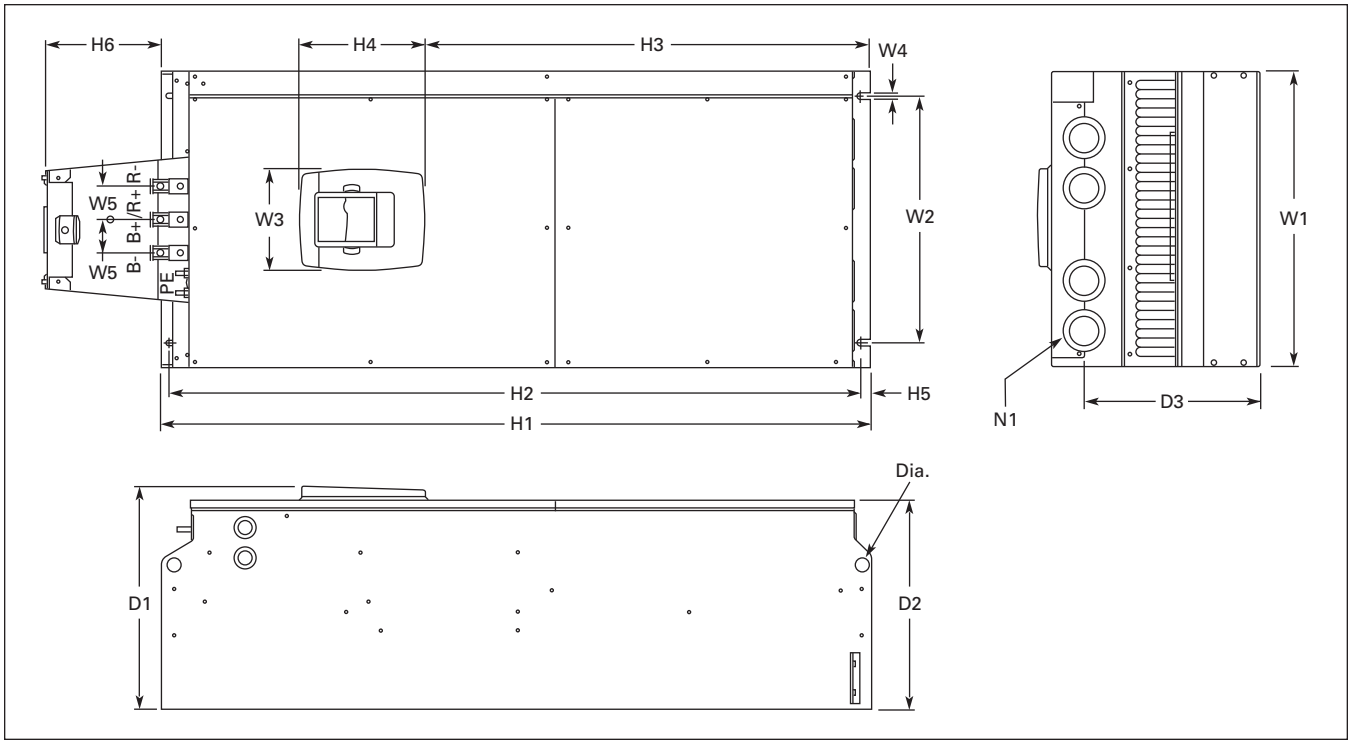

Figure A-12: VSD Series Open Drive Dimensions, OPEN 1 and OPEN 12 FR9

Table A-12: Dimensions for VSD Series Open Drive, FR9

Frame Size	Voltage	hp (VT)	Approximate Dimensions in Inches (mm)								
			W1	W2	W3	W4	W5	H1	H2	H3	H4
FR9	230V	100	18.9 (480)	15.7 (400)	6.5 (165)	.4 (9)	2.1 (54)	45.3 (1152)	44.2 (1122)	28.3 (721)	8.0 (205)
	480V	200 – 250									
	575V	125 – 200									

Table A-12: Dimensions for VSD Series Open Drive, FR9, continued

Frame Size	Voltage	hp (VT)	Approximate Dimensions in Inches (mm)						Knockouts @ Inches (mm)
			H5	H6 ①	D1	D2	D3	Dia.	N1 (O.D.)
FR9	230V	100	.6 (16)	7.4 (188)	14.3 (362)	12.9 (327)	11.2 (285)	.8 (21)	4 @ 2.32 (59)
	480V	200 – 250							
	575V	125 – 200							

① Brake resistor terminal box (H6) included when brake chopper ordered.

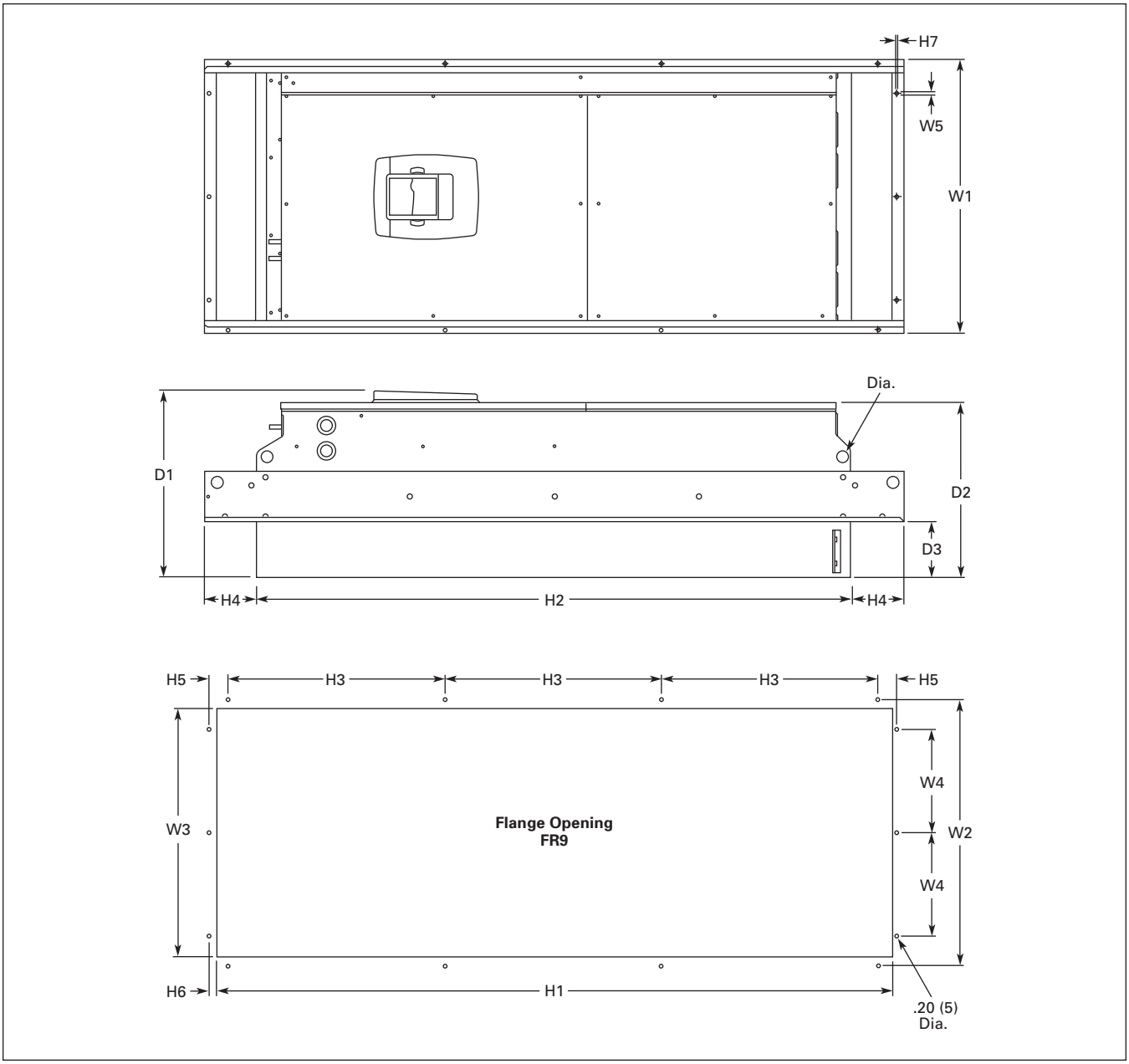

Figure A-13: VSD Series Open Drive Dimensions, TYPE 1 and TYPE 12 FR9 with Flange Kit

Table A-13: Dimensions for VSD Series Open Drive, FR9 with Flange Kit

Frame Size	Voltage	hp (VT)	Approximate Dimensions in Inches (mm)															
			W1	W2	W3	W4	W5	H1	H2	H3	H4	H5	H6	H7	D1	D2	D3	Dia.
FR9	230V	100	20.9 (530)	20.0 (510)	19.1 (485)	7.9 (200)	.2 (6)	51.7 (1312)	45.3 (1150)	16.5 (420)	3.9 (100)	1.4 (35)	.4 (9)	.1 (2)	24.9 (362)	13.4 (340)	4.3 (109)	.8 (21)
	480V	200 – 250																
	575V	125 – 200																

EMC Capability

General

For products used within the European Community (EC), the Electro Magnetic Compatibility (EMC) directive states that the electrical equipment must not disturb the environment and must be immune to other Electro Magnetic Disturbances in the environment.

The design intent was to develop a family of drives, which is user friendly and cost effective, while fulfilling the user's needs. EMC compliance was a major consideration from the outset of the design.

The VSD Series drives are is targeted at the world market. To ensure maximum flexibility, yet meet the EMC needs of different regions, all drives meet the highest immunity levels, while emission levels meet the requirements noted in the following section.

EMC Classification

the VSD Series drives are EMC classification H capable.

Class H:

VSD Series drives have been designed to fulfill the requirements of the product standard EN 61800-3_A11 for the 1st environment restricted distribution and the 2nd environment.

The emission levels correspond to the requirements of EN 61000-6-4.

VSD Series drives fulfill all applicable EMC immunity requirements (standards EN 61000-6-1, EN 61000-6-2 and EN 61800-3+A11).

Declaration of Conformity

The Manufacturer's Declarations of Conformity assuring the compliance of the VSD Series drives with the European Community (EC) EMC-directives is available upon request.

Warranty and Liability Information

Johnson Controls Inc. warrants the product delivered in the Johnson Controls shipping package to be free from defects in material and workmanship, under normal use and service, for twenty four (24) months from date of manufacturing. Products that fail during this period will be repaired or replaced at Johnson Controls discretion, with the same or a functionally equivalent product, provided the original purchaser (A) returns the failed product, and (B) provides proof of original date of purchase. This warranty does not apply, in the judgment of Johnson Controls, to damage caused during shipment, handling, storage, or accidental misuse. The original purchaser of the product must obtain a Johnson Controls Return Material Authorization (RMA) number prior to returning any defective product. (When purchased through an Authorized Distributor, the Distributor should supply an RMA number to their customer.)

The maximum liability of this warranty is limited to the purchase price of the product. In no event, regardless of cause, shall Johnson Controls Inc. or Eaton Electrical Inc. be liable (a) for penalties or penalty clauses of any description, or (b) for certification not otherwise specifically provided herein and/or indemnification of purchaser or others for costs, damages or expenses, each arising out of or related to the product or services of any order or (c) for any damages resulting from loss of profits, use of products or for any incidental indirect or consequential damages, even if advised of the possibility of such damages.

Appendix B — Fault and Warning Codes

Table B-1: Fault Codes

Fault Code	Fault	Possible Cause	Solution
1	Overcurrent	VSD Series drive has detected a high current (>4xI_n) in its output due to: • sudden heavy load increase • short in the motor • short in the cables to the motor • unsuitable motor	Check loading. Check motor. Check cables.
2	Overvoltage	The DC-link voltage has exceeded its high limit due to: • too short a deceleration time • high voltage levels or surges in the utility supply	Make the deceleration time longer. Use brake chopper and brake resistor (standard on some models, available as options on others). Correct utility supply voltage (level is too high). Add input impedance to limit surges.
3	Ground (Earth) Fault	Current sensing indicates that the sum of motor phase currents is not zero. • insulation failure in motor or motor cables	Check motor and motor cables.
5	Charging Switch	The charging switch was open, when the START command was given due to: • faulty operation • component failure	Reset the fault and restart. Should the fault re-occur, contact your Johnson Controls distributor.
6	Emergency stop	An Emergency stop signal was received from one of the digital inputs	Determine reason for the Emergency stop and remedy it.
7	Saturation trip	• defective component • motor or motor cable short	Cannot be reset from the keypad. Switch off power. IF THE PROBLEM IS NOT IN THE MOTOR OR ITS CABLES, DO NOT RE-CONNECT POWER! Contact your Johnson Controls distributor. If this fault appears simultaneously with Fault 1, check the motor and motor cables.
8	System fault	• component failure • faulty operation **Note:** exceptional fault data record, see Active Fault Menu for more information	Reset the fault and restart. Should the fault re-occur, contact your Johnson Controls distributor.

Table B-1: Fault Codes, continued

Fault Code	Fault	Possible Cause	Solution
9	Undervoltage	DC-link voltage is less than the minimum safe operating voltage limit • most probable cause: too low a utility supply voltage • VSD Series internal fault	If there was a supply voltage loss or dip, reset the fault and restart the VSD Series drive. Check the supply voltage. If it was within specification at the time of the fault, an internal failure has occurred. Contact your Johnson Controls distributor.
10	Input line supervision	Input line phase is low or missing.	Check the utility supply voltage, cables and connections.
11	Output phase supervision	Current sensing indicates that there is no current in one motor phase	Check the motor cables, connections and motor.
12	Brake chopper supervision	• no brake resistor installed • brake resistor is broken • brake chopper failure	Check the brake resistor. If the resistor is ok, the chopper is faulty. Contact your Johnson Controls distributor.
13	VSD Series undertemperature	Heatsink temperature is under -10°C	Provide supplemental heating or relocate the VSD Series drive to a warmer location.
14	VSD Series overtemperature	Heatsink temperature is over 90°C.	An overtemperature warning is issued when the heatsink temperature exceeds 85°C, a fault occurs at 90°C. Check for the correct amount and unrestricted flow of cooling air. Check the heatsink for dust or dirt buildup. Check the highest ambient temperature level. Make sure that the switching frequency is not set too high in relation to the ambient temperature and motor load.
15	Motor stalled	• motor or load mechanical failure • load too high • stall parameter settings incorrect	Check the motor, mechanical system and load level. Confirm the stall parameter settings.
16	Motor overtemperature	• motor is overloaded • motor overheating has been detected by VSD Series motor temperature model	Decrease the motor load. If no motor overload exists, check the temperature model parameters.
17	Motor underload	• mechanical or load problem • underload parameter settings incorrect	Check the motor, check for a loose belt, broken coupling or load problems. Confirm underload parameter settings.

Table B-1: Fault Codes, continued

Fault Code	Fault	Possible Cause	Solution
22 23	EEPROM checksum fault	Parameter save fault • faulty operation • component failure	Upon reset of this fault, the VSD Series drive will automatically reload the parameter default settings. Check all parameter settings after reset. If the fault reoccurs, contact your Johnson Controls distributor.
25	Microprocessor watchdog fault	• faulty operation • component failure	Reset the fault and restart. If the fault reoccurs, contact your Johnson Controls distributor.
26	Start-up prevented	Start-up of the drive has been prevented.	Check Start Enable/Interlock settings.
29	Thermistor fault	The thermistor input of an option board has detected a high motor temperature	Check the motor cooling and the motor loading. Check the thermistor connection. (If the thermistor input of an option board is not being used, it must be short-circuited.)
31	IGBT temperature hardware	IGBT Inverter Bridge overtemperature protection has detected high short term overload current	Check loading. Check motor size.
32	Fan cooling	The VSD Series cooling fan did not start when commanded	Contact your Johnson Controls distributor.
34	CAN bus communication	Sent message not acknowledged	Ensure that there is another device on the bus with the appropriate configuration.
36	Control unit	Control unit cannot control the power unit and vise-versa	Change control unit.
37	Device change	• option board changed • different power rating of drive	Reset. **Note:** No fault time data record!
38	Device added	• option board added • drive of different power rating added	Reset. **Note:** No fault time data record!
39	Device removed	• option board removed • drive removed	Reset. **Note:** No fault time data record!
40	Device unknown	Unknown option board or drive	Contact your Johnson Controls distributor.
41	IGBT temperature software	IGBT Inverter Bridge overtemperature protection has detected high short term overload current	Check loading. Check motor size.
42	Brake resistor overtemperature	Brake resistor overtemperature protection has detected excessive braking	Set the deceleration time longer. Use an external brake resistor.

Table B-1: Fault Codes, continued

Fault Code	Fault	Possible Cause	Solution
43	Encoder fault	**Note:** the exceptional Fault data record. See Active Fault Menu for more information. Additional codes: 1 Encoder 1 channel A is missing 2 Encoder 1 channel B is missing 3 Both encoder 1 channels are missing 4 Encoder reversed	Check encoder channel connections. Check the encoder board.
50	Analog input I_{in} < 4 mA (for signal range 4 to 20 mA)	Current at the analog input is < 4 mA • control cable is broken or loose • signal source has failed	Check the current loop, signal source and wiring.
51	External fault	Digital input set as an external fault input has been triggered.	Check source of trigger.
52	Keypad communication fault	The connection between the control keypad and the VSD Series drive has been lost.	Check keypad connection and keypad cable.
53	Communication bus fault	The data connection between the communication bus master and the communication bus board has failed	Check installation. If installation is correct, contact your Johnson Controls distributor.
54	Slot fault	Defective option board or slot	Check that the board is properly installed and seated in slot. If installation is correct, contact your Johnson Controls distributor.
82	BypassOverLoad	The motor has been overloaded while connected to the bypass	Decrease the motor load. Disable the Current Imbalance feature – see the ***IT.*** manual.

Appendix C — Accessories

RS-232 Cables Used with VS Drives

Communication with PC

When communicating using 9000X software tools 9000XDrive or 9000XLoad, a cable with three wires and 9-pin D-connectors is used. See **Figure C-1**.

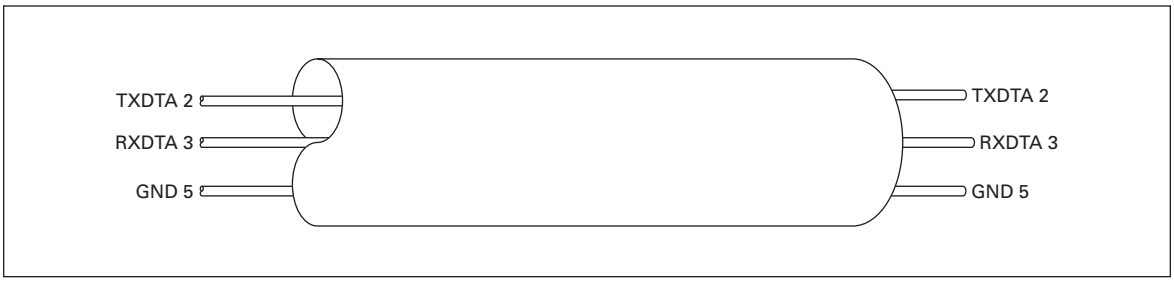

Figure C-1: RS-232 Cable for Parameter Setting or Software Downloading by Using PC

Remote Assembly of the Control Panel

When units are installed inside the cabinet, the keypad is often preferred mounted on the door of the cabinet to make programming and monitoring possible without opening the door. The keypad remote installation can be done with a similar pin-to-pin connected RS-232 cable as the PC-connection, with two additional wires (+12V, -12V) connected to the pins #6 and #9, feeding power to the keypad.

Note: When using these cables for PC-connection you have to check first whether the +12V / -12V lines can cause problems/damages in RS-232 output of PC/laptop. In some PC outputs, ±12V can generate extra current loops which might cause overheating of the components.

Figure C-2: Connection of Cable Used with Keypad

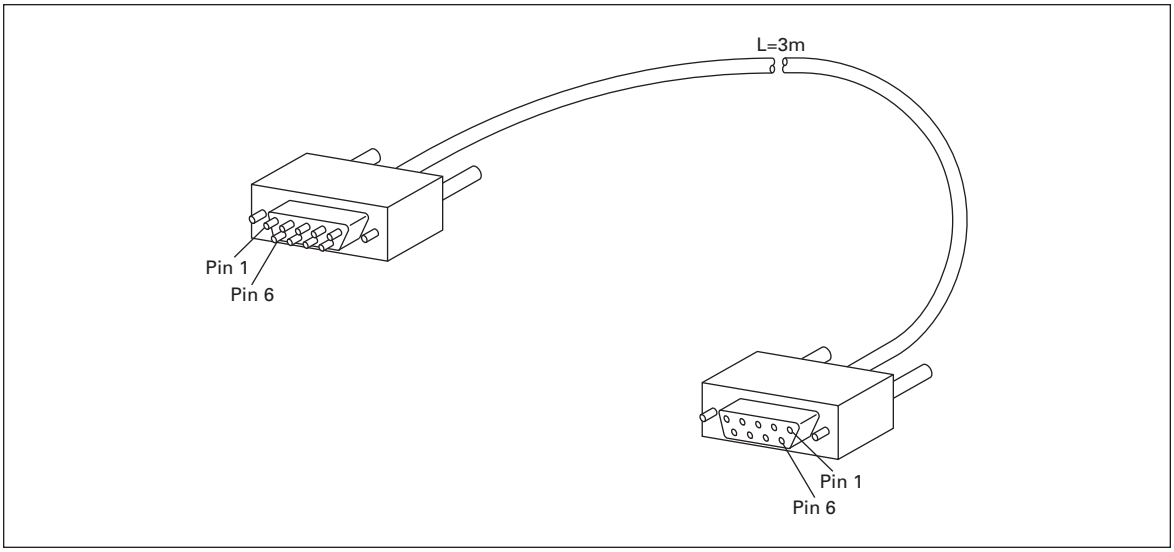

Figure C-3: RS-232 Cable

November 2009

Appendix D — Wiring Diagrams

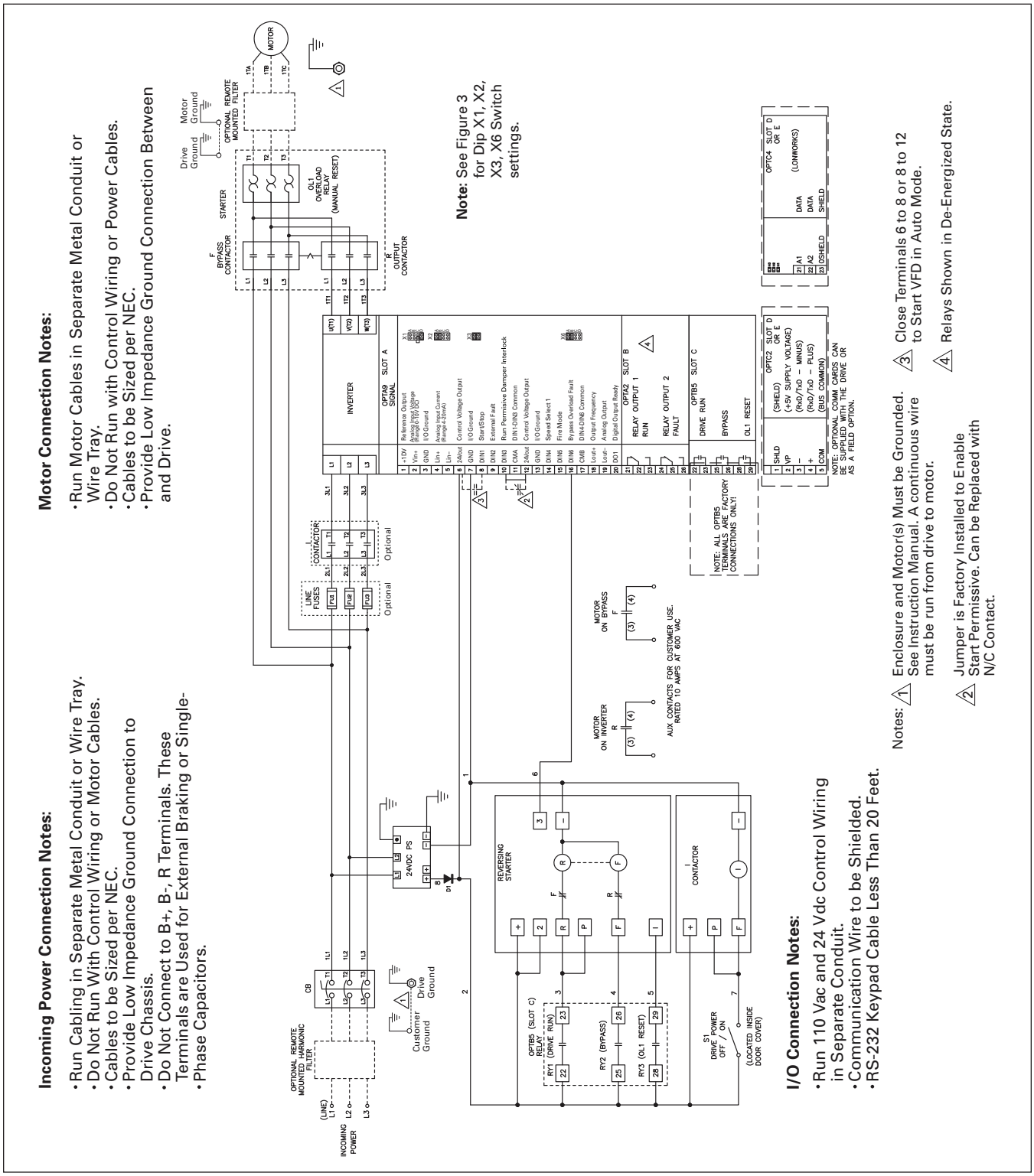

Figure D-1: VSD Series IntelliPass with Three Contactors

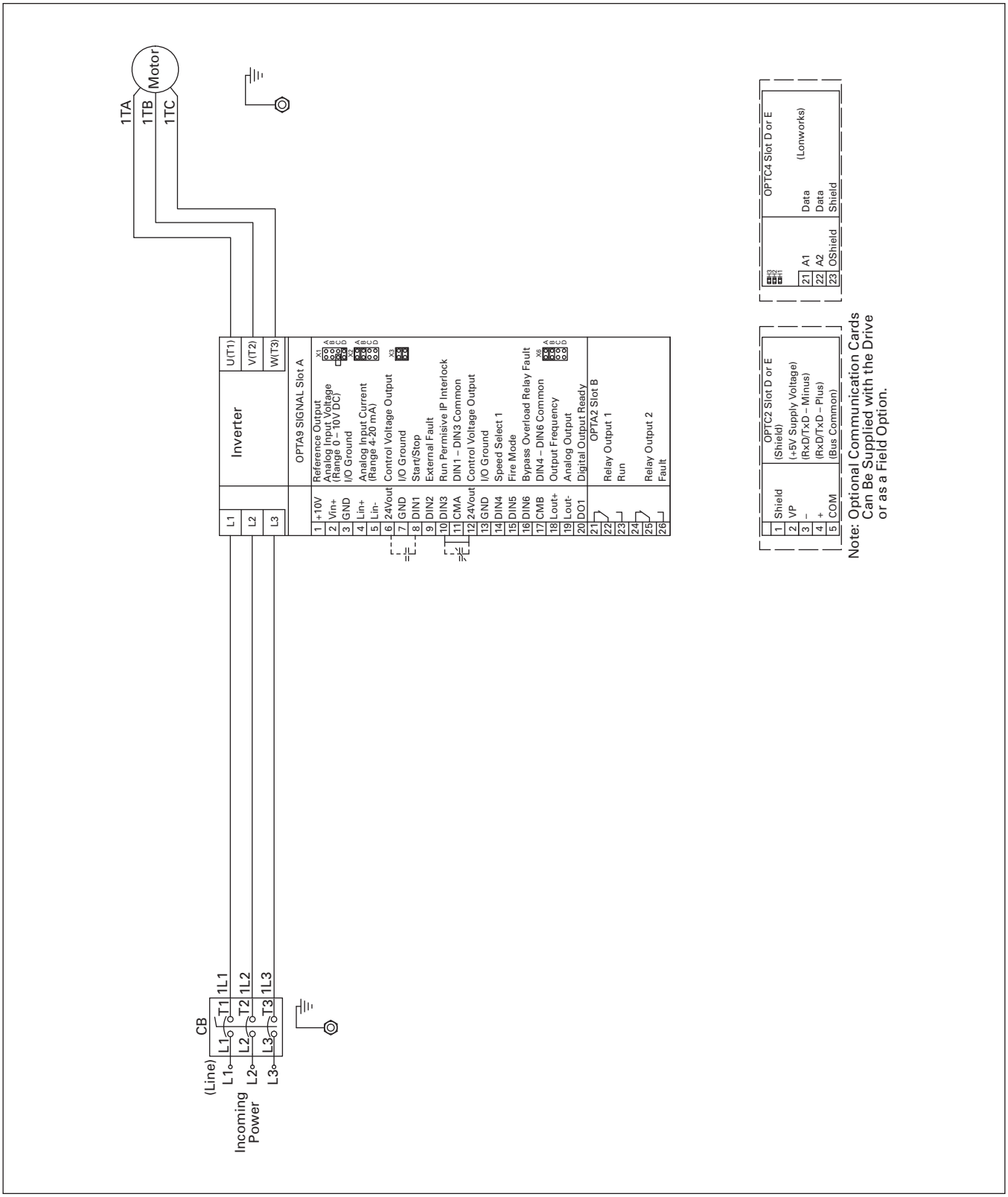

Figure D-2: VSD Series IntelliPass Disconnect

Controls Group
507 E. Michigan Street
P.O. Box 423
Milwaukee, WI 53201

Powered by **Eaton Technology**

© 2009 Johnson Controls
All Rights Reserved
Printed in USA
Publication No. LIT-1201828 / Z8520
www.johnsoncontrols.com
November 2009

APPENDIX D

Current VSD Settings

Start-Up Wizard — Duct Static, Building Static, Pressure Control, Temperature Control, Generic PI

Upon initial power up, the **Start-Up Wizard** guides the commissioner through the basic VSD Series setup. The **Start-Up Wizard** may be set to function upon power up by setting parameter P5.5.3, or by pressing the STOP/RESET button for 5 seconds while in the "Operate Menu". The display will read "Start-Up Wizard Activate!" after 5 seconds.

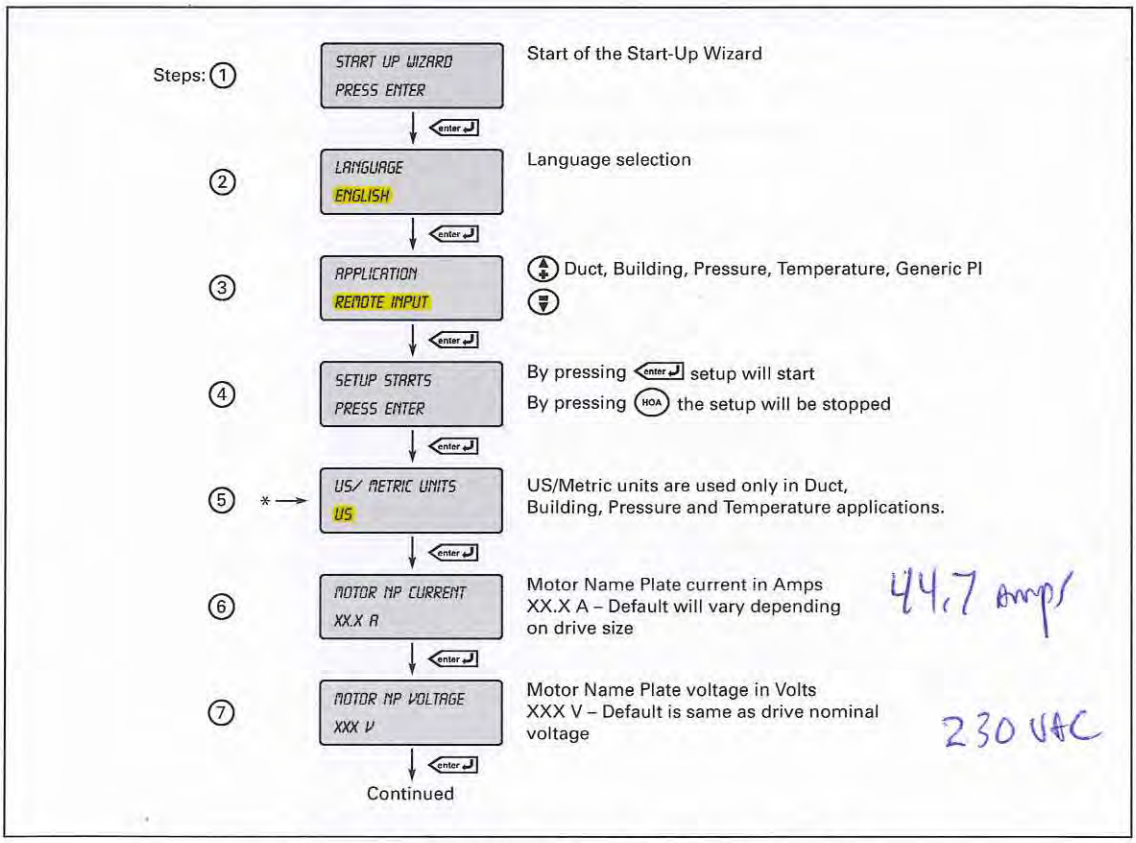

Figure 7-1: Start-Up Wizard Navigation (1 of 3)

Note: Use ↑↓ for changing parameter. Then press ENTER to save and move forward.

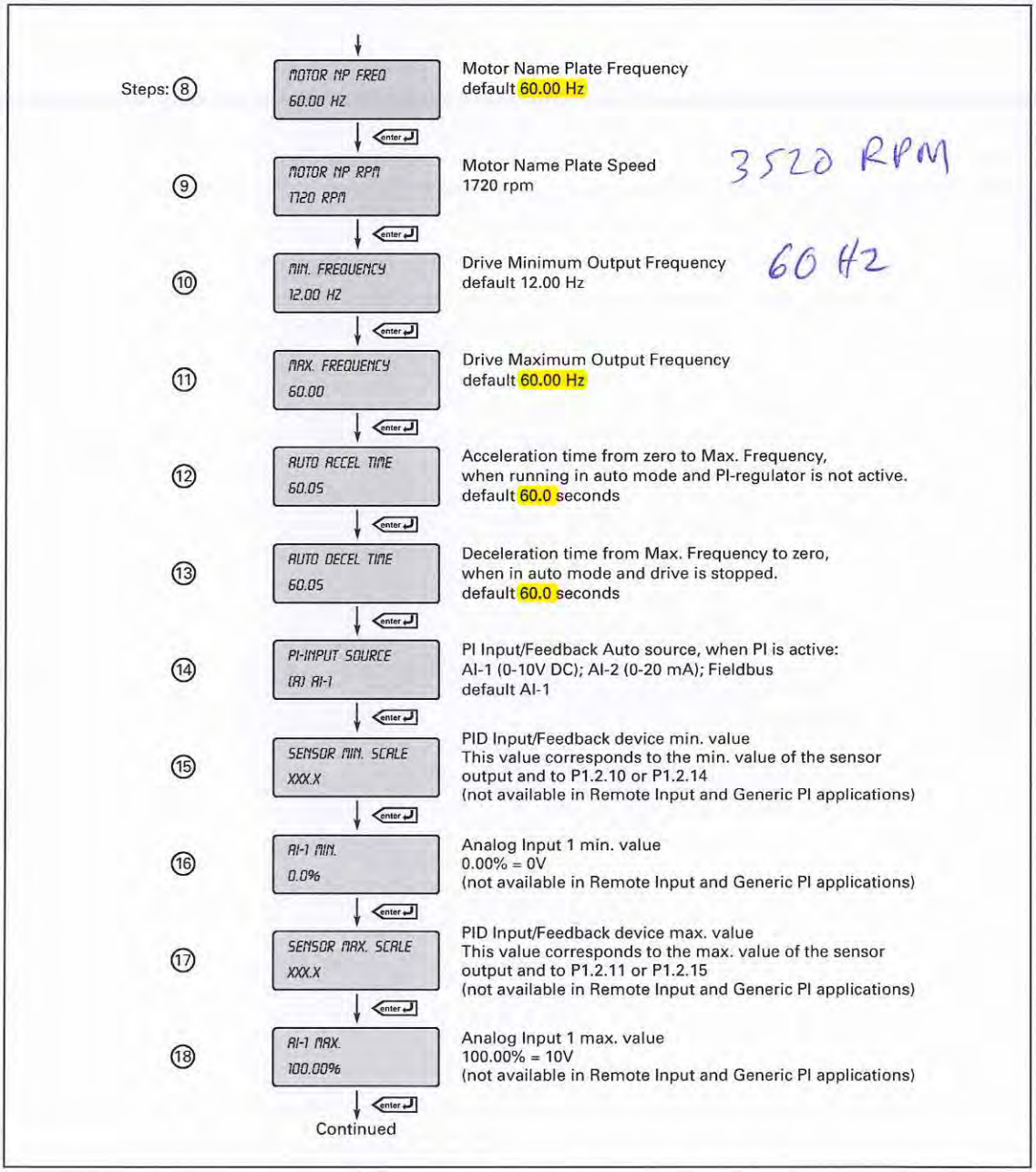

Figure 7-2: Start-Up Wizard Navigation (2 of 3)

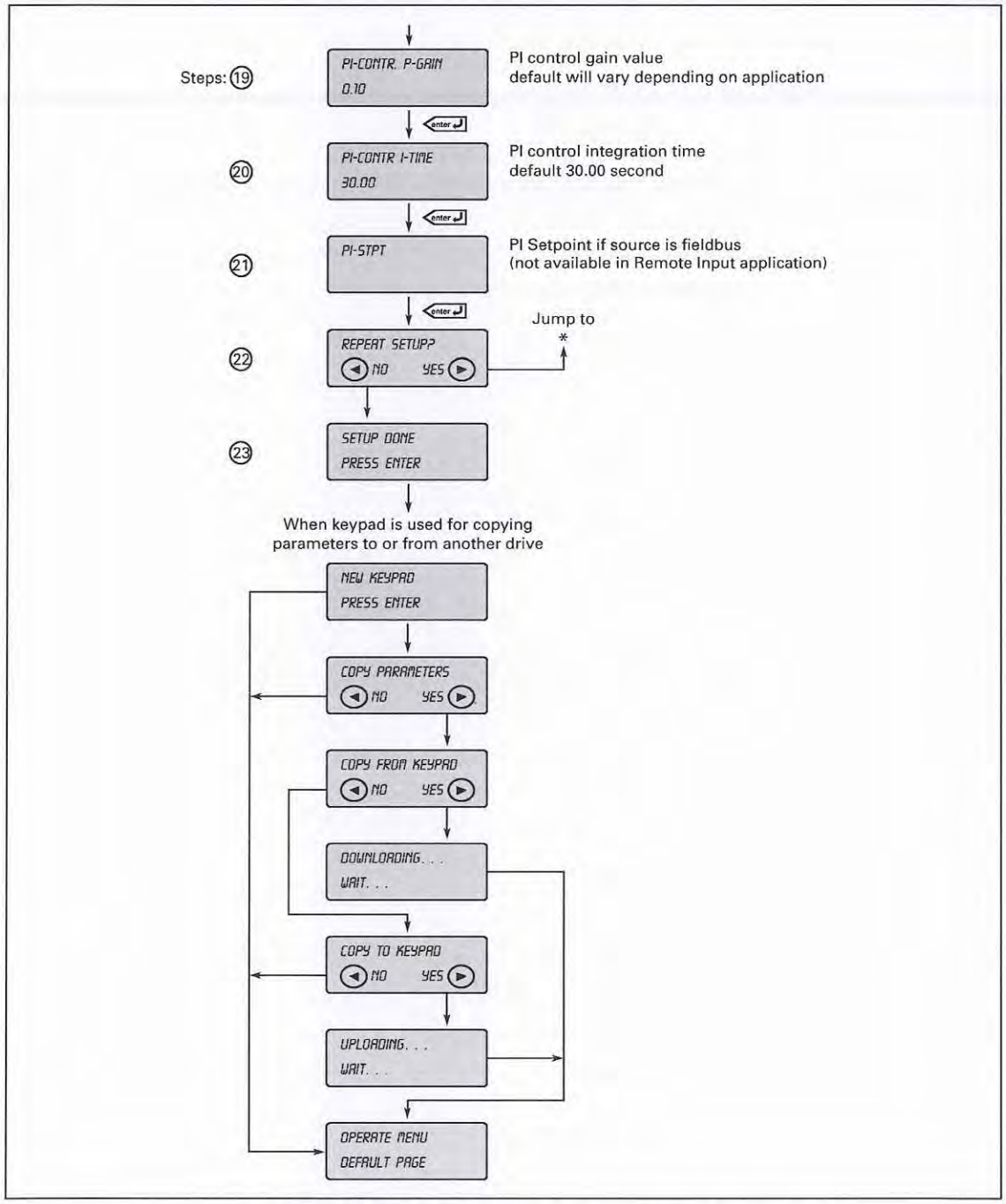

Figure 7-3: Start-Up Wizard Navigation (3 of 3)

Note: Start-Up Wizard can be cancelled with the STOP/RESET button. If pressed, the text "EXIT?" is shown on the display along with "No" and "Yes".

Note: In Pressure Control application, inverse selection is an option.

Remote Input is timer

Start-Up Wizard — Remote Input Application

The Remote Input application uses a slightly different Start-Up Wizard:

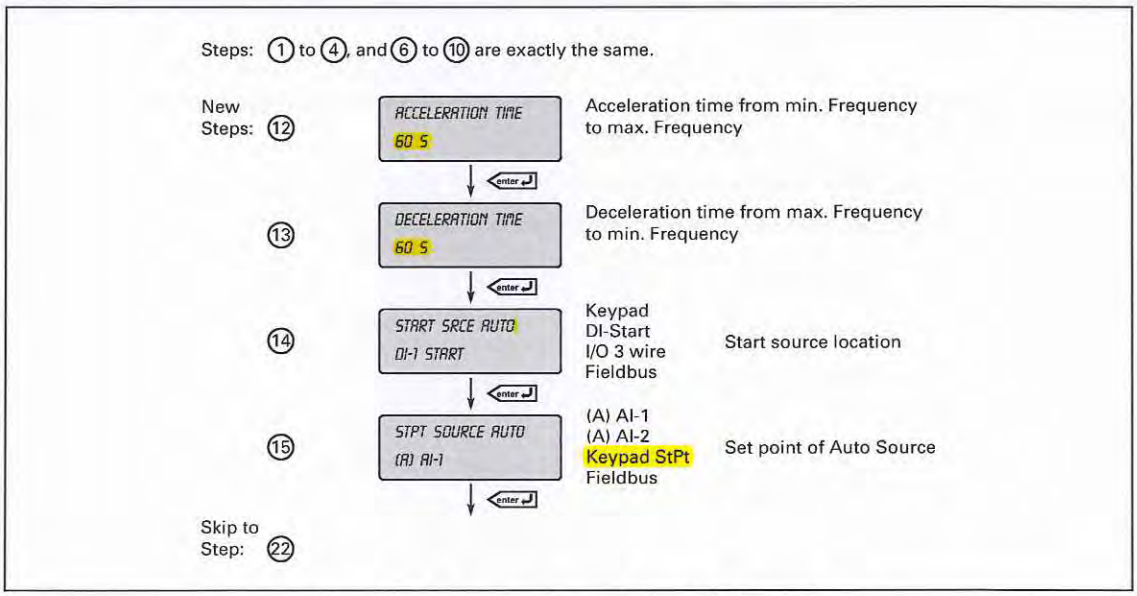

Figure 7-4: Remote Input Start-Up Wizard

APPENDIX E

Instruction Manual – Intermatic/Grasslin 50 Memories Time Switch

GRÄSSLIN
YOUR SENSES. OUR SOLUTIONS

INTERMATIC

Instruction Manual

50 memories time switch

page

Safety Precautions 2

OK reset

Symbols, keys 3

1. Prog

Initial Start - Up 4

Prog.

Program Structure 5

Setting 24h or am/pm clock, time and weekday 7

Change for Daylight Savings time 8

Mode

Operating Mode 9

Warranty 10

Safety precautions

- The connection and installation of electrical devices may only be carried out by a qualified electrician.
- Interventions in and changes to the device result in the voiding of the warranty claim.
- Observe your national regulations and the respective safety provisions.
- Switch-off commands have priority over switch-on commands.

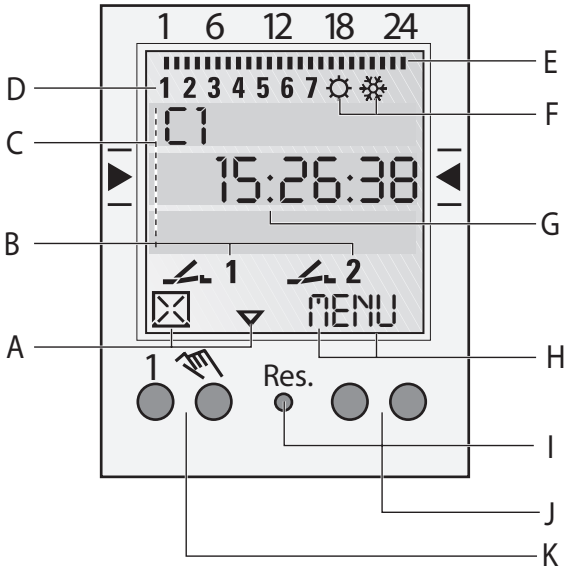

Display

A Function displays of the two left-hand buttons

B Channel status displays
- 1 = Channel 1 ON
- 1 = Channel 1 OFF
- Channel 1 = C1, Channel 2 = C2

C 3 communication lines for time display, menu items, entry prompts etc.

D Day-of-week display

E Overview of daily switching program

F Display of summer/winter time

G Operating voltage (permanently lit dots)
Reserve power operation (dots flash)

H Function displays of the two right-hand buttons

General information

- The middle communication line shows the selectable menu item. If confirmed with OK, this item is activated.
- Flashing texts or symbols require an entry.
- If no entries are made within the next 2 minutes, the clock reverts to Auto mode.

Buttons

I Reset
The programs are retained in the case of a reset. The date and time must be set again. Press reset button with a blunt object (pen).

J Right-hand buttons

K Left-hand buttons with manual switch function in Automatic mode

Function displays of the two left-hand buttons:

△	scroll up in menu
▽	scroll down in menu
☒	Select/reject suggestion
✓	Select/accept suggestion
+	Press briefly = +1 Press and hold (approx. 2 sec) = +5
-	Press briefly = -1 Press and hold (approx. 2 sec) = -5

Function displays of the two right-hand buttons:

MENU	Exits the Automatic mode and enters the Programming mode
ESC	Press briefly = one step back Press and hold (approx. 2 sec) = return to Automatic mode
OK	Make selection and apply
EDT	Change request in Read mode
NO	Do not execute command
YES	Execute command
DEL	Delete

1.

Initial start-up - selection of menu language

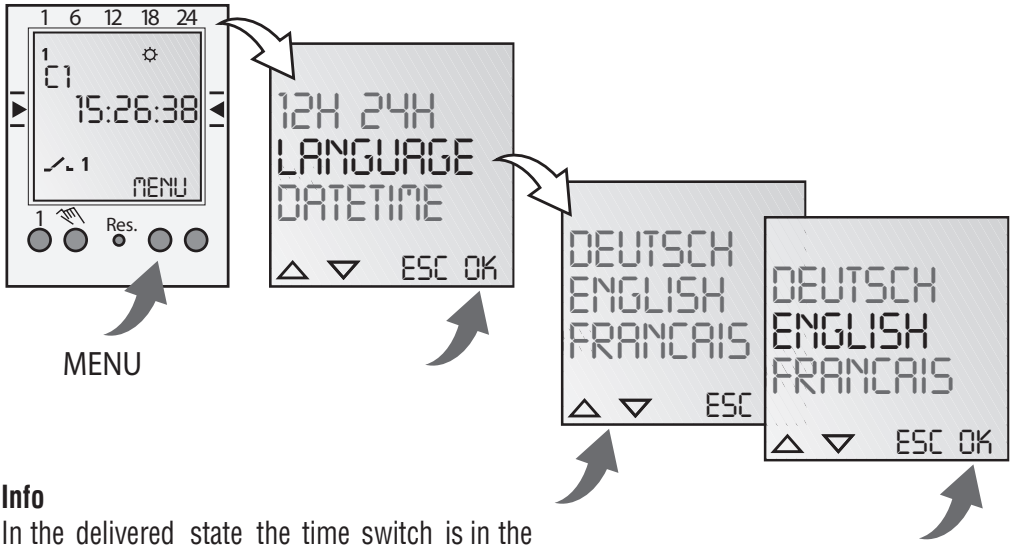

Info
In the delivered state the time switch is in the Auto mode with a preset time, date and the menu language English.

Prog.

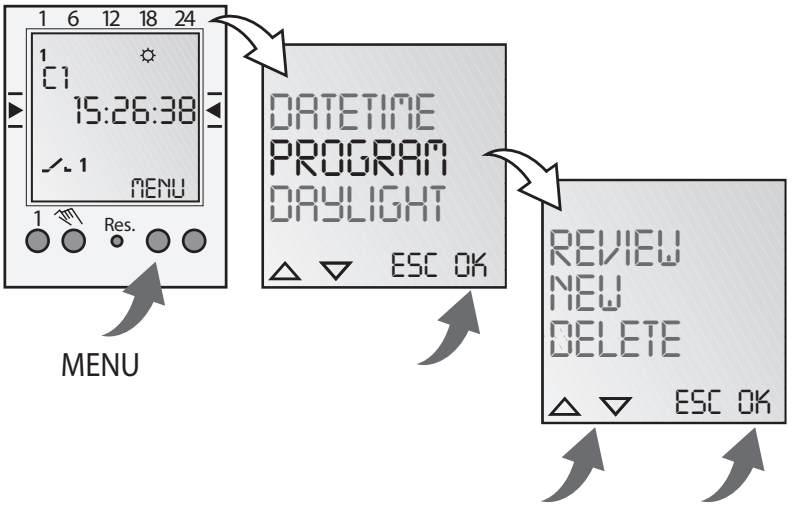

New program

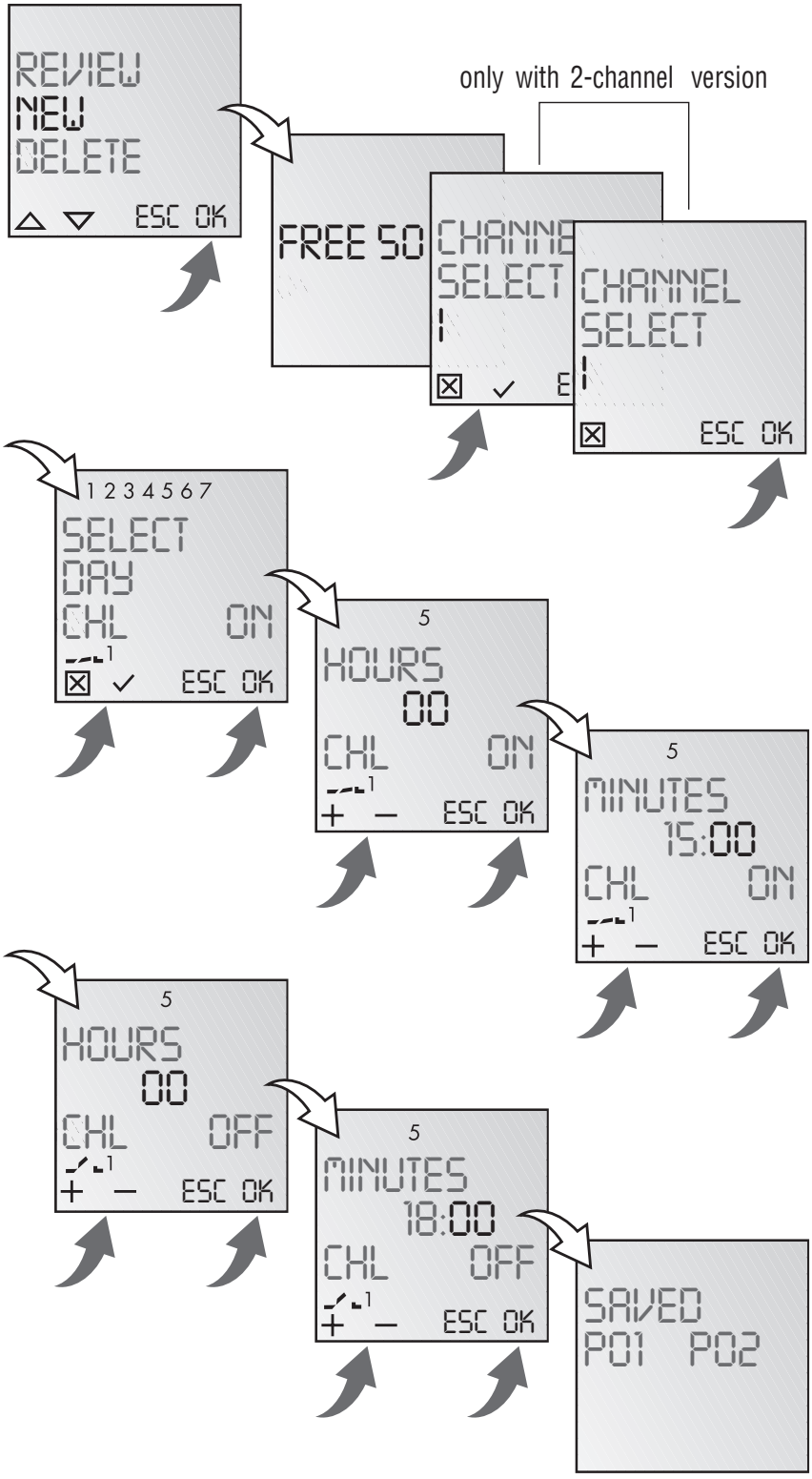

Info
The time switch has 50 memory spaces.

Example
ON command for channel 1 at 3 pm. OFF command at 6 pm.

- Select NEW program and confirm with **OK**.
- The free memory spaces are briefly displayed.
- Select channel and confirm with **OK**.
- Select day block or individual day (block formation as desired) and confirm with **OK**.
- Enter hour for ON command (+/-) and confirm with **OK**.
- Enter minute for ON command (+/-) and confirm with **OK**.
- Enter hour for OFF command (+/-) and confirm with **OK**.
- Enter minute for OFF command (+/-) and confirm with **OK**.
- Program is saved.
- Program jumps to selection REVIEW, **NEW**, DELETE. Now additional programs can be created.

View, edit program

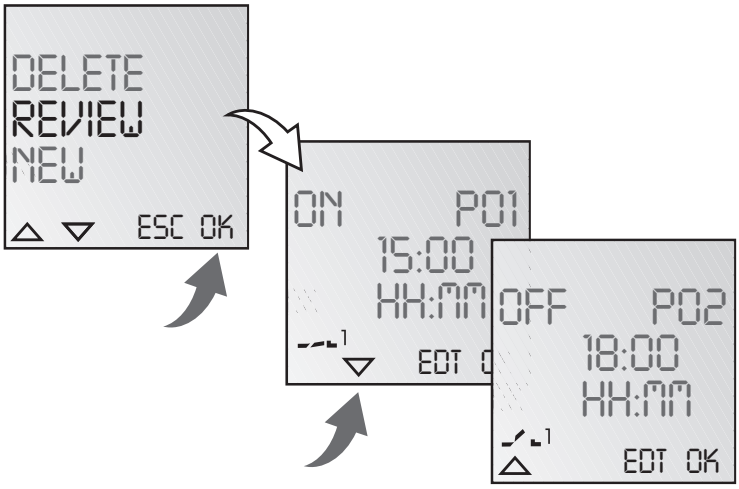

Info

- The program steps can be scrolled through with ▼ ▲.
- The respective program can be edited by pressing EDT.
  The procedure is the same as when creating a new program.

Delete all programs

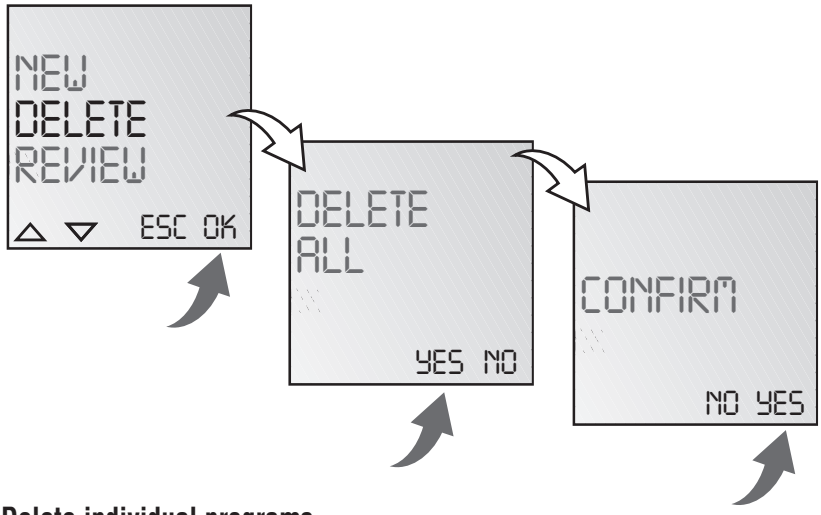

Info

- It is possible to delete all programs with YES
- By pressing NO, individual programs can be deleted.

Delete individual programs

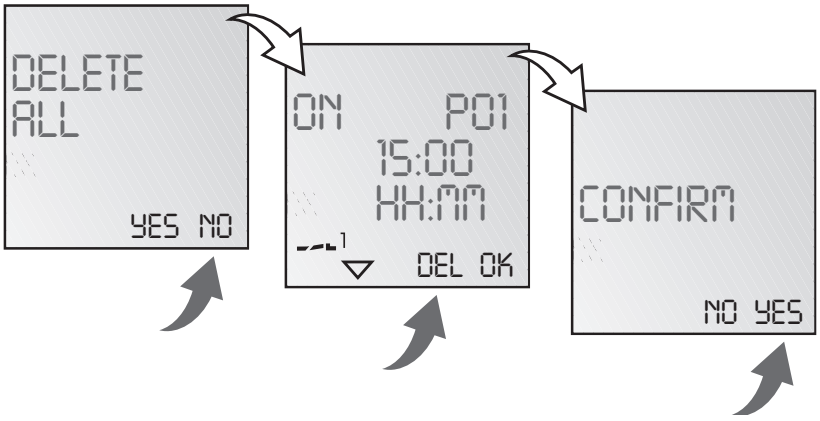

Info

When deleting individual programs, the corresponding program steps are deleted (e.g. P01 ON and P02 OFF).

Set date and time

Info
The date and time are preset at the factory.

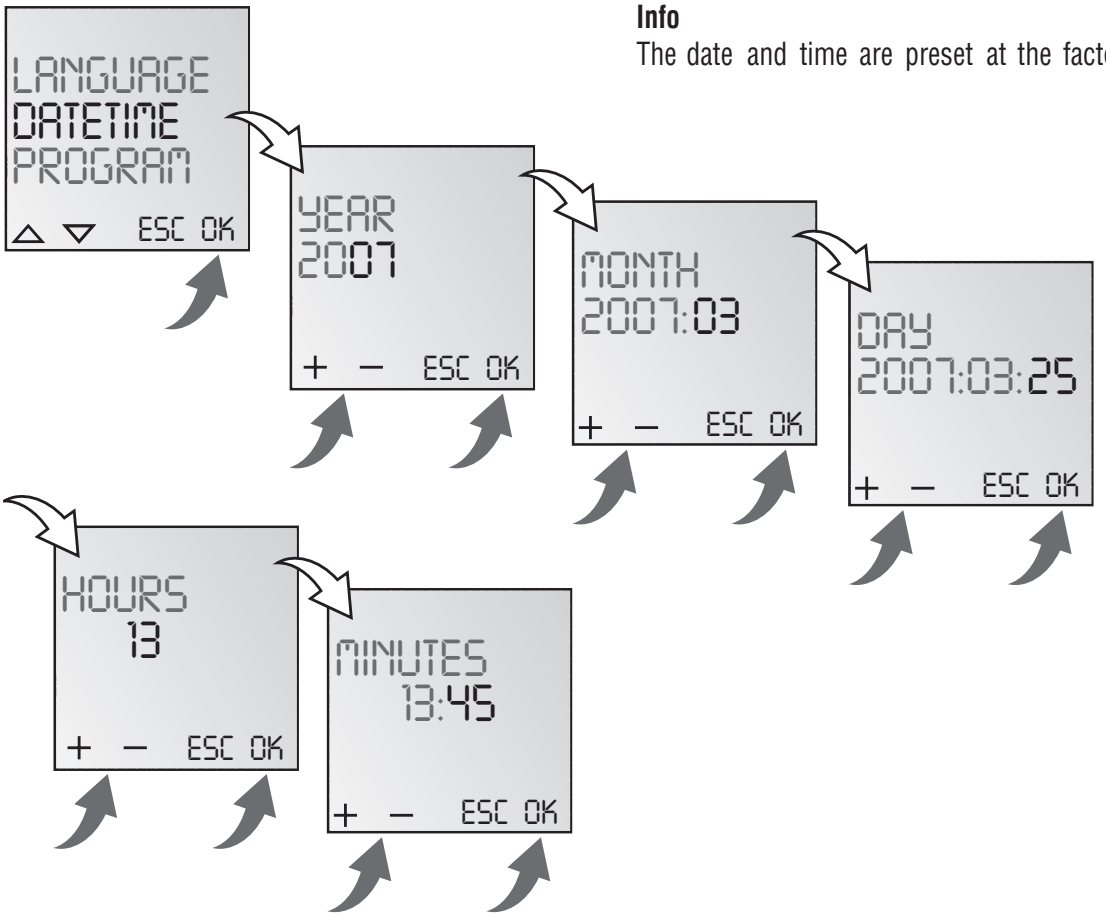

Set AM/PM (12-hour-) or 24-hour display

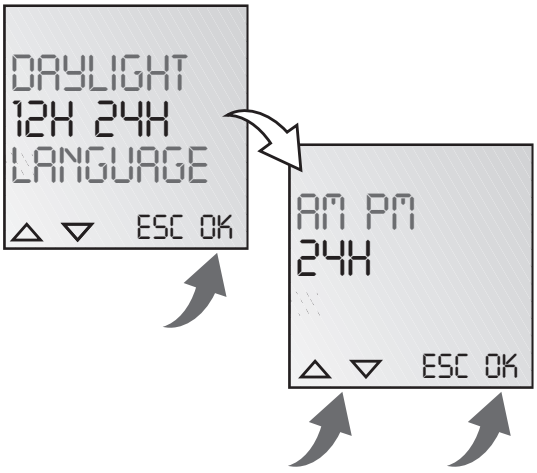

Change for Daylight Savings time

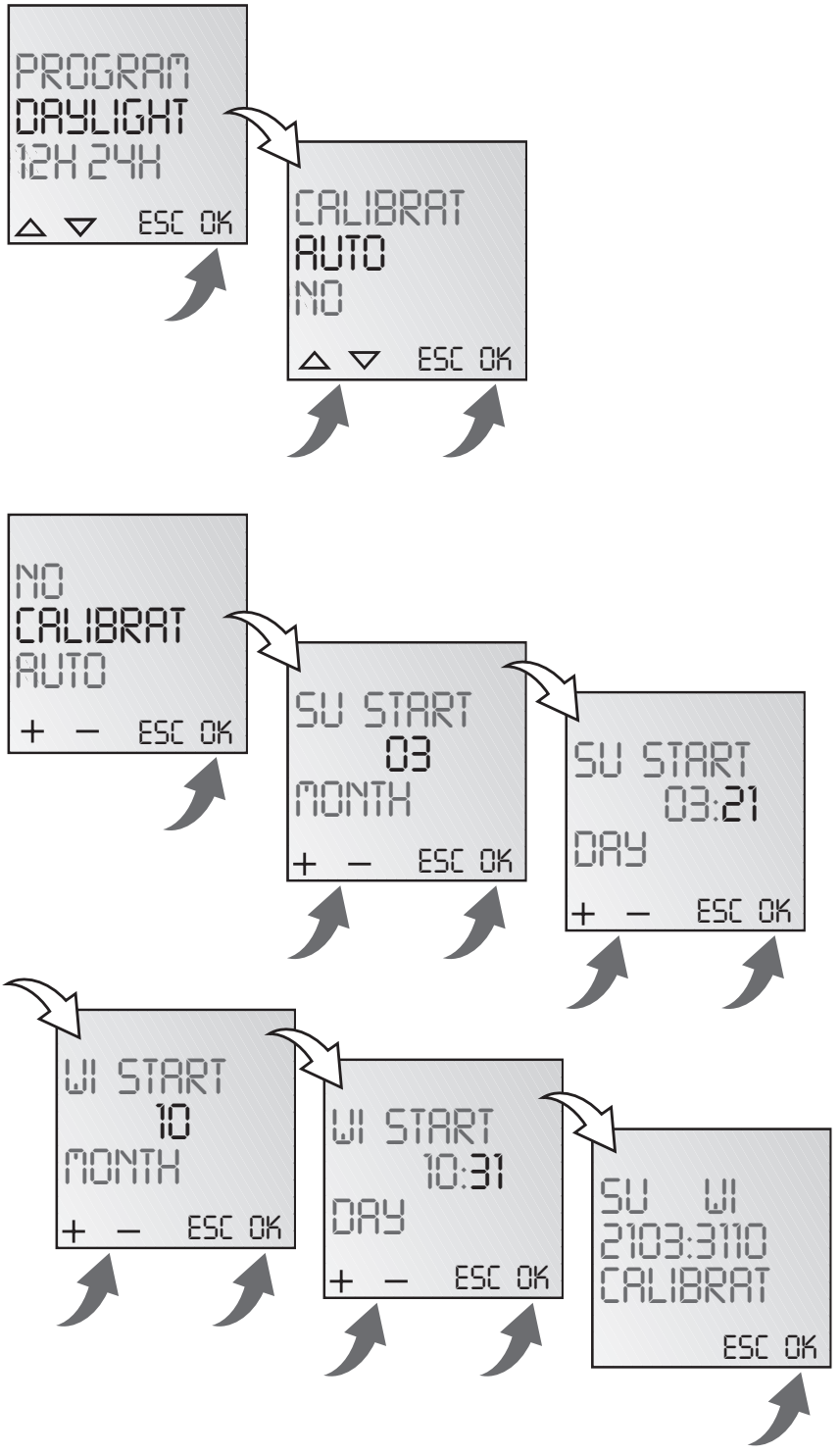

Info
The following settings are possible:

AUTO
Factory presetting of the published calendar dates. This is automatically recalculated for each year.

NO
No switchover

CALIBRAT
Programming for the start and ending date / or daylight savings time must be entered for this purpose.

The factory presetting is overwritten.

The programmed daylight savings time is automatically recalculated for each year.

The changeover takes place on the same specified day of the week in the same week of each month.

Example
03/21 Start Daylight Savings time
10/31 End Daylight Savings time

Operating mode

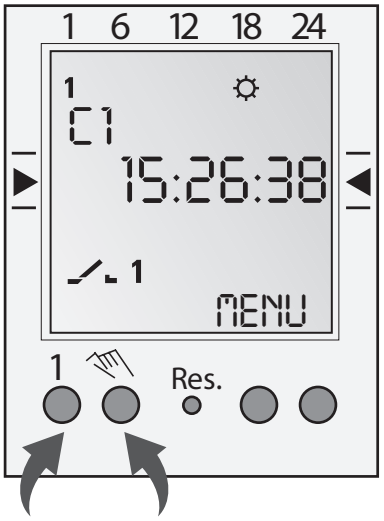

Info

Left-hand button = Channel 1
Right-hand button = Channel 2 (only with 2-channel version)

Press 1 x = FIX ON = continuous ON
Press 2 x = FIX OFF = continuous OFF
Press 3 x = return to Auto mode

FIX ON : FIX 1

FIX OFF : FIX 1

AUTO (no display) programmed switching times

WARRANTY

If within one (1) year from the date of purchase, this product fails due to a defect in material or workmanship, Intermatic Incorporated will repair or replace it, at its sole option, free of charge. This warranty is extended to the original household purchaser only and is not transferable. This warranty does not apply to: (a) damage to units caused by accident, dropping or abuse in handling, acts of God or any negligent use; (b) units which have been subject to unauthorized repair, opened, taken apart or otherwise modified; (c) units not used in accordance with instructions; (d) damages exceeding the cost of the product; (e) sealed lamps and/or lamp bulbs, LED's and batteries; (f) the finish on any portion of the product, such as surface and/or weathering, as this is considered normal wear and tear; (g) transit damage, initial installation costs, removal costs, or reinstallation costs.

INTERMATIC INCORPORATED WILL NOT BE LIABLE FOR INCIDENTAL OR CONSEQUENTIAL DAMAGES. SOME STATES DO NOT ALLOW THE EXCLUSION OR LIMITATION OF INCIDENTAL OR CONSEQUENTIAL DAMAGES, SO THE ABOVE LIMITATION OR EXCLUSION MAY NOT APPLY TO YOU. THIS WARRANTY IS IN LIEU OF ALL OTHER EXPRESS OR IMPLIED WARRANTIES. ALL IMPLIED WARRANTIES, INCLUDING THE WARRANTY OF MERCHANTABILITY AND THE WARRANTY OF FITNESS FOR A PARTICULAR PURPOSE, ARE HEREBY MODIFIED TO EXIST ONLY AS CONTAINED IN THIS LIMITED WARRANTY, AND SHALL BE OF THE SAME DURATION AS THE WARRANTY PERIOD STATED ABOVE. SOME STATES DO NOT ALLOW LIMITATIONS ON THE DURATION OF AN IMPLIED WARRANTY, SO THE ABOVE LIMITATION MAY NOT APPLY TO YOU.

This warranty service is available by either (a) returning the product to the dealer from whom the unit was purchased, or (b) mailing the product, along with proof of purchase, postage prepaid to the authorized service center listed below. This warranty is made by: Intermatic Incorporated/After Sales Service/7777 Winn Rd., Spring Grove, Illinois 60081-9698/815-675-7000 http://www.intermatic.com Please be sure to wrap the product securely to avoid shipping damage.

INTERMATIC INCORPORATED
SPRING GROVE, IL 60081-9698

158--00676

Project:

Location:

Product Type:

Contact/Phone:

Model #:

FM1D50A & FM1D50E Series

One Channel Surface/DIN Rail and Flush Mount

The FM1D50 Series One Channel Electronic Time Switches are compact 24-Hour/7-Day modules with heavy-duty relay contacts for switching low or line voltage loads. The time switches are applicable for time-of-day control of pumps, fans, heaters, HVAC control circuits, lighting, machinery and many other types of commercial, industrial, and agricultural equipment.

FM1D50A-120

FM1D50E-120

Features

- 24-Hour or 7-Day applications
- Auto Daylight Saving Time Feature
- Easy-to-follow menu driven programming
- Surface/DIN Rail or Flush Mount available
- Battery backup
- Manual override with load status indication
- 50 setpoint programs
- 2 preset adjustable block programs
- Clear dust-cover
- 7 Available Languages:
  English, German, French, Italian, Spanish, Portuguese, Dutch

Ratings

Size:	FM1D50A: 2.83" W x 4" H (72 mm x 102.5 mm) FM1D50E: 2.83" x 2.83" (72 mm x 72 mm)
Power Consumption:	4VA
Supply Voltage:	12, 24, 120, 240 VAC
Switch Rating:	SPDT relay
N.O. Contact:	16A Resistive, 277 VAC 1/2 HP, 120 VAC 1 HP, 240 VAC 12A, Ballast 120 VAC 8A, Ballast 240 VAC 720 VA, 240 VAC Pilot Duty 360 VA, 120VAC Pilot Duty 600W, Tungsten 120 VAC
N.C. Contact:	16A, 277 VAC Resistive, 8A, 24 VDC 360 VA, 120 VAC Pilot Duty
Wiring Connections:	FM1D50A Models: Screw terminals for #10 to #24 AWG Wire FM1D50E Models: ¼" quick connect terminals
Operating Temperature:	-13°F to 131°F (-25°C to 55°C) (limited display function at -13°F)
Shipping Weight:	FM1D50A: .53 lbs. FM1D50E: .26 lbs.
Warranty:	Limited 1 year

TITLE 20 CA LISTED

c UL us

#E10694

FM1D50A & FM1D50E Series

INTERMATIC

Model Number	Voltage	Programs	Mounting
FM1D50A-12*	12 VAC/VDC, 50/60 Hz	50	Surface/DIN Rail
FM1D50A-24*	24 VAC/VDC, 50/60 Hz	50	Surface/DIN Rail
FM1D50A-120	120 VAC, 50/60 Hz	50	Surface/DIN Rail
FM1D50A-240	240 VAC, 50/60 Hz	50	Surface/DIN Rail
FM1D50E-12*	12 VAC/VDC, 50/60 Hz	50	Flush
FM1D50E-24*	24 VAC/VDC, 50/60 Hz	50	Flush
FM1D50E-120	120 VAC, 50/60 Hz	50	Flush
FM1D50E-240	240 VAC, 50/60 Hz	50	Flush

*Model will operate on AC or DC

Specification

Furnish and install a Grässlin FM1D50_____ 24-Hour/7-Day electronic time switch. This 1-circuit control shall have 24-Hour/7-Day programming and also offer 25 ON and 25 OFF setpoint programs and include 2 preset block programs to allow a selection of any combination of days for different weekday schedules. The LCD shall display time-of-day in AM/PM or 24-Hour (military time) format and provide load status indication. Auto Daylight Saving Time adjustment provided. The time switch will be programmable to-the-minute and also offer a manual override for ON or OFF to the next scheduled event. The SPDT relay output will be rated for 16A Resistive @ 277 VAC. Reserve carryover of 3 years (non-replaceable, non-rechargeable battery). The time switch shall be_____ (Surface)(DIN Rail)(Flush Mountable).

Diagrams

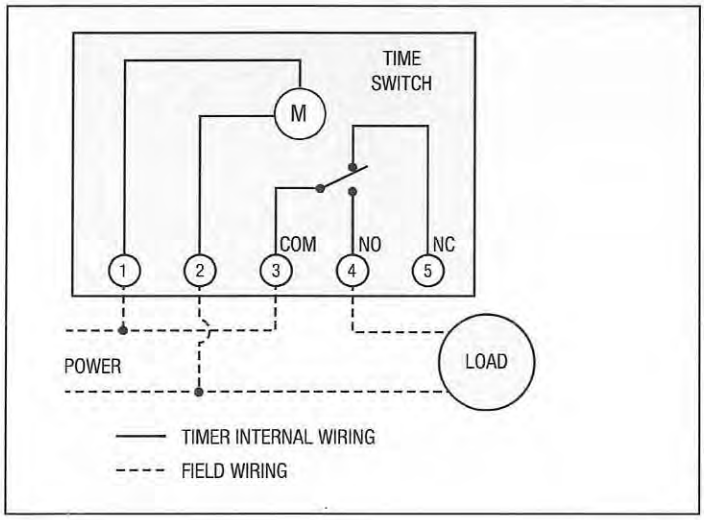

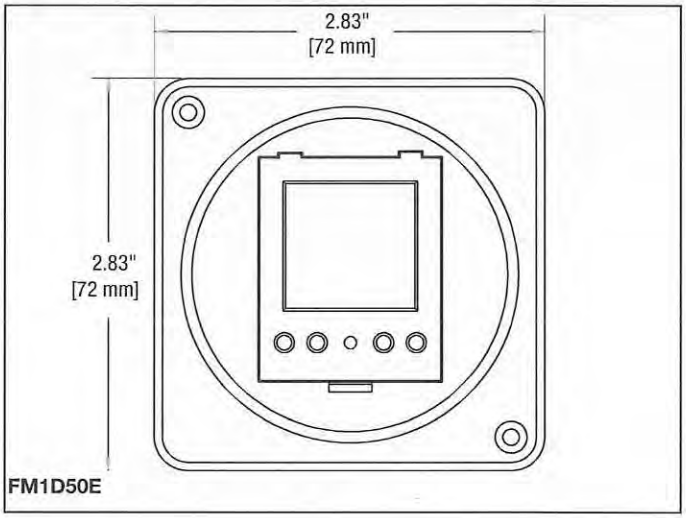

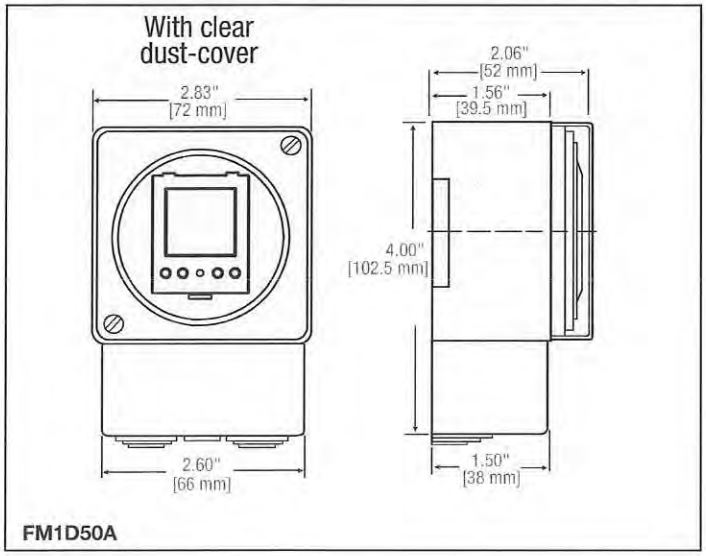

APPENDIX F

Hobbs Meter Information

If you have not found what you are looking for or you have further questions, please feel free to call us at 217-753-7797 or fax us at 217-753-7789. It will help us process your request more efficiently and effectively if you can provide as much detailed information about your requirements/application as possible.

Thanks for considering Hobbs meters from Honeywell!

MANUFACTURING

Honeywell Hobbs' commitment to the customer in past years and present is what has helped us develop our world-class manufacturing systems. Some of the methods by which we continuously improve our products and processes are as follows:

- Six Sigma methodology is a strategy used to accelerate improvements in our processes, products and services, and to reduce manufacturing costs and improve quality. It achieves this by relentlessly focusing on eliminating waste and reducing defects and variations.
- Continous Flow Process utilizing "Rabbit Chase" concepts are used in the focused factories in order to achieve the lowest total cost, defect-free product.
- Single Minute Exchange of Dies (SMED method) provides reduced time in molding cell.
- Statistical Process Control is used for measuring critical dimensions and controlling manufacturing processes.
- Poka-Yoke method and computerized test equipment are utilized to eliminate scrap and rework.
- Kanban cards are used to pull raw material and piece parts through the factory.
- Bar coding and electronic data interchange (EDI) are available.

QUALITY SYSTEMS

It is the goal of Honeywell Hobbs to meet customer value-needs through continuously improved products and processes. That is the basis by which we work to create a partnership with our customers. Evidence of our commitment is proven by a goal of a Shipped Product Quality Level (SPQL) of 100 ppm. We utilize Advanced Quality Planning and QS9000 based quality systems.

© 2003 Honeywell International Inc. All Rights Reserved.

Honeywell

Sensing and Control
www.honeywell.com/hobbs
email: www.honeywellhobbs.marketing@honeywell.com
Honeywell
P.O. Box 19424
Springfield, IL 62794-9424
USA

Catalog 20-1103, GLO Printed in the USA

Honeywell

Sensing and Control

HOBBS:

HOUR METERS

ISO 9001
QS9000

The Hobbs brand is well known worldwide for the development of quality electro-mechanical products. The invention of the first electrically wound automobile clock in 1938 created what is now known as Honeywell Hobbs. John Weston Hobbs was the inventor that cultivated this electrically-wound vehicle clock into a company that has over the years expanded to include hour meters, pressure and vacuum switches, halogen lamps, transmission shifters, and other custom electro-mechanical products. Honeywells' broad customer and market base includes industries such as automotive, agricultural, material handling, construction, marine, medical, heavy truck, lawn and garden, recreational, generators, compressors and aviation. Honeywells' commitment to continuous improvement and total quality management will allow for further expansion of its product lines and customer base while maintaining the highest standards of excellence.

www.honeywell.com/hobbs

Contents:

- LCD ..... P. 3-5
- D.C. ..... P. 6-7
- A.C. ..... P. 8-11
- Accessories ..... P. 11
- Warranty ..... P. 11

Other AC and DC Meters Available

Round Flush with Retainer Mount

Round Slotted 3 screw

Contact Hobbs for more information and specifications on above meters.

Hour Meter Accessories

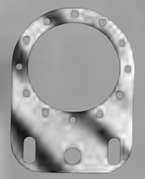

Mounting brackets. For mounting hour meters in any location when panel installation is not practical. Multiple holes allow positioning for easy reading. Foot of bracket can be bent when necessary. Part Number M-329 (2 13/16" x 4") for meter only. Part Number M-558 (4" x 5 1/8") when meter and damper are used together.

Damper. Protects meter from severe vibration. Use on panel or with Part Number M-558 bracket. Part Number M-3888 (3 7/8" dia.) for three-screw type DC meters.

Panel mounting bracket. Designed to bolt to a flat surface area 2 13/16" x 5 1/4". Provides easy-to-read meter position. Part Number M-486 for three-screw type DC meter only.

Angle bracket. For two-screw flange AC and DC rectangular meters only, when panel mounting is not practical. Part Number 23944.

Custom Instrument Panel Clusters

Let Hobbs custom design your display panel saving you time and money. We can assemble a panel to your specifications that frees up your engineering resources, reduces parts counts and reduces your vendor base.

Warranty and remedy

Honeywell warrants goods of its manufacture as being free of defective materials and faulty workmanship. Contact your local sales office for warranty information. If warranted goods are returned to Honeywell during the period of coverage, Honeywell will repair or replace without charge those items it finds defective. The foregoing is Buyer's sole remedy and is in lieu of all other warranties, expressed or implied, including those of merchantability and fitness for a particular purpose.

While we provide application assistance, personally, through our literature and the Honeywell web site, it is up to the customer to determine the suitability of the product in the application.

Specifications may change at any time without notice. The information we supply is believed to be accurate and reliable as of this printing. However, we assume no responsibility for its use.

Sales and Service

Honeywell serves its customers through a worldwide network of sales offices and distributors. For application assistance, current specifications, pricing or name of the nearest Authorized Distributor, contact a nearby sales office or

INTERNET: www.honeywell.com/hobbs

E-mail:
honeywellhobbs.marketing@honeywell.com

Warranty Periods:
The products listed are warranted for the periods shown:

98000 Series.....2 years
85000 Series.....2 years
20000 Series.....2 years

28100 Series

Unlike conventional AC hour meters that are limited to one primary voltage andfrequency, the Hobbs Multi-Range Quartz hour meter will operate over a full range of voltages and frequencies. The meters will work accurately over a voltage range of 90 VAC to 264 VAC and at frequencies of either 50 Hz or 60 Hz. This unique feature means that one hour meter will work for virtually any application anywhere in the world!

Specifications
- Operating Voltage: 90 to 264 VAC
- Frequencies: 50 to 60 Hz
- Temperature Range: -40˚F to +185˚F

Features
- Records time 0 to 99,999.9 hours
- Accuracy ±0.02%
- UL Recognized
- CSA (UL)
- CE Mark
- Totally sealed from dirt and moisture
- Termination
  - 1/4" spade

Benefits
- Reduced parts count
- Reduced inventories
- Fewer purchase orders
- Eliminate production line errors
- Reduce service parts

Options
- Wire leads
- Custom lens
- Terminals (up, down, straight)

WARNING!
Applied voltage not to exceed 264 Vac RMS. This meter was not intended to be used in applications where excessive transient voltages are present. It is the responsibility of the customer to determine the suitability of this device for use in their system.

** Panel cutout dimensions are ± .010 tolerance*
All dimensions shown in inches and (metric)

AC Multi-Range Meters

Retainer Mount

Operating Voltage	Part #
90-264 VAC	28100

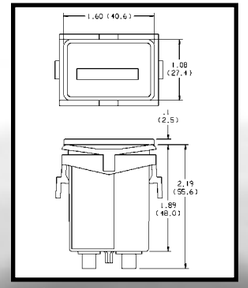

Retainer Mount:
Panel cutout 1.45 x .95
rectangular opening.
*Two .150 holes spaced 1.750**

2 Screw Standard Bezel

Operating Voltage	Part #
90 to 264 VAC	28101

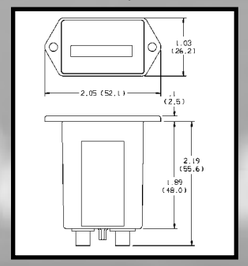

2 Screw Standard:
Panel cutout 1.45 x .95
rectangular opening.
*Two .150 holes spaced 1.750**

2 Screw Deluxe Bezel

Operating Voltage	Part #
90 - 264 VAC	28103

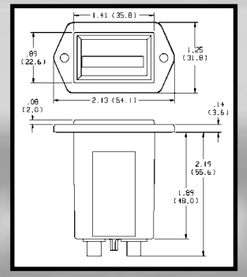

2 Screw Deluxe:
Panel cutout 1.45 x .95
rectangular opening.
*Two .150 holes spaced 1.750**

Round Black Bezel

Operating Voltage	Part #
90 - 264 VAC	28104

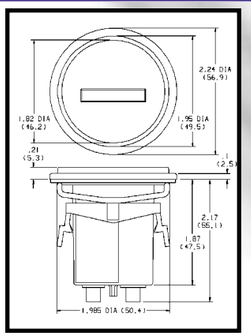

Flush Mount (Retainer) 2.24":
Panel cutout 2.00
*diameter opening**

3 Screw

Operating Voltage	Part #
90 - 264 VAC	28105

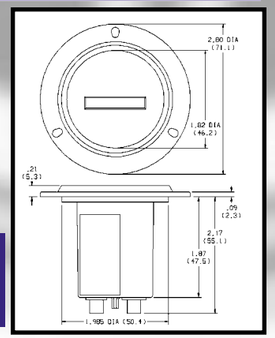

3 Screw Mount:
Panel cutout 2.00 diameter opening
Three .125 holes equally
*spaced on 2.42 bolt circle diameter**

98000 Series

The Hobbs 98000 Series LCD hour meters provide a large easy-to-read display in a conventional size package. The hour meters are available in a variety of mounting styles and voltage ranges that will fit virtually any application.

Specifications:
- Run Accuracy ±200ppm; ±0.02%
- Start Time: maximum 1second
- 6 Digit Display
- Digit Height: 6mm
- Power draw: .8 mA at 12 VDC
  (Power Terminal)
- Termination: 1/4" blade
  3/16" blade optional
- Temperature Range:
  Operating: -40˚C to +85˚C
- Vibration: 20 g's per SAE J1378
- Shock: 55 g's per SAE J1378
- Operating ranges:
  4.5 to 16 VDC (optional)
  9 to 64 VDC
  >64 VDC Contact Factory
- Display:
  0 to 99,999.9 Hours
  0 to 999,999 Counter
- Transient Voltage Protection
  Load Dump
  Inductive
  E M I
  Reverse Polarity

Features
- Totally sealed from moisture and dirt
- Direct replacement for current hour meter
- No battery backup needed
- Fits in existing panel openings
- Custom bezels and dial artwork available
- Snap-in retainer mount combines easy installation with rugged design
- Compact Depth
- Rugged Design
- Pulse Counter Option
- Reset Option
- Run Indicator

** Panel cutout dimensions are ± .010 tolerance*
All dimensions shown in inches and (metric)

LCD Hour Meters

2 Screw Standard Bezel

Operating Voltage	Terminals	Part #
9 to 64 VDC	2 terminal	98310
9 to 64 VDC	3 terminal with enable	98320
9 to 64 VDC	4 terminal resettable	98300

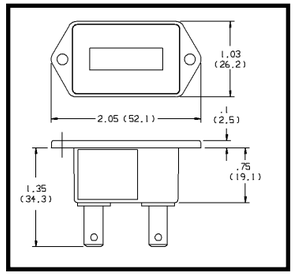

2 Screw Standard:
Panel cutout 1.45 x .95
rectangular opening
Two .150 holes
*spaced 1.750**

2 Screw Deluxe Bezel

Operating Voltage	Terminals	Part #
9 to 64 VDC	2 terminal	98313
9 to 64 VDC	3 terminal with enable	98323
9 to 64 VDC	4 terminal resettable	98303

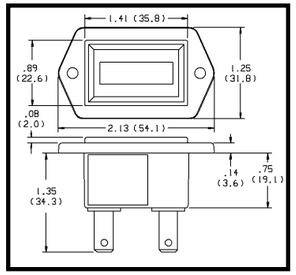

2 Screw Deluxe:
Panel cutout 1.45 x .95
rectangular opening
Two .150 holes
*spaced 1.750**

98000 Series

LCD Meter APPLICATIONS

- Garden Tractors
- Generators
- Utility Vehicles
- Construction Equipment
- Material Handling Equipment
- Recreational Vehicles
- Medical
- Electronic Panels
- Rental Equipment
- Boom Lifts
- Pressure Washers
- Sweepers
- Test Equipment

** Panel cutout dimensions are ± .010 tolerance*
All dimensions shown in inches and (metric)

LCD Hour Meters

Retainer Mount

Operating Voltage	Terminals	Part #
9 to 64 VDC	2 terminal	98311
9 to 64 VDC	3 terminal with enable	98321
9 to 64 VDC	4 terminal resettable	98301

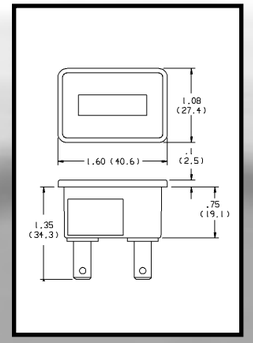

*Retainer Mount: Panel cutout 1.45 x .95 rectangular opening**

Round Chrome Bezel

Operating Voltage	Terminals	Part #
9 to 64 VDC	2 terminal	98314
9 to 64 VDC	3 terminal with enable	98324
9 to 64 VDC	4 terminal resettable	98304

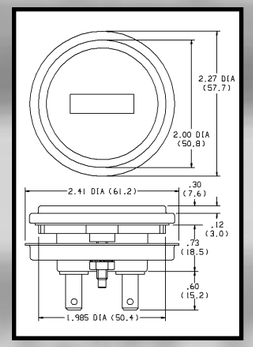

*Flush Mount (Retainer) 2.27": Panel cutout 2.00 diameter opening**

Round Black Bezel

Operating Voltage	Terminals	Part #
9 to 64 VDC	2 terminal	98312
9 to 64 VDC	3 terminal with enable	98322
9 to 64 VDC	4 terminal resettable	98302

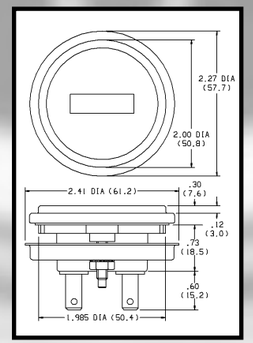

*Flush Mount (Retainer) 2.27": Panel cutout 2.00 diameter opening**

20000 Series Deluxe AC Hour Meters

Rectangular Retainer Mount

Operating Voltage	Hertz	Termination	Part #
108-132 VAC	50	Screw*	20174
108-132 VAC	50	Blade**	20183
108-132 VAC	60	Screw*	20116
108-132 VAC	60	Blade**	20182
216-264 VAC	50	Screw*	20171
216-264 VAC	50	Blade**	20170
216-264 VAC	60	Screw*	20177

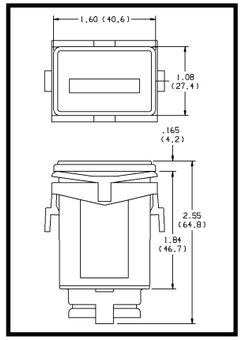

*Rectangular Retainer: Panel cutout 1.45 x .95 rectangular opening**

Square Retainer Mount

Operating Voltage	Hertz	Termination	Part #
108-132 VAC	50	Screw*	20176
108-132 VAC	60	Screw*	20115
216-264 VAC	50	Screw*	20173
216-264 VAC	60	Screw*	20179

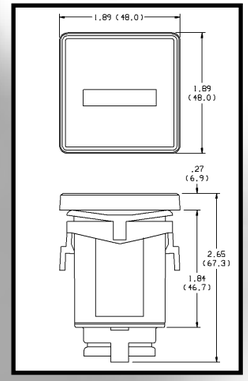

*Square Retainer: Panel cutout 1.45 x .95 rectangular opening**

** UL Listed, CSA Certified and CE Mark*
*** UL Recognized, CSA Certified and CE Mark*

** Panel cutout dimensions are ± .010 tolerance*
All dimensions shown in inches and (metric)

CAUTION: Always make sure power is removed from equipment before working on electrical circuits! Only qualified personnel should make electrical connections. Damage to equipment and/or serious bodily injury can result from improperly made electrical connections, or a failure to adhere to normal electrical safety guidelines.

20000 Series Wiring Diagrams

120VAC Meter Applications

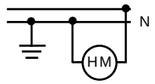

Single phase, 2 wire, 120V system: Connect power wire to one terminal and neutral wire to opposite terminal.

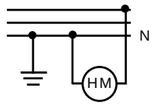

Single phase, 3 wire, 120/240V system: Connect any one power wire to one terminal and the neutral wire to the opposite terminal.

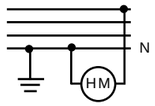

Three phase, 4 wire wye, 120/208V system: Connect any one power wire to one terminal and the neutral wire to the opposite terminal.

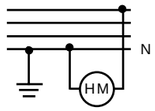

Three phase, 4 wire delta with a high leg, 120/240V system: Connect any one of the two available 120V power wires to one terminal of the meter and the neutral wire to the opposite teminal. Do not connect the high leg (208V) to the meter.

240VAC Meter Applications

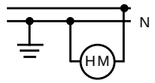

Single Phase, 2 wire, 240V system: Connect power wire to one terminal and neutral wire to opposite terminal.

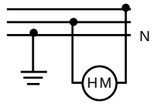

Single phase, 3 wire, 120/240V system: Connect meter across two high sides of the line. Do not connect the neutral wire to the meter.

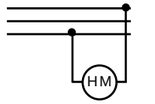

Three phase, 3 wire delta, 240V system: Connect meter across any two power lines.

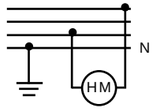

Three phase, 4 wire delta with a high leg, 120/240V system: Connect any one power wire to one terminal of the meter. Connect one of the remaining two power lines to the opposite terminal. Do not connect the neutral wire to the meter.

20000 Series

When there's a need to keep track of run time, quality-minded companies choose Hobbs! Whether it's for testing purposes, leasing applications, maintenance reasons, and/or warranty programs, you want an accurate and reliable hour meter. The Hobbs 20000 Series hour meter delivers!

To ensure our high standards of quality, all parts are in-process inspected. Every meter must pass 100% function and timing accuracy tests before shipping. These "Deluxe" AC meters are also totally sealed and
benefit from an uncommon design which integrates the motor and frame into one substructure.

Specifications

- Records up to 99,999 hours
  Automatic recycle to zero
- 24,120 and 240 VAC models available (Range ±10%)
- 50 and 60 Hertz versions
- 3.0 watts power rating
- Operating temperature: -65°F to +154°F (-54°C to +68°C)
- Accuracy: ±.02%.
- Weight: 3 oz
- Screw termination or 7" lead wires
- Lens material:
  3-screw mount: Glass
  All others: Polycarbonate
- Case material: Polycarbonate
- Number size: 0.12" (3mm)
- UL Listed (File# E47098): Screw terminals
- UL Recognized: Wire lead versions
- CSA Certified (File # LR42455)
- Conforms to MIL-M-3971 *
- CE Mark

Features

- Polycarbonate, shock resistant, tamper proof case
- Totally sealed *
- Single phase, synchronous, permanently lubricated motor
- Custom logo dials, 1/4" blade terminals, special wire lengths.

Options: If you need it, let us know. YOUR satisfaction is our goal!

* Applicable on shown "screw terminal" meters. Contact Hobbs for specifications on other available models.

Deluxe AC Hour Meters

Rectangular 2 Screw

Operating Voltage	Hertz	Termination	Part #
108 to 132 VAC	50	Screw *	20028
108 to 132 VAC	50	7" Leads **	20034
108 to 132 VAC	60	Screw *	20001
108 to 132 VAC	60	7" Leads **	20035
216 to 264 VAC	50	Screw *	20029
216 to 264 VAC	50	7" Leads **	20036
216 to 264 VAC	60	Screw *	20007
216 to 264 VAC	60	7" Leads **	20037

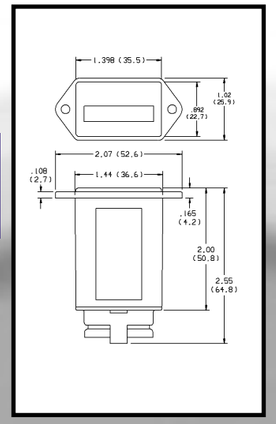

*Two-Screw Mount: Panel cut out 1.45 x .95 rectangular opening. Two .150 holes spaced 1.750.**

Round 3 Screw

Operating Voltage	Hertz	Termination	Part #
108 to 132 VAC	50	Screw *	20016
108 to 132 VAC	50	7" Leads **	20042
108 to 132 VAC	60	Screw *	20017
108 to 132 VAC	60	7" Leads **	20043
216 to 264 VAC	50	Screw *	20018
216 to 264 VAC	50	7" Leads **	20044
216 to 264 VAC	60	Screw *	20019
216 to 264 VAC	60	7" Leads **	20045

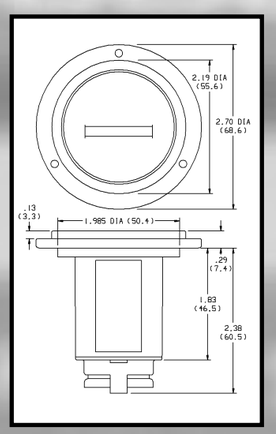

*Three-Screw Mount: Panel cut out 2.00 diameter opening. Three .125 holes equaly spaced on 2.42 bolt circle diameter.**

* UL Listed, CSA Certified and CE Mark
** UL Recognized, CSA Certified and CE Mark

AC APPLICATIONS

- Business machines
- Control panels
- Lighting systems
- Generators
- Compressors & pumps
- Refrigeration
- Air conditioning
- Furnaces
- Lab test equipment
- Sun tanning equipment
- Oxygen concentrators
- Many more!

* Panel cutout dimensions are ± .010 tolerance
All dimensions shown in inches and (metric)

LCD Hour Meter Module

The Hobbs LCD hour meter module is a custom engineered elapsed time meter designed to be mounted directly to your printed circuit board (PCB). It can be used in a variety of AC or DC applications that require an hour meter, counter or odometer for preventive maintenance, warranty verification, renting and leasing.

Specifications

- 6 digit/6mm display
- ±0.02% Accuracy
- Vibration tested per MIL-M-3971D at 10 g's and SAE J1378 at 20 g's
- Shock tested per MIL-M-3971D at 75 g's and SAE J1378 at 55 g's
- Operating temp. range -40°C to +85°C
- Operating voltage range 9 to 64 VDC (optional 4.5 to 16 VDC)
- Transient Voltage Protected
  - Over Voltage
  - Load Dump
  - Inductive
  - EMI
  - Reverse Polarity
- Power Consumption
  .8 ma max at 12V (power terminal)
- Start time: maximum 1 second

All Hobbs modules have crucial components exposed. The module must be sufficiently protected if used in an environment other than specified. Consult Hobbs marketing department when suitability of application is questioned.

Features

- Large easy-to-read numbers
- Silent operation
- Low power demand
- Resettable and nonresettable
- 10 years data retention (without power) over entire temperature range
- UL Recognized, CSA approved
- Pin termination .03 in diameter
- Hours from 0 to 99,999.9
- Counter from 0 to 999,999 pulses
- Voltages greater than 64 VDC contact factory

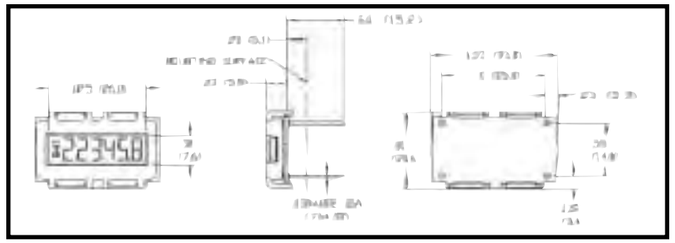

D.C. Version

Operating Voltage	Termination	Part #
9 to 64 VDC with enable & reset	4 pin	98706
4.5 to 16 VDC	4 pin	98707

Counter Version

Operating Voltage	Termination	Part #
9 to 64 VDC with reset	4 terminal	98704
9 to 64 VDC without reset	3 terminal	98705

Options

4.5 to 16 VDC

* Panel cutout dimensions are ± .010 tolerance
All dimensions shown in inches and (metric)

LCD Module APPLICATIONS

- Medical
- Vending Machines
- Floor Cleaning Equip.
- Electronic Panels
- Instrument Panels
- Recreational
- Office Equipment

85000 Series

The 85000 Series provides legendary Hobbs performance and reliability in a technically advanced quartz package. The Quartz Plus features a highly reliable drive mechanism, an improved odometer gear train, and a snap-together integrated chassis. The chassis fits into a shockproof, totally-sealed case made of an engineered plastic that is impervious to acids and solvents.

To ensure our high standards of quality, all parts are in-process inspected. Every Quartz Plus meter must pass 100% function, burn-in, and timing accuracy test before shipping.

Specifications

- 10,000 hour version standard, with automatic recycle to zero
- Temperature range: -40° F to +185° F
  -40° C to +85° C
- Quartz accuracy: ±200ppm, ±0.02% (entire voltage and temperature range)
- Operating voltage range: 5-110 VDC (Voltage range covered by 85000 Series line)
- Precision built relay driven odometer
- Excellent vibration & shock resistance:
  Vibration: 20 g's @ 10-80Hz (SAE J1378)
  10 g's (per MIL-M-3971)
  Shock: 55 g's @ 9-13msec (SAE J1378)
  75 g's (per MIL-M-3971)
- Transient Voltage Protection
  Alternator load dump: 150V
  EMI *(Electromagnetic Interference)*: +400V @ 500Hz
  Inductive switching and reverse polarity
- Standard terminals: 1/4" male blade
- Lens material: Glass
- Case material: Polyester
- Number size: 0.12" (3mm)

Features

- Custom CMOS integrated circuit
- Indicates operating time in hours and tenths, plus has a running indicator
- Totally-sealed
- Battery system voltages: 6,12,24,36,48,60,72,and 80 VDC
- UL Recognized (File number AU1774)
- CSA Certified (File number LR42455-12)
- Conforms to MIL-M-3971

Options:

Custom logos, polycarbonate lenses, and various bezels. Wire, stud, blade, and screw terminals. 100,000 hour, R-Terminal and filtered versions available too.

Quartz Plus DC Hour Meters

2 Screw

Operating Voltage	Part #
6.5-16 VDC	85331
10-32 VDC	85000
10-80 VDC	85094
30-110 VDC	85013

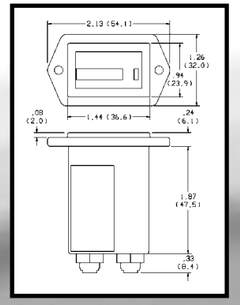

*Two-Screw Mount: Panel cutout 1.45 x.95 rectangular opening. Two .150 holes spaced 1.750. **

3 Screw

Operating Voltage	Part #
10-32 VDC	85001
10-80 VDC	85097
30-110 VDC	85014

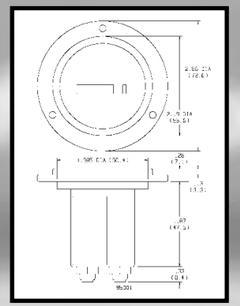

*Three-Screw Mount: Panel cutout 2.00 diameter opening. Three .150 holes equally spaced on 2.53 bolt circle diameter.**

Rectangular Stirrup

Operating Voltage	Part #
10-32 VDC	85010
30-110 VDC	85023

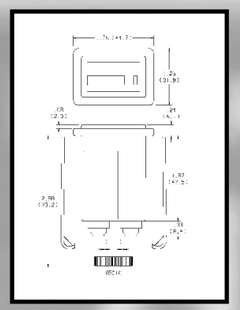

*Rectangular Stirrup: Panel cutout 1.45 x .95 rectangular opening.**

Retainer Mount

Operating Voltage	Part #
10-32 VDC	82001
10-80 VDC	82320

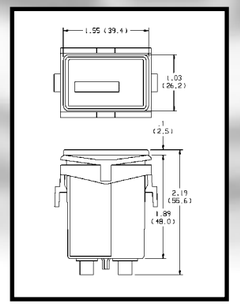

*Retainer Mount: Panel cutout 1.45 x .95 rectangular opening.**

** Panel cutout dimensions are ± .010 tolerance*
All dimensions shown in inches and (metric)

85000 Series Quartz Plus DC Hour Meters

Round Chrome Bezel

Operating Voltage	Part # Flush Cup 2.27"	Part # Flush Cup 2.50"	Part # Stirrup 2.27"	Part # Stirrup 2.50"
10-32 VDC	85002	85006	85004	85008
10-80 VDC	85342	85098		
30-110 VDC	85015	85019	85017	85021

Round Black Bezel

Operating Voltage	Part # Flush Cup 2.27"	Part # Flush Cup 2.50"	Part # Stirrup 2.27"	Part # Stirrup 2.50"
10-32 VDC	85003	85007	85005	85009
10-80 VDC	85093	85099		
30-110 VDC	85016	85020	85018	85022

DC APPLICATIONS

- Lawn Tractors
- Garden Tractors
- Farm Equipment
- Gen Sets
- Construction Equipment
- Utility Vehicles
- Industrial Equipment
- Recreational Vehicles
- Golf Carts
- Aircraft
- Medical Equipment
- Office Equipment
- Any application requiring a very accurate and dependable hour meter.

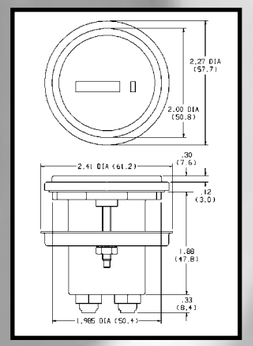

*Flush Mount (Cup) 2.27": Panel cutout 2.00 diameter opening.**

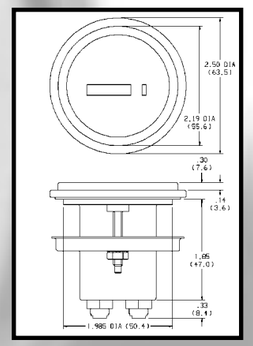

*Flush Mount (Cup) 2.5": Panel cutout 2.00 diameter opening.**

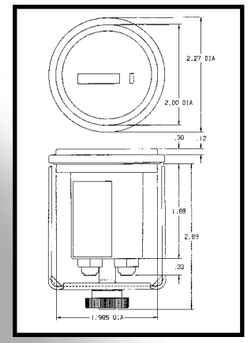

*Flush Mount (Stirrup) 2.27": Panel cutout 2.00 diameter opening.**

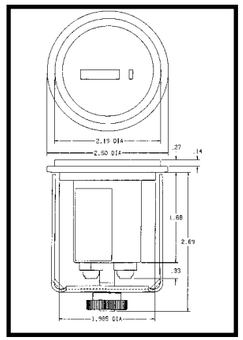

*Flush Mount (Stirrup) 2.5": Panel cutout 2.00 diameter opening.**

** Panel cutout dimensions are ± .010 tolerance*
All dimensions shown in inches and (metric)

85000 Series Wiring Diagrams (Polarity Sensitive)

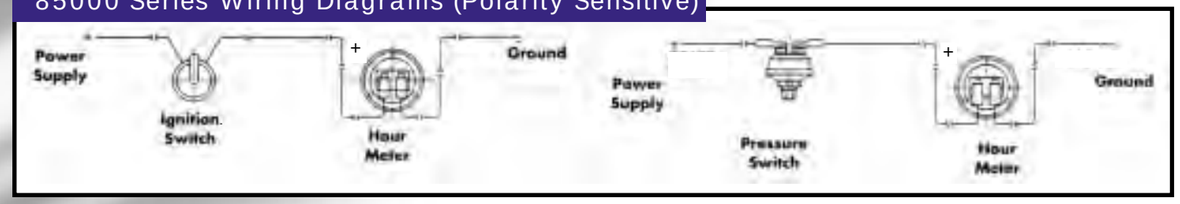

CAUTION: Always make sure power is removed from equipment before working on electrical circuits! Only qualified personnel should make electrical connections. Damage to equipment and/or serious bodily injury can result from improperly made electrical connections, or a failure to adhere to normal electrical safety guidelines

APPENDIX G

Typical Monthly Site Inspection Form

MONTHLY MONITORING LOG
LANDFILL GAS CONTROL SYSTEM
DOYNE PARK LANDFILL

Operation Mode (check one):

Date: _____ Active _____ (blower in operation, complete Section A.)

Performed by: _____ Passive _____ (vents open, complete Section B.)

Section A. Active Mode: blower operation controlled by timer

Blower

Running at time of inspection: Yes / No
If running, vacuum reading at blower: _____mmHg
Power on: Yes / No
Warning lights on: Yes / No
Belt condition/tension ok: Yes / No
Lubrication needed: Yes / No
Lubrication performed: Yes / No
Lubrication (minimum): April / October
Total run time (hour meter reading): _____

General

Piping leaks: Yes / No
Significant corrosion: Yes / No
Paint chipping: Yes / No
Vegetation obstructions: Yes / No

Dialer: (414) 479-9125

Power on: Yes / No
Warning lights on: Yes / No
Dial-in verification: Yes/ No

Condensate Tank Levels (2,000 gal. capacity)

Blower: _____(11.9)_ depth to liquid (ft)
Church: _____(11.5)_ depth to liquid (ft)

Note: Active mode typically includes timed blower operation, thus the blower may not be running at the time of inspection. Levels are measured from top of camlock flange in manhole. Values in ( ) are total depth of tank (ft).

Comments: _____

_____

Section B. Passive Mode: blower shut off and vent valves open

Vents (locations west to east)

V-1 valve open:	Yes / No	Maintenance needed:	Yes / No
V-2 valve open:	Yes / No	Maintenance needed:	Yes / No
V-3 valve open:	Yes / No	Maintenance needed:	Yes / No
V-4 valve open:	Yes / No	Maintenance needed:	Yes / No
V-5 valve open:	Yes / No	Maintenance needed:	Yes / No

Comments: _____

_____

Section C. Stormwater Inlet Observation

Inlet grade north of GW-11 clean: Yes__ No ___