earthtech for the planet.
engineering and technology

Operation and Maintenance Manual

Landfill Gas Migration Control System
Doyne Park
City of Milwaukee
Milwaukee County, Wisconsin

Prepared for:

City of Milwaukee
Milwaukee County, Wisconsin

January 2001

Box #
781916

OPERATION AND MAINTENANCE MANUAL

LANDFILL GAS MIGRATION CONTROL SYSTEM

DOYNE PARK

CITY OF MILWAUKEE

MILWAUKEE COUNTY, WISCONSIN

January 2001

Earth Tech, Inc.
4135 Technology Parkway
Sheboygan, WI 53083

Project No. 40626

WISCONSIN
DONALD F.
PIRRUNG
E-16736
SHEBOYGAN,
WI.
1-10-01
PROFESSIONAL ENGINEER

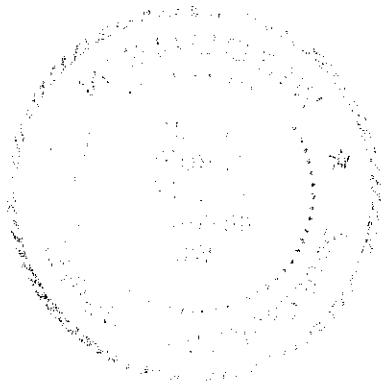

TABLE OF CONTENTS

OPERATION AND MAINTENANCE MANUAL
LANDFILL GAS MIGRATION CONTROL SYSTEM
DOYNE PARK
CITY OF MILWAUKEE
MILWAUKEE COUNTY, WISCONSIN

Section **Page**

1.0 INTRODUCTION 1-1

2.0 DESCRIPTION OF SYSTEM COMPONENTS 2-1
2.1 LANDFILL COVER SYSTEM 2-1
2.2 SURFACE WATER CONTROLS 2-1
2.3 LANDFILL GAS EXTRACTION SYSTEM 2-1
2.3.1 Dialer 2-2
2.4 CONDENSATE EXTRACTION SYSTEM 2-2
2.5 LANDFILL GAS MIGRATION MONITORING SYSTEM 2-2

3.0 OPERATION/CONTROLS 3-1
3.1 LANDFILL COVER SYSTEM 3-1
3.2 SURFACE WATER CONTROLS 3-1
3.3 LANDFILL GAS EXTRACTION SYSTEM 3-1
3.3.1 Startup 3-1
3.3.2 Normal Operation 3-2
3.3.3 Sampling Procedures and Instrumentation 3-3
3.3.4 Blower Flow vs. Amperage 3-3
3.3.5 Passive Venting 3-4
3.4 CONDENSATE EXTRACTION SYSTEM 3-4
3.5 LANDFILL GAS MIGRATION MONITORING SYSTEM 3-4

4.0 MAINTENANCE 4-1
4.1 LANDFILL COVER SYSTEM 4-1
4.1.1 Clay Cover Component 4-1
4.1.2 Topsoil Component 4-1
4.1.3 Revegetation 4-1
4.1.4 Mowing 4-2
4.1.5 Reseeding 4-2
4.2 SURFACE WATER CONTROLS 4-2
4.3 LANDFILL GAS EXTRACTION SYSTEM 4-2
4.3.1 LFG Header 4-2
4.3.2 Blower 4-3
4.3.3 Valves 4-3
4.4 CONDENSATE EXTRACTION SYSTEM 4-4
4.5 LANDFILL GAS MIGRATION MONITORING SYSTEM 4-4

5.0 POTENTIAL OPERATION CONCERNS 5-1
5.1 LANDFILL COVER SYSTEM 5-1
5.2 SURFACE WATER CONTROLS 5-1
5.3 LANDFILL GAS EXTRACTION SYSTEM 5-1

Section **Page**

5.3.1 Well Replacement 5-1
5.3.2 Loss of Vacuum at Wellhead 5-3
5.3.3 Oxygen in LFG Extraction System 5-3
5.3.4 Power Failure 5-4
5.3.5 Condensate Blockage 5-5
5.4 CONDENSATE EXTRACTION SYSTEM 5-5
5.5 LANDFILL GAS MIGRATION MONITORING SYSTEM 5-5

6.0 MONITORING AND TESTING 6-1
6.1 LANDFILL COVER SYSTEM 6-1
6.2 SURFACE WATER CONTROLS 6-1
6.3 LANDFILL GAS EXTRACTION SYSTEM 6-1
6.3.1 Introduction 6-1
6.3.2 LFG Migration Monitoring 6-1
6.3.3 LFG Extraction Performance Monitoring 6-2
6.3.4 Reporting and Schedule 6-2
6.4 CONDENSATE EXTRACTION SYSTEM 6-2
6.5 RECORDKEEPING AND REPORTING PROCEDURES 6-2

7.0 ALTERNATIVE OPERATION 7-1
7.1 LANDFILL COVER SYSTEM 7-1
7.2 SURFACE WATER CONTROLS 7-1
7.3 LANDFILL GAS EXTRACTION SYSTEM 7-1
7.4 CONDENSATE EXTRACTION SYSTEM 7-1
7.5 LANDFILL GAS MIGRATION MONITORING SYSTEM 7-1

8.0 CORRECTIVE ACTIONS FOR SYSTEM FAILURES 8-1
8.1 LANDFILL COVER SYSTEM 8-1
8.2 SURFACE WATER CONTROLS 8-1
8.3 LANDFILL GAS EXTRACTION SYSTEM 8-1
8.4 CONDENSATE EXTRACTION SYSTEM 8-1
8.5 LANDFILL GAS MIGRATION MONITORING SYSTEM 8-1

9.0 SAFETY 9-1
9.1 SAFETY CONSIDERATIONS 9-1
9.1.1 Potential Safety Hazards 9-1
9.2 SAFETY PRECAUTIONS 9-1
9.2.1 Gas Monitoring 9-1
9.2.2 General Safety Practices 9-1
9.3 EMPLOYEES RESPONSIBILITY FOR SAFETY 9-2
9.3.1 Contingency Planning 9-2
9.3.2 Intoxicating Beverages and Drugs 9-2
9.4 VISITORS 9-2
9.5 EMERGENCIES 9-2
9.5.1 Accidental Spills 9-2
9.5.2 Fires/Explosion 9-3
9.5.3 Severe Weather 9-3
9.5.4 Emergency Procedures 9-3
9.6 SAFETY EQUIPMENT 9-3

Section **Page**

9.7 FIRST AID 9-4
9.7.1 Personnel Accidents 9-4

10.0 REPORTING 10-1
10.1 QUARTERLY MONITORING 10-1
10.2 ANNUAL REPORTS 10-1
10.3 MISCELLANEOUS INFORMATION 10-2
10.3.1 Laboratory Test Results 10-2
10.3.2 Landfill Gas Well Inspection 10-2
10.3.3 LFG Probe Monitoring 10-2
10.3.4 Accidental Spills 10-2
10.3.5 Incident Report 10-2
10.4 SAMPLE FORMS 10-3

LIST OF TABLES

Table **Follows Page**

6-1 LFG Migration Control System Monitoring Plan 6-1

LIST OF APPENDICES

Appendix

A Drawings
B Manufacturer's Instructions for Blower Station
C Manufacturer's Instruction for Dialer
D Manufacturer's Instruction for Methane Detector
E WDNR Conditional Approval Letter
F MMSD Approval for Condensate Discharge and MH Location

1.0 INTRODUCTION

The landfill gas migration control system is designed to actively extract or passively vent landfill gas from vertical wells located along the south side of Doyne Park. A header pipe conveys collected gas to a blower (active extraction) or to vents (passive extraction). Condensate drains by gravity into underground collection tanks.

The complete system includes 38 vertical gas extraction wells, wellhead vaults, horizontal gas header piping, 5 gas vent stacks, 2 condensate drains, 2 condensate collection tanks, and blower. System layout drawings and details are provided in Appendix A.

The system design was prepared by Rust Environment & Infrastructure, now known as Earth Tech, 4135 Technology Parkway, Sheboygan, Wisconsin 53083, Attn: Mr. Don Pirrung, P.E., Project Manager, Phone No. (920) 451-2822. The Contractor was RTE Environmental Solutions, 5661 West 120th Street, Alsip, Illinois 60658, Attn: Mr. Ed Stearns, Mr. Tom Preskar, or Ms. Carmen Benza, Field Superintendent, Phone No. (708) 388-7550.

This Operation and Maintenance (O&M) Manual was prepared for the Landfill Gas Migration Control System at Doyne Park. This manual provides recommendations for the long-term operation and maintenance of the landfill gas migration control system. This manual presents guidelines for the maintenance and service of equipment, frequency of performing maintenance and service, and checklists for routine inspections.

The components covered in this O&M Manual include:

- Landfill Cover System
- Surface Water Controls
- Landfill Gas Extraction System
- Condensate Extraction System
- Landfill Gas Migration Monitoring System

This O&M Manual is intended to be used in conjunction with the General Installation, Operation and Maintenance, and Instructions for Aerovent Products, dated September 1996. These instructions provide operation and maintenance information for the landfill gas blower station and are included in Appendix B.

2.0 DESCRIPTION OF SYSTEM COMPONENTS

2.1 LANDFILL COVER SYSTEM

Portions of the Doyne Park cover system were removed to allow for the construction of the landfill gas migration control system. The new landfill cover which was placed around these system components include, from bottom to top:

- A low permeability clay barrier layer, with a minimum compacted thickness of 42 inches, constructed to limit surface water infiltration into the waste mass and to provide a barrier between the waste and the environment.

- A soil layer consisting of a minimum of 6 inches of topsoil. Seed, mulch, and fertilizer were applied to this layer to establish a vegetative cover to reduce soil erosion.

2.2 SURFACE WATER CONTROLS

Six erosion gulleys on the steep slopes located along the north side of the site were restored with the following materials, from bottom to top:

- A low permeability clay layer (thickness varies) was constructed to fill in the areas where erosion has occurred; this layer will also serve to limit surface water infiltration and provide a barrier between the waste and the environment.

- A soil layer consisting of a minimum of 6 inches of topsoil. Seed and fertilizer were applied to this layer to establish a vegetative cover to reduce soil erosion.

2.3 LANDFILL GAS EXTRACTION SYSTEM

Landfill gas (LFG) is collected from 4-inch diameter vertical extraction wells which were installed in 36-inch diameter boreholes (backfilled with 1-inch to 3-inch gravel). Collected LFG is conveyed through 4-inch diameter buried high density polyethylene (HDPE) pipes (laterals) which connect to a common 8-inch diameter buried main HDPE header. A blower generates vacuum to draw LFG from the landfill. Discharge is to the atmosphere. The methane concentration in the vented gas tends to be low compared to typical LFG. The blower is an Aerovent Blower Model W26/12 HPB-3500-15. Blower operation and maintenance information is provided in Appendix B.

If methane levels diminish and WDNR approves turning off the active extraction system (vacuum applied to the wells by the blower), the system can be converted to passive gas extraction. The conversion would involve shutting off the blower and opening the butterfly valves adjacent to each of the five vertical aboveground gas vents which are located along the header system. The vents each consist of 4-inch diameter steel pipe which extends 12 feet above grade with an aluminum ventilator on top.

The active gas extraction system is currently operated using a timer. In 2000, the blower ran for 4 hours, then off for 4 hours throughout the 24-hour period. This pattern is proposed to continue unless gas probe monitoring detects elevated methane levels. If that occurs, the blower will operate for longer periods as appropriate. The timer is adjustable.

2.3.1 Dialer

If the blower malfunctions due to equipment problems or loss of power, a dialer will alarm and contact whoever is programmed into the dialer. The dialer can be telephoned to check the status of power and also has a microphone so the listener can hear the blower operating if the blower is in the operating mode at the time of the call. The dialer number is (414) 479-9125. Appendix C contains information on the Raco dialer.

In 2001, the caller list programmed in the dialer is as follows:

1. John Bruskewitz, Dakota Intertek (414) 406-8319
2. Don Pirrung, Earth Tech (920) 451-2822
3. Brian Hein, Dakota Intertek (414) 406-8311
4. Bill Kralj, Earth Tech (414) 225-5115

2.4 CONDENSATE EXTRACTION SYSTEM

LFG condensate is removed from the system at two condensate drains which are located at low points within the header system. Condensate flows from each drain through 2-inch diameter HDPE pipe to adjacent 2,000-gallon underground collection tanks. Condensate is pumped out of the tanks and is transported by tanker truck to the sanitary sewer manhole in the Doyne Park Clubhouse parking lot. The sanitary sewer is part of the Milwaukee Metropolitan Sewerage District (MMSD).

Condensate in the header near gas well GW-1 flows back into the well GW-1. Condensate in the header from GW-2 to GW-7 flows back into gas well GW-7. From GW-7 to GW-11, condensate in the header flows into the storage tank located near GW-11. This storage tank is near Sacred Heart School. Refer to Drawing No. 2 for the site plan, and Drawing No. 9 for the condensate drain details. From GW-24 to GW-11, condensate in the header drains to the storage tank near GW-11. Condensate in the header from GW-25 through GW-38 flows to the storage tank located near the blower.

2.5 LANDFILL GAS MIGRATION MONITORING SYSTEM

Monitoring for potential LFG migration is to be conducted at 34 gas probes located around the perimeter of Doyne Park. In addition, methane detectors were installed in the basements of residences located south of Doyne Park and north of West Wells Street. The methane detectors are manufactured by American Sensors, Model No. NG2000 Natural Gas Detectors, phone number 1-800-387-4219, in Toronto, Canada M2H 3S5. These units plug into an electrical outlet and have a 5-year warranty. Additional information on the methane detector is provided in Appendix D.

3.0 OPERATION/CONTROLS

This section provides operation and procedural descriptions for the components of the landfill gas migration control system and applicable system controls.

3.1 LANDFILL COVER SYSTEM

The landfill cover is passive and requires no specific controls. Inspection and maintenance are discussed in Section 4.0.

3.2 SURFACE WATER CONTROLS

Surface water flow control is achieved with grass and riprap-lined channels. Surface water control components require maintenance, as discussed in Section 4.0.

3.3 LANDFILL GAS EXTRACTION SYSTEM

This section presents the startup and operation of the active LFG extraction system. The active LFG extraction system includes the wells, wellhead assemblies, transmission piping and valving, and blower. Components of the active LFG extraction system need to be operated simultaneously to result in a balanced system.

3.3.1 Startup

At system startup, the first step is to determine if each component of the active LFG extraction system is functioning and correctly positioned. The next step in startup of the LFG extraction system is a static condition check, followed by dynamic balancing and monitoring adjustments. Upon completion of these startup steps, the system will be placed into operation.

3.3.1.1 Static Conditions

To check wellhead static pressures, close all wellhead valves in the LFG extraction system and record pressures at wellheads.

To check well field total static pressure, first inspect LFG condensate drains and condensate collection tanks to assure that cover plates and caps are secured. Next, inspect valves adjacent to each vent to assure that the valves are closed. Then, open all wellhead valves. The butterfly valve at the blower (system throttling valve) should remain closed. Thirty minutes after opening the wellhead valves, measure the well field total static pressure and methane concentration at the sample port on the inlet side of the valve near the blower.

This information will serve as baseline data under static conditions. The next step is to indicate blower operation and dynamic conditions.

Static LFG conditions can also be determined at each well by closing the wellhead valve and measuring the static pressure, methane content, and oxygen content at the sample port on the wellhead.

3.3.1.2 Dynamic Conditions

Use of the blower will be required to create a vacuum on the LFG extraction system and maintain gas extraction. To start the blower, the following steps should be taken.

If the LFG extraction system was operating passively, check the blower to make sure it is operable. Adjust the valves at each wellhead and the system throttling valve in the header pipe to settings established for blower operation. This throttling valve is on the suction side of the blower. Start the blower. Regulate well field pressures by repositioning the wellhead valves and system throttling valve. Monitor the system for methane and oxygen concentration.

3.3.1.3 System Balancing

Adjust individual wellhead and header butterfly valves to maximize flow and minimize oxygen intrusion. This task will be performed as follows:

1. Adjust wells furthest from the blower first and progress toward the blower.

2. Monitor and record the following parameters as each wellhead is adjusted:

   - Vacuum.
   - Oxygen concentration.
   - Methane concentration.
   - Valve setting.

   Adjust the valves on these wells to provide a 5 percent or less oxygen concentration, if possible. It is possible that even at a minimum valve setting, excessive oxygen is still present at certain wells. In the case of Doyne Park, the methane concentration is generally low, and therefore, the oxygen concentration is high and can be expected to be greater than 3 percent.

3. As the flow and vacuum throughout the LFG extraction system is adjusted during the balancing activities, there is the potential for conditions to change at a well that has been previously adjusted. Therefore, it is important to reverify oxygen levels in all wells within 24 hours of the initial adjustments. This is done to detect oxygen intrusion at an early stage in the system operation. If excessive oxygen is detected, adjust the wellhead butterfly valves until the oxygen is less than 1 percent at the well (with exception noted in 3.3.1.3.2.).

At the completion of balancing activities, monitor and record the following parameters:

- Vacuum (at wellheads and blower inlet).
- Oxygen content (at wellheads and blower inlet).
- Methane content (at wellheads and blower inlet).
- Valve setting (at all wellheads and at the system throttling valve).
- Obtain LFG samples at the inlet side of blower in accordance with the LFG Monitoring Plan (see Section 6).

3.3.2 Normal Operation

After startup procedures have established a balanced well field and checks of automatic controls have been carried out, the active LFG extraction system can be considered in operation. During operation, the system should have periodic inspection and maintenance as required.

3.3.2.1 Operational Checks

The following conditions should be checked monthly:

- Blower amperage and blower flow rate.
- Pressure at blower inlet and outlet.
- Pressure at condensate drain locations.

Other items will be included from time to time on the maintenance schedule and formal reporting inspections. Section 4.0 covers maintenance. Manufacturer's data is included in Appendix B. Monitoring is outlined in Section 6.0.

3.3.3 Sampling Procedures and Instrumentation

Sampling should be performed to determine the maximum LFG flow rate possible without an oxygen breakthrough of greater than 5 percent. In the case of Doyne Park, the low methane levels and high oxygen levels may result in oxygen levels exceeding the 5 percent at the well. If little or no methane is present, oxygen levels can be expected to reach atmospheric conditions of 16 percent.

3.3.3.1 LFG Concentrations

Monitoring locations for LFG concentrations are sample ports which are installed on the wellheads and on the header piping system.

3.3.3.2 Total System Gas Flow

LFG flow in the extraction system can be estimated using blower data.

3.3.3.3 Wellhead and System Vacuum

LFG sample ports which are installed on the wellheads allow for the measurement of vacuum at different locations throughout the LFG extraction system. Vacuum and pressure measurements can be made with a gauge that reads in inches of water column. Care should be exercised when taking pressure or vacuum readings to keep the gauge level and upright.

3.3.4 Blower Flow vs. Amperage

It is often helpful to determine LFG flow rate at the blower. LFG flow can be correlated to the amperage needed for the blower to operate. Typically, as the LFG flow rate increases, the blower motor amperage requirement will increase as more power is required to operate the blower. Field testing is necessary to determine the LFG flow versus amperage correlation. The following procedure should be used for determining LFG flow based on amperage:

1. Adjust the system throttling valve to initial setting (1/4 open).
2. Start blower.
3. Measure blower inlet pressure.
4. Measure amperage draw at the blower motor with an ammeter.
5. Adjust the system throttling valve and repeat Steps 3 and 4.
6. Compare the data to the blower performance curve, supplied by the manufacturer, to determine that there is a reasonable correlation.

From this field test data, a table can be developed which correlates LFG flow with amperage. This information can be used to make periodic inspections of the blower and active LFG extraction system performance.

During system startup, an orifice plate having a 3-inch diameter orifice was installed on the suction side near the blower to increase the frictional head and thereby keep the blower operating on its system curve. Blower operations have worked well with this arrangement.

3.3.5 Passive Venting

Use of the passive vents is possible if either one of the following two cases occur:

1. If the blower malfunctions and will be out of service for more than 24 hours, switch the system from active to passive venting to allow ventilation of the system.

2. If methane levels in the gas probes are zero, and methane levels in the gas wells are less than 3 percent, or if WDNR allows full-time operation of passive vents, then switch the system from active to passive venting. The value of 3 percent methane is arbitrary and should be further discussed with WDNR based on past historical information and to protect public safety. Review the WDNR Conditions of Approval contained in Appendix E.

3.3.5.1 Switch Over From Active Extraction to Passive Venting

To switch over from active extraction to passive venting, perform the following:

1. For passive venting, at least one of the conditions noted in Section 3.3.5 exists regarding low methane levels, blower malfunction, or WDNR approval to operate passive venting has occurred.

2. Turn off the blower.

3. Open the butterfly valve adjacent to each of the five vertical aboveground gas vents which are located along the header system. The vents each consist of 4-inch diameter steel pipe which extends 12 feet above grade with an aluminum ventilator on top.

3.4 CONDENSATE EXTRACTION SYSTEM

Condensate is collected by two condensate drains and two condensate collection tanks located at low points in the system. Periodically, condensate will be pumped out of the tanks and will be transported in tanker trucks to the Milwaukee Metropolitan Sewerage District (MMSD) for treatment.

As discussed in Section 2.4, some condensate drains back to selected gas wells. Condensate is typically removed quarterly from the storage tank near the blower. Condensate from the storage tank near Sacred Heart Church is typically pumped out semi-annually based on past operation. The condensate levels in these storage tanks should be checked monthly.

3.5 LANDFILL GAS MIGRATION MONITORING SYSTEM

The LFG migration monitoring system consists of screened probes installed in the soil and waste along the southern perimeter of Doyne Park. The probes have no mechanical parts; therefore, operation is reliable and maintenance is minimal. Maintenance is described in Section 4.0 and sampling is described in Section 6.0 of this O&M Manual.

4.0 MAINTENANCE

This section discusses the maintenance of the landfill gas management system. Mechanical maintenance requirements will follow manufacturer's recommendations which are included in Appendix B.

4.1 LANDFILL COVER SYSTEM

The landfill cover system consists of clay soil and topsoil. Maintenance of the cover system involves repair of settlement areas, areas void of vegetation, and areas affected by erosion.

4.1.1 Clay Cover Component

The following are steps to repair settlement where the clay barrier layer is affected:

1. Install temporary silt control downstream and surface water controls upstream of where repairs are to occur.

2. Mark all underground features such as condensate piping, LFG piping, electrical lines, and other utilities.

3. When excessive settlement is noted and clay barrier layer damage is suspected, remove and stockpile topsoil layer. Segregation of topsoil from clay is necessary.

4. Clay soil can be added to the existing clay barrier layer or the existing clay can be excavated and appropriate fill placed to bring the area to acceptable grades. Adding clay is preferred since waste is not exposed and tie-in to adjacent clay is not necessary.

5. Document clay placement and compaction in accordance with the original Construction Quality Assurance Plan.

6. Replace topsoil layer and revegetate.

4.1.2 Topsoil Component

Topsoil may be impacted by erosion or by repairs to other components, such as the LFG extraction piping. When maintenance is required, the amount of soil needed should be estimated and arrangements for stockpiling and delivery of topsoil should be made.

Temporary silt and surface water controls should be installed first. Initial regrading should be followed by a check of topsoil layer thickness. Final grading should provide positive drainage from the repair area. Seeding should be in accordance with Section 4.1.3 of this manual. Care should be taken during final grading to assure the area is tracked perpendicular to the slope to minimize channelization of surface water.

4.1.3 Revegetation

The seeding mix selected in the design and construction documents was based on vegetation varieties used by Milwaukee County Parks Department. Weather and site conditions will require that maintenance be performed to sustain healthy vegetation. Reseeding may be necessary in bare areas created due to weather stress or construction activities. Revegetation will be performed as soon as practical with consideration of the local growing season and seasonal weather conditions.

4.1.4 Mowing

At Doyne Park, mowing is performed on a regular basis for golf course maintenance. Mowing also serves to establish a full and vigorous vegetative stand and to limit the establishment of weedy and woody plants.

4.1.5 Reseeding

If reseeding is required, the seeding mix approved by Milwaukee County Parks Department will be used. If reseeding is required in areas that were seeded with a temporary mix, no-till planters may be used. This method of seeding preserves the cover that exists and has been shown to successfully reestablish vegetation.

The seeding rate and species may require modification due to availability or site experience with initial vegetation species. The new mix will be based on sound agricultural practice and will be selected to be compatible with Milwaukee County Parks Department guidelines.

4.2 SURFACE WATER CONTROLS

Surface water ditches require mowing and, from time to time, reshaping to better control the runoff. After vegetation is established, ditches and channels may be mowed to control excess vegetation within the ditches.

When erosion or siltation within the ditches restricts the growth of vegetation, silt removal will be required. Reshaping of the ditches to remove silt will be required. Maintenance will be performed when an inspection indicates a buildup of 6 inches or more of sediment.

Erosion can create a gulleying condition in the ditches. Repairs to eroded ditches will be required when mowing access is limited. Spot repairs by hand shoveling and seeding may be done or the ditch can be regraded.

When regrading disturbs more than 100 linear feet of ditch, erosion mat or other erosion controls should be utilized to promote revegetation and prevent further erosion.

Primary areas for attention at Doyne Park are the steep slopes located along the north side of the site near the Menomonee River, and the ditch along the west side of Doyne Park. Segments of the ditches have been concreted. Maintain the soil at the ditch inlets to avoid soil erosion at the concrete inlet.

4.3 LANDFILL GAS EXTRACTION SYSTEM

4.3.1 LFG Header

Maintenance on the LFG header is expected to be minimal based on experience from other sites. The most typical concerns are crushing due to unexpected traffic or excavation, and condensate blockage.

A broken or blocked LFG header section must be located and repaired. If a LFG pipe section is broken, it must be replaced. If a LFG pipe section is found to be blocked, it will need to be cleared. In areas where settlement has caused condensate to build up and cause blockage, the LFG header pipe will be elevated to the original designed slope. Repair to soil components above the header pipe will be carried out as described in Section 4.1.

4.3.2 Blower

The physical condition of the blower housing, silencer, piping, discharge stack, and motor will be inspected regularly, and typically monthly. The stack will be replaced when excessive corrosion or perforation of the metal stack is noted.

Maintenance of the area near the pad on which the blower is mounted will include removal of vegetation. Concrete surface maintenance will be limited to repairs on an as-needed basis.

4.3.2.1 Blower Maintenance

Perform the following maintenance on the blower:

1. Maintain the finish on the blower discharge stack by cleaning any scratches or chips with a wire brush and repainting with touch-up paint.

2. Inspect all wiring and connections for any wear and replace as necessary.

3. Check all piping connections for tightness and leaks. Replace gaskets as necessary and retorque bolts.

4. Check blower alignment. Re-shim if necessary and retorque anchor bolts.

5. For additional maintenance directions, refer to manufacturer's instructions in Appendix B.

6. Lubricate the blower bearings according to manufacturer's instructions.

7. Replace motor bearings according to manufacturer's recommendations.

8. Check and adjust tension on drive belts.

The blower fan, coupling, and electric motor are a standard manufactured unit. Maintenance will be in accordance with the manufacturer's requirements included in Appendix B. Should any blower problems arise, refer to the manufacturer's instructions included in Appendix B.

4.3.3 Valves

LFG header valves and wellhead valves are plastic. During inspections, the valve handle should be turned to determine if the valve is operable. Excessive resistance may mean partial blockage of the valve. If necessary, the valves may be removed to clean and inspect the valve seats. If the valve is still inoperable, it will be replaced.

At the wellhead, valve operation can be checked by monitoring the pressure gauge. Record the initial reading on the gauge and then turn the valve toward the closed position. Note whether the gauge pressure changes. If pressure changes, return valve to the operating position as indicated by initial pressure reading. If no response is noted, the valve may need to be replaced. Checking of the valve operation can also be done by sound. Move the valve to closed position and monitor for leakage indicated by the sound of gas moving through the valve. If leakage is occurring, replace valve.

4.4 CONDENSATE EXTRACTION SYSTEM

The condensate drains and collection tanks will be maintained in accordance with the maintenance schedule as follows:

1. Monitor liquid level in condensate tanks monthly.

2. Pump out condensate when it reaches 3/4 full.

3. Based on past operation, condensate must be pumped out of the storage tank near the blower quarterly.

4. Based on past operation, condensate must be pumped out of the storage tank near Sacred Heart School semi-annually.

5. Seasonal fluctuations in condensate generation will occur.

6. Condensate is to be removed by tanker truck and discharged to the sanitary manhole located at the Doyne Park Clubhouse parking lot. The sanitary sewer is part of MMSD. Refer to Section 6 regarding monitoring of condensate.

4.5 LANDFILL GAS MIGRATION MONITORING SYSTEM

LFG probes will not require specific maintenance. Probes will be inspected when they are monitored. Any damage to LFG probes should be noted and repairs or replacement as needed will be performed before the next monitoring event.

5.0 POTENTIAL OPERATION CONCERNS

This section identifies potential concerns with respect to the operation of the landfill gas migration control system. When system or equipment problems occur, Milwaukee County personnel will contact the design engineer, installation contractor or vendor for assistance.

5.1 LANDFILL COVER SYSTEM

Since the landfill cover system is passive, there are no potential operation concerns. Maintenance of the landfill cover system is discussed in Section 4.0.

5.2 SURFACE WATER CONTROLS

To remain operational, the surface water control ditches will need to be maintained. Maintenance is discussed in Section 4.0. The greatest concern that could affect operation of the surface water controls is that large storm events may cause erosion within the drainage channels. Regular maintenance and inspection of the surface water control system will identify any areas that require repair.

5.3 LANDFILL GAS EXTRACTION SYSTEM

Operation of the LFG extraction system is dependent on the proper functioning of the LFG vertical extraction wells, wellheads, transmission piping and valving, condensate drains, condensate collection tanks, vents, and blower. This section provides a brief discussion of potential operational concerns based on past gas system experience.

5.3.1 Well Replacement

If a LFG extraction well is damaged or clogged, it may need to be replaced. This section describes the following two potential LFG well replacement scenarios:

1. Partial replacement, which includes ground seal and wellhead.
2. Full well replacement.

5.3.1.1 Partial Well Replacement

The wellhead contains a valve and a flexible hose which connects the well to the lateral. Damage to the flexible hose, or valve, or breaks due to material fatigue may create the need to replace the wellhead assembly. See construction drawings for typical wellhead.

Replacement procedures, assuming that the well has been isolated from the lateral or header by valving or installation of an inflatable plug, are as follows:

1. Inventory damaged well and wellhead parts, and purchase replacements.
2. Disconnect the flexible hose.
3. Disconnect the valve.

*** CAUTION ***

WELL MAY BE EXHAUSTING LANDFILL GAS; PERSONAL PROTECTION MAY BE REQUIRED.

4. Replace the valve assembly.
5. Connect flexible hose to valve.
6. Close new valve.
7. Remove inflatable plug from lateral (if used).
8. Open valve and inspect for leakage.
9. Rebalance well system as described in Section 3.0.
10. Repair landfill cover system as described in Section 4.0.

If a wellhead is damaged, the ground seal as well as the vertical riser may be damaged. If this condition is suspected, removal of the wellhead vault and excavation of the landfill cover around the wellhead vault is necessary to replace the seal. Well seal specifications are contained in the construction documents and are applicable to such repairs.

For damaged pipe, remove the damaged section. Trim surface and clean pipe exterior to prepare for installing coupling. Extend new pipe section to required height above seal. Reassemble wellhead connections.

Backfill excavations with the same type of landfill cover layer material excavated. The original construction specifications provide the material and installation requirements. The well/ground seal shall be installed as the excavation is filled. All disturbed soil shall be revegetated in accordance with Section 4.0.

5.3.1.2 Full Well Replacement

Full well replacement will require a contractor. Construction specifications contained in the construction documents provide the requirements for materials and installation of a new well. The replacement well should be installed 10 to 15 feet from the old well and upslope from the old well. This will allow the new well's potential influence on existing wells will be similar to the one being replaced. The location of the new well should be close enough to allow for extending the header/lateral pipe.

General steps for well replacement are as follows:

1. Disconnect existing wellhead and plug the LFG lateral where disconnected.

2. Prepare new well site by stripping topsoil and preparing an area to temporarily stage the waste removed during drilling. This temporary staging area can be a bermed area, a pit excavated through the landfill cover or a rolloff box.

3. Remove vault, wellhead, and well seal.

4. Remove top 6 feet of the existing well after filling the well with grout. Removal of the top 6 feet of the well is intended to make sure there is no pipe protruding into the final cover.

5. Reseal existing well site with clay cover.

6. Replace topsoil over existing well site and revegetate.

7. Drill and install new well in accordance with construction specifications.

8. Reconnect the LFG lateral to additional lengths of piping needed for the new well.

9. Install wellhead assembly.

10. Install well seal.

11. Install wellhead vault.

12. Replace clay cover around wellhead vault and in areas of trenching or other disturbances.

13. Replace topsoil around wellhead vault and in areas of trenching or other disturbances.

14. Revegetate in accordance with Section 4.0.

5.3.2 Loss of Vacuum at Wellhead

During regular inspection, the LFG pressure is recorded throughout the system. When a loss of vacuum is noted during routine inspections or maintenance, the operator needs to follow a systematic approach to determine the cause of vacuum loss. The following approach is suggested. Site specific conditions may affect this procedure.

1. Determine amount of vacuum loss by comparing current vacuum reading to previously recorded readings.

2. Determine extent of the affected area by measuring vacuum loss throughout the LFG extraction system. If entire field is affected, check the blower station conditions.

3. Check LFG flow rate. If the LFG flow rate is normal, then a leak in the line should be suspected.

4. Check all accessible features in affected part of the LFG extraction system for damage such as holes in the flexible hose, wellhead damage, valve positioning, etc.

5. Check condensate drains for damage.

6. Check liquid levels in condensate collection tanks. A full condensate tank may be causing condensate to back up into the header.

7. Check blower station for damage or motor malfunction.

8. Check monitoring points for oxygen content.

Based on inspection, perform necessary maintenance or repair.

5.3.3 Oxygen in LFG Extraction System

In the case of Doyne Park, low methane levels and high oxygen levels are common and therefore elevated oxygen levels of 5 to 16 percent can occur under normal conditions. Check historical information and review trends.

Air leaks within the LFG extraction system may allow oxygen to enter the system. The most obvious indicator of air leaks will be an excessive amount of oxygen detected during monitoring. Other signs of air leaks are

hissing noises at above ground structures or a large pressure drop over a short distance of LFG header piping (> 1-inch WC pressure drop per 100 feet of pipe). Initially, ball valves on the wells should be adjusted to limit excessive oxygen readings due to large vacuum at the wells. If excessive amounts of oxygen exist after the ball valves have been adjusted, verify the integrity of the LFG extraction system as described and identify air leaks as follows:

1. Turn off the blower.

2. Manually open the valve at the blower station. Close ball valves at the wells.

3. Manually start blower and develop a vacuum of approximately 35 inches WC (static design pressure at the blower).

4. Manually close valve at the blower and turn off the blower, sealing off the header system with a residual negative pressure.

5. Monitor pressure in the header system for a minimum of 5 minutes after the blower is turned off.

    a. If the vacuum remains constant (varies less than 2 percent), commence system startup and balancing activities.

    b. If the vacuum decreases with time, isolate system components by inserting inflatable sewer plugs in the header risers and reapplying vacuum to the system. To install sewer plugs, the header would need to be accessed by excavation using a backhoe and then cutting the header. Locate leaks by starting this procedure and isolating header segments and progressing to the blower. If the header segment is isolated so the blower can still create a vacuum on this segment, then proceed with checking the header segment. If the header is isolated so the header cannot be checked using the blower, then use a conventional low air pressure test or low water pressure test to check for potential leaks. Checking for leaks in the system can be a very time consuming and expensive effort and therefore should be considered as a last resort. Leakage at a closed valve, for example, could be the actual cause if the leak is relatively small. Fused HDPE header does not typically leak. If pressure testing, review drawings for condensate drains so that these drains do not interfere with the pipe testing results. Isolate drains as necessary.

    c. Prior to system startup and balancing activities, make repairs and retest system. Repeat this procedure until the vacuum remains constant (varies less than 2 percent in 5 minutes).

6. Some common areas where air leaks occur are:

    a. Loose gasket at the flange.
    b. Loose clamp at the flexible hose on the wellhead.
    c. Broken sample port.

5.3.4 Power Failure

A power failure will directly impact the LFG extraction system by shutting down the blower which is creating the vacuum. Temporary power outage is not a problem.

5.3.5 Condensate Blockage

If the LFG header system has a large pressure drop in a short distance (> 1-inch WC pressure differential per 100 feet of pipe) and normal amounts of oxygen are measured, this is a potential sign of condensate blocking the flow of LFG in the LFG header. This blockage is most likely due to differential settlement of the landfill and sags occurring in the piping. Blockage of the LFG piping system may go unnoticed for some time if the blockage is near the end of the LFG header system (furthest from the blower station). Careful observation of the pressure drop in segments of the LFG extraction system piping may be required to detect a blockage.

When a condensate blockage is discovered, many times its exact location cannot be determined. For example, a differential pressure in excess of 1-inch WC per 100 feet of piping may be observed between two wells. If the two monitoring points are a great distance apart, then further monitoring work is necessary to pinpoint the blockage location.

When the blockage location is approximated, excavate to access the header, cut the header, and determine if water is present. A sewer video camera may be helpful to see if there is blockage or to see where water is encountered in the header. Multiple excavations to inspect the header will probably be necessary.

The isolated header upstream of the blockage should be operated using the passive vents until the header repair is completed. The header segment downstream of the blockage should be operated using the blower after a sewer plug is installed on the header. Otherwise, operate the entire system using the passive vents until the header repair is completed.

5.4 CONDENSATE EXTRACTION SYSTEM

The main components of the condensate extraction system are the condensate drains, condensate conveyance piping, and condensate collection tanks. Check the liquid level in the condensate tanks and pump the tank out when it reaches 3/4 full. When the tank reaches full, condensate will continue to back up into the header which will restrict or eliminate gas flow and can damage the blower if ice builds up.

5.5 LANDFILL GAS MIGRATION MONITORING SYSTEM

The most typical operating problem with the LFG probes is damage from contact with heavy equipment. Damaged LFG probes must be replaced.

6.0 MONITORING AND TESTING

This section discusses where monitoring and test sampling must be performed on the landfill gas migration control system. This monitoring and inspection plan provides details of the monitoring and sampling requirements.

6.1 LANDFILL COVER SYSTEM

The landfill cover system will not be tested after construction except for potential nutrient testing of the topsoil. The topsoil is readily accessible for sampling at any point on the landfill.

6.2 SURFACE WATER CONTROLS

Surface water control system monitoring and testing is not required.

6.3 LANDFILL GAS EXTRACTION SYSTEM

6.3.1 Introduction

The monitoring requirements for Doyne Park are provided in the December 20, 1996, WDNR letter for conditional approval of the LFG extraction system. Refer to Appendix E for a copy of the WDNR letter. Monitoring requirements are summarized in Table 6-1.

The LFG extraction system is designed to allow regular monitoring of the necessary parameters without interruption of the system. Gas and temperature can be sampled from ports located on the wellheads.

Along the LFG header piping, there are two condensate collection tanks. Condensate samples can be taken at each condensate tank location.

LFG monitoring may include sampling and testing of the raw LFG at the blower if there is a future need to test the gas. At the blower station, a sample port is available for a pressure reading and raw LFG sampling.

LFG extraction system components including piping, valves, and wells will be visually inspected during scheduled monitoring events. Any system damage will be repaired or replaced as soon as practical.

Potential LFG migration will be monitored at probes located at the landfill perimeter. Oxygen, methane, and carbon dioxide will be monitored with a direct reading instrument.

6.3.2 LFG Migration Monitoring

Thirty-four LFG probes will be monitored quarterly during the first year of system operation and semi-annually thereafter. Though WDNR requires only semi-annual monitoring of the gas probes after the first year, Milwaukee County may want to continue quarterly monitoring to provide quality control of the system operation. Parameters to be monitored are provided in Table 6-1. Pressure readings will be taken using a pressure gauge. Oxygen and methane will be measured using an oxygen meter and a combustible gas indicator (CGI), respectively.

TABLE 6-1

LFG MIGRATION CONTROL SYSTEM MONITORING PLAN DOYNE PARK CITY OF MILWAUKEE MILWAUKEE COUNTY, WISCONSIN

Location	Parameters	Frequency
Gas Migration Probes	Oxygen, methane, carbon dioxide	Quarterly for the first year of system operation, semi-annually thereafter
Gas Extraction Wells	Oxygen, methane, carbon dioxide	Quarterly for the first year of system operation, semi-annually thereafter
Header Pipe at the Blower Station	Oxygen, methane, carbon dioxide	Quarterly for the first year of system operation, semi-annually thereafter
Vent Stacks	Oxygen, methane, carbon dioxide	Quarterly for the first year of system operation, semi-annually thereafter
Condensate Collection Tank Nos. 1 and 2	Volume, field pH, field temperature, COD, BOD_5, total suspended solids	Annually

NOTES:

1. At the time of monitoring the gas probes, gas extraction wells, header pipe at the blower station, and the vent stacks, site conditions will be monitored for the following parameters: ambient air temperature, barometric pressure, trends in barometric pressure, ground surface conditions, type of meter used, and latest meter calibration date.

2. Though WDNR requires only semi-annual monitoring of the system after the first year, Milwaukee County may want to continue quarterly monitoring as part of quality control for the system operation. The system operation has been ongoing and the first year of operation has since passed.

6.3.3 LFG Extraction Performance Monitoring

Quarterly measurements will be recorded during operation of the LFG extraction system at LFG extraction wells and monitoring probes to estimate the influence of the collection system. Methane, oxygen, balance gas, and pressure (vacuum) will be monitored at each operating well.

6.3.4 Reporting and Schedule

Quarterly routine reports for the LFG extraction system will include:

- Operation records.
- Performance monitoring data.

After the fourth quarter monitoring and testing is complete, a comprehensive performance report including quarterly monitoring results will be submitted to the WDNR for review. Recommendations for future operation of the LFG extraction system will be made in that report.

6.4 CONDENSATE EXTRACTION SYSTEM

Condensate collected in each of the two collection tanks will be sampled annually for the parameters listed in Table 6-1. A composite sample from the two condensate tanks is allowed for WDNR monitoring. Milwaukee Metropolitan Sewerage District (MMSD) had required condensate monitoring, but has determined there is sufficient analytical information on file already. When discharging condensate to MMSD, contact MMSD so they are aware of the volume (phone No. (414) 225-2157). The original MMSD approval, dated October 20, 1998, for condensate discharge to the sanitary sewer, is provided in Appendix F. Note, MMSD has since informed Milwaukee County that additional chemical testing of the condensate is no longer required by MMSD because sufficient analytical data is already available for Doyne Park and Franklin Landfills.

The condensate discharge location to the sanitary sewer manhole is also provided in Appendix F. The Doyne Park pavilion (clubhouse) and the sanitary sewer manhole are identified on the drawing.

6.5 RECORDKEEPING AND REPORTING PROCEDURES

Monitoring and testing documentation reports will be prepared, summarized, and submitted to the WDNR annually.

7.0 ALTERNATIVE OPERATION

This section addresses alternative operation for the landfill gas migration control system if failure would occur. Maintenance will be a function of manufacturer's recommendations and experience gained by operating the site systems. No alternative maintenance plans are proposed at this time.

7.1 LANDFILL COVER SYSTEM

Landfill cover system failures are not anticipated.

7.2 SURFACE WATER CONTROLS

In the event of a failure, surface water controls would be supplemented by silt fencing and erosion control mats.

7.3 LANDFILL GAS EXTRACTION SYSTEM

In case of mechanical failure of the blower, the system can be converted to passive extraction by opening the vent valves or the system can be sealed by closing the wellhead valves. Closure of the wellhead valves would allow containment of the LFG. If power is disrupted for extended periods of time, a generator can be connected to the LFG extraction system temporarily. In the event the blower is inoperable or requires extensive maintenance, a replacement blower can be used to operate the system.

In case of failure of a LFG header line, the failed line can be isolated and repaired. The portion of the system which would have to be taken out of service is dependent upon the location of the LFG header line failure within the system. LFG will continue to be conveyed by the portion of the LFG header line located between the point of header failure and the blower. Depending on the location of the failed line, all or part of the system could be operated using the passive vents.

7.4 CONDENSATE EXTRACTION SYSTEM

Removal of condensate from the system under normal conditions will be done through the condensate drains located in the LFG header piping system. From the drains, condensate will flow through conveyance pipe to a collection tank. In the event that condensate cannot drain to a collection tank, condensate can be pumped out of the drain through the 8-inch diameter HDPE drain riser pipe. The top of the riser pipe has a flange adaptor with a blind flange.

7.5 LANDFILL GAS MIGRATION MONITORING SYSTEM

The probes are at fixed locations. The only contingency to consider is supplemental soil gas readings due to visible signs of LFG distress (i.e., vegetation stress). This can be done with barhole probes. If the condition persists, a permanent probe can be installed.

8.0 CORRECTIVE ACTIONS FOR SYSTEM FAILURES

This section presents a description of potential corrective actions to be implemented should any portion of the landfill gas migration control system fail.

8.1 LANDFILL COVER SYSTEM

Repair the soil cover if the landfill cover system erodes or settles. No other system failures are anticipated.

8.2 SURFACE WATER CONTROLS

If a ditch becomes blocked, collected surface water may flow around the ditch. After the erosion gullies are repaired and revegetated, this is not a concern.

8.3 LANDFILL GAS EXTRACTION SYSTEM

If a failure, such as a break, occurs in the pipe, the vacuum of the LFG extraction system will prevent some of the LFG from escaping. Repairs will be initiated upon identification and location of the pipe failure.

Corrective actions to address damage or blockage to the LFG header systems are discussed in Section 7.3.

8.4 CONDENSATE EXTRACTION SYSTEM

If a failure, such as a break, occurs in the pipe, the condensate will enter the waste mass. Repair will be initiated upon identification and location of the pipe failure.

8.5 LANDFILL GAS MIGRATION MONITORING SYSTEM

Failure of the LFG probes will be repaired as soon as possible. If repair is not possible, new probes will be installed as appropriate. Failure of a LFG probe typically is the result of physical damage or filling with water.

9.0 SAFETY

This section discusses safety issues related to site operation.

9.1 SAFETY CONSIDERATIONS

During all construction and operation at the site, the Health and Safety Plan (HASP) will be followed.

Rust Environment & Infrastructure, now known as Earth Tech, prepared a document entitled "Site-Specific Health and Safety Plan, Doyne Park, Milwaukee, Wisconsin," dated September 1995. The document is available from Earth Tech and Milwaukee County. This HASP was prepared for the investigation phase of the project and still applies to potential safety hazards at the site. The emergency route to the hospital is noted. Similar emergency medical assistance information is also available at the Doyne Park Club House.

Doyne Park is a public park owned and operated by Milwaukee County Parks Department. Therefore, public use of the facility is expected. Care and caution are required when working on or operating the landfill gas system because of the typical hazards of LFG plus the potential contact with the public and the public's exposure to the work area such as open manholes or related potential hazards.

9.1.1 Potential Safety Hazards

The HASP contains a detailed discussion of the potential safety hazards at the site. The HASP should be reviewed for operation, maintenance or repair activities.

9.2 SAFETY PRECAUTIONS

9.2.1 Gas Monitoring

The following safety precautions should be adhered to by personnel when monitoring for combustible gas:

- All personnel involved in monitoring on site must be trained in the hazards of LFG.
- Hard hats and glasses must be worn at all times.
- Absolutely no smoking at any time when monitoring the landfill gas migration control system.
- A fire extinguisher must be readily available when monitoring gas concentrations within structures and/or confined spaces.
- Adhere to the monitoring requirements of the HASP.

9.2.2 General Safety Practices

The following listed procedures will be implemented to reduce the potential for emergency situations.

- All employees at the site will be trained in proper procedures for reporting accidents, injuries, and fires.
- Fire extinguishers will be provided in all site buildings and in all vehicles used on site. Each extinguisher will be appropriate for the types of fires likely to occur and will be checked or serviced as appropriate. Discharged fire extinguishers will be removed and replaced with fully charged units.

- All employees will be trained to identify hazards at the site. Potential hazards will be reported to the supervisor.

- NO SMOKING shall be enforced for work involving the LFG migration control system.

9.3 EMPLOYEES RESPONSIBILITY FOR SAFETY

Before beginning a job, the employee should satisfy himself/herself that the task can be performed without undue risk of injury. If the employee is in doubt as to his/her ability to perform the work or the precautions to be taken, the employee should call this to the attention of his/her supervisor.

9.3.1 Contingency Planning

Before commencing any work that may be hazardous, care should be taken to establish a safe procedure. Where more than one employee is engaged in the same job, all employees concerned should understand the procedures to be followed. Under no circumstances should safety be sacrificed for speed.

9.3.2 Intoxicating Beverages and Drugs

Use or possession of intoxicating beverages or drugs on facility premises, on the job, or during working hours is prohibited and may result in disciplinary action. Any employee taking drugs prescribed by a physician or over-the-counter drugs which could impair the employee's assigned work should report this fact to his/her supervisor.

9.4 VISITORS

- Visitors will be escorted at all times when in contact with the LFG system equipment. The blower system is fenced so the public is restricted from this area.

- Visitors will be cautioned not to touch anything, especially controls and rotating electrical and mechanical equipment. Safe distance will be maintained from all site equipment.

- All visitors will be required to wear hard hats and safety eyeglasses when in contact with the LFG system equipment.

- Visitors will be prohibited from hazardous, confined areas.

- Vendor representatives visiting the site will be advised of any existing, but unidentified, hazards that would affect their work.

9.5 EMERGENCIES

9.5.1 Accidental Spills

In the event of an accidental spill on-site, the following procedures will be implemented:

- Determine location, extent, type, and, if possible, cause of release (e.g., leachate, gas condensate, contaminated storm water, fuel spill, etc.).

- Inspect the spill area to identify the type of spill, assess the probability of environmental damage, and implement safety and emergency response procedures.
- Report the spill to the site manager in accordance with Section 10.0, Reporting.
- Take action necessary to mitigate possible environmental damage.

9.5.2 Fires/Explosion

In the event of a fire or explosion, contact the local fire department and implement the following procedures:

- Extinguish small fires using the appropriate extinguishers and/or on-site soils.
- Notify on-site personnel and implement safety and fire control procedures.

In the event of a fire, the LFG extraction system will be shutdown to limit intrusion of oxygen. The extent of the suspected oxidation area will be noted by the inspector based on surface evidence. The inspector will notify on-site personnel and site representative. Intrusive measures will be started in a controlled manner and may include:

- Saturating the cover soil or adding cover soil to restrict air infiltration.
- Excavate and extinguish with appropriate materials.

9.5.3 Severe Weather

- Proceed to the nearest, safest shelter area.
- Following severe weather, perform a site survey to determine if any damage or unsafe/hazardous working conditions exist and the location and nature of the damage or hazardous condition.

9.5.4 Emergency Procedures

Emergency procedures will be posted as necessary, in locations accessible to all employees. Emergency information includes:

- The name, location, and telephone number of medical treatment facilities and ambulance service, fire department, and local law enforcement authority.

Instructions on Procedures - New personnel will be instructed on emergency procedures used at the site.

Responsibility of Employee - It is the responsibility of every employee to know and remember his/her role in each emergency procedure at the site.

9.6 SAFETY EQUIPMENT

All personnel shall wear appropriate attire and protective equipment, such as hardhats, safety glasses, and safety shoes whenever working on the landfill gas migration control system. Specific safety equipment required for any building or area of the site will be posted with their equipment. Employees shall refer to the HASP for information on appropriate equipment selection.

9.7 FIRST AID

9.7.1 Personnel Accidents

Administer first aid as necessary for on-site personnel accidents or injuries. Follow normal first aid steps for assessing conditions and notify emergency response personnel if appropriate. Report all on-site accidents involving injuries in accordance with Section 10.0, Reporting. The location of the nearest medical facility and route to the facility will be provided in the HASP.

10.0 REPORTING

In accordance with the WDNR Conditions of Approval, Milwaukee County shall provide the WDNR with annual progress reports. Reports shall indicate the progress of monitoring, operation, and maintenance of the landfill gas migration control system at Doyne Park. Monitoring shall be done quarterly during the first year of operation and semi-annually thereafter. An annual report will be prepared to summarize monitoring and O&M activities. Milwaukee County may want to continue quarterly monitoring of the gas system after the first year to verify proper operation of the LFG system.

This section describes the types of reports which will be prepared. In addition, standard forms are provided. As discussed in earlier sections of this manual, some of the systems will be placed into operation immediately following installation (i.e., cover maintenance). Therefore, the reporting is considered to change from quarterly to semi-annually after the first year of operation.

Several miscellaneous reports are discussed in this section and will simply be attachments to the annual report. These reports include laboratory test results, landfill gas well inspections, LFG probe monitoring results, accidental spills, and other incidences.

10.1 QUARTERLY MONITORING

The purpose of quarterly monitoring is to present the results of the sampling and analysis of landfill gas during operation. Quarterly information will also indicate the progress of monitoring activities. The second, third, and fourth quarter reports will be combined and submitted at the end of the first year of operation. Annual reports will be prepared after the first year of system operation.

10.2 ANNUAL REPORTS

The annual report will provide a summary of effectiveness of the landfill gas migration control system. Data on system operation, operating problems, maintenance activities, and monitoring data will be supplied. This report will provide the formal transmittal of laboratory test data or field measurements to the agencies. Each report will include an assessment of the effectiveness of the systems in achieving the requirements and proposed operational changes, if required. In general, the report shall contain the following:

1. Summary of operational conditions, maintenance performed, and repairs required on the landfill gas migration control system, including:

    a. Landfill cover system.
    b. Surface water control.
    c. LFG extraction system.
    d. Condensate extraction system.
    e. LFG migration monitoring system.

2. Maintenance procedures implemented in reporting period will be summarized. Any required changes to maintenance frequency will be discussed.

3. Repairs implemented outside of the scope of normal maintenance will be reported.

4. Summary of effectiveness of the landfill gas migration control system.

5. Appendices will be attached to the annual report when necessary. The appendices generally will include:

a. Laboratory test data.
b. Field measurement information.
c. Maintenance as applicable.

These reports are discussed in subsequent sections of this manual. Typical report and inspection logs are included at the end of Section 10.0.

10.3 MISCELLANEOUS INFORMATION

During the operation of the landfill gas migration control system, miscellaneous information may be provided. These documents will be attached to the annual reports. This section discusses the format and requirements for typical miscellaneous information.

10.3.1 Laboratory Test Results

Laboratory test results from the condensate sampled will be prepared in accordance with the approved monitoring plan.

10.3.2 Landfill Gas Well Inspection

The LFG extraction wells will be inspected on a quarterly basis for integrity. This will be done as part of the quarterly monitoring report. LFG quality will be recorded in accordance with the monitoring plan.

10.3.3 LFG Probe Monitoring

The LFG probes will be monitored quarterly during the first year of the system operation and semi-annually thereafter. The County may want to continue quarterly monitoring as part of system operation and quality control. A form similar to the one attached to this section will be used to record the data.

10.3.4 Accidental Spills

Accidental spills of leachate, gas condensate, or any other potentially harmful or hazardous substance will be immediately reported and recorded in the daily log. The report and log entry should include:

- Time/date of incident or its discovery.
- Type of release and effects.
- Source.
- Response and effectiveness.
- Agencies contacted.
- Corrective actions planned and scheduled.

A list of persons/agencies to contact in the event of a spill should be kept in an easily accessible location.

10.3.5 Incident Report

An incident report form will be filled out for miscellaneous occurrences on-site that impact operations. These may include fires, equipment breakage/damage, accidents/injuries; and weather-induced damage. This form will include the following information:

- Date/time of incident.

- Type of occurrence.
- Personnel reporting.
- Personnel involved.
- Equipment involved.
- Summary of actions.

10.4 SAMPLE FORMS

The following pages provide example forms which are proposed for reporting and inspections. Additional forms or alternations may be required to meet the needs of the site after the systems are in operation.

GAS WELL MONITORING REPORT
LANDFILL GAS MIGRATION CONTROL SYSTEM
DOYNE PARK
CITY OF MILWAUKEE
MILWAUKEE COUNTY, WISCONSIN

Combustible Gas Instrument Type:	Serial No.:
Date Last Calibrated:	
Sampling Device: Aspirator Bulb/Electric Pump (Circle One)	
Oxygen Instrument Type:	Serial No.:
Date Last Calibrated:	

Well No.	Time	Percent Methane	Percent Oxygen	Valve Position (% Open)	Well* Pressure (+/-) (In. W.C.)	Header Available Vacuum (In. W.C.)	Well Temp. (°F)	Comments
*Taken from a sample port on 8-inch well head flange								

Date: _____

Completed By: _____

L:\WORK\40626\ADMIN\O&M1\LANDGCSM.DOC

WELL FIELD MAINTENANCE LOG
LANDFILL GAS MIGRATION CONTROL SYSTEM
DOYNE PARK
CITY OF MILWAUKEE
MILWAUKEE COUNTY, WISCONSIN

Date:			
Completed by:			
Well No.:			
Location:			
Well (Check, as appropriate)			
Sample Ports		Wellhead Vault	
Flexible Hose		Lateral	
Ball Valve		Well Casing	
Headers (Check, as appropriate)			
Air Leak		Road Crossing	
Condensate Blockage		Header Riser	
Crushed Pipe		Cleanout Tee	
MAINTENANCE (Describe Activities)			
Wells			
Header			

PERMANENT PROBE GAS MONITORING REPORT
LANDFILL GAS MIGRATION CONTROL SYSTEM
DOYNE PARK
CITY OF MILWAUKEE
MILWAUKEE COUNTY, WISCONSIN

Combustible Gas Instrument Type: _____ Serial No.: _____

Date Last Calibrated: _____ Method: _____

Pressure Instrument Type: _____ Serial No.: _____

Water Level Instrument Type: _____ Serial No.: _____

Weather Conditions: _____ Barometric Pressure: _____

Monitor Point	Time	Pressure In. W.C. (+/-)	Percent Methane	Comments

Note: All readings are 0-100% methane by volume in air.
All pressure readings are expressed as inches of H_2O.

DATE: _____

COMPLETED BY: _____

BLOWER STATION MAINTENANCE LOG
LANDFILL GAS MIGRATION CONTROL SYSTEM
DOYNE PARK
CITY OF MILWAUKEE
MILWAUKEE COUNTY, WISCONSIN

Date:

Completed By:

Blower (Check, as appropriate)

Motor Starter		Pipe Supports		Coupling	
Lubrication		Fence		Motor	
Sample Ports		Road Repair		Paint	
Valve Actuator				Shaft Seal	
Pipe Repair				Shaft guard	

MAINTENANCE (Describe Activities)

Blower

BLOWER STATION MONITORING REPORT
LANDFILL GAS MIGRATION CONTROL SYSTEM
DOYNE PARK

Barometric Pressure:

Weather:

Gas Instrument Type:

Blower Amperage:

Location	Pressure +/- (In. W.C.)	Percent Methane	Percent Oxygen	Gas Temp. (°F)	
Blower Inlet					

Comments:

Date of Monitoring:

By:

L:\WORK\40626\ADMIN\O&M1\FLARESMR.DOC

INSPECTION LOG
LANDFILL GAS MIGRATION CONTROL SYSTEM
DOYNE PARK
CITY OF MILWAUKEE
MILWAUKEE COUNTY, WISCONSIN

Date: _____

Inspector: _____

Gas System Component	Observation		Comment/Action
	Yes	No	
Wells/Header System			
Well heads intact/valves operating			
Condensate drains			
Gas monitoring data obtained			
Warning signs placed/intact			
Vegetative stress observed			
Final cover integrity verified			
Temperature gauge			
Condensate Collection System			
Condensate drains			
Condensate collection tanks			
Controls intact			
Blower Station			
Blower rotation performed			
Blower unit bearing checked			
Control panel status lights 'ok'			
Actuated valve operating			
Fence secure/locks installed			
General Comments:			

APPENDIX A

DRAWINGS

CONSTRUCTION DOCUMENTATION DRAWINGS

LANDFILL GAS MIGRATION CONTROL SYSTEM
DOYNE PARK
CITY OF MILWAUKEE
MILWAUKEE COUNTY, WISCONSIN

JULY 1999

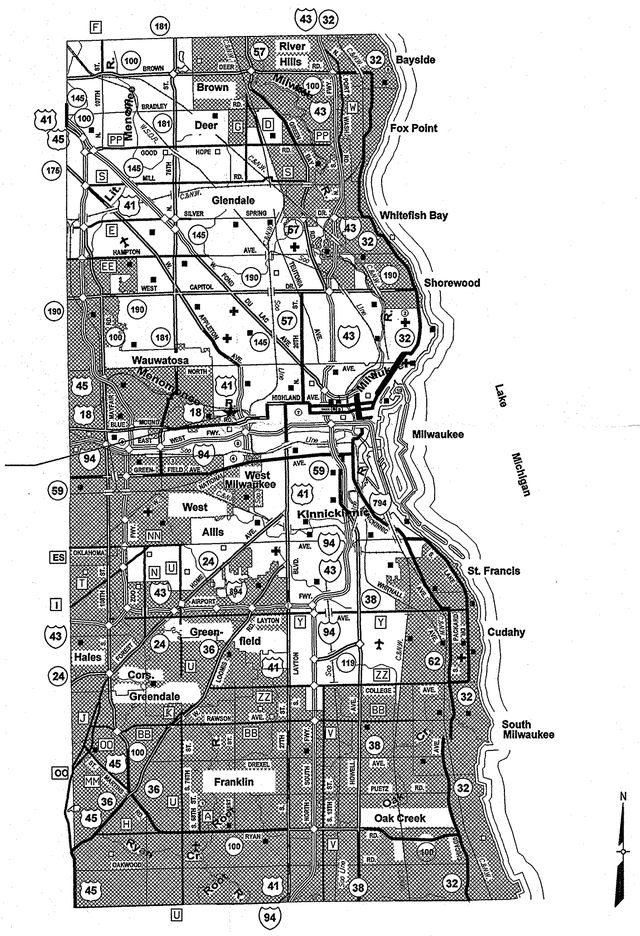

LOCATION MAP

APPROX. SCALE
1"=2 MILES

INDEX

DRAWING NO.	TITLE	FILE NO.
1	TITLE AND INDEX	A-69870
2	OVERALL LAYOUT	A-69869
3	WEST PLAN	A-69868
4	EAST PLAN	A-69867
5	COVER RESTORATION PLAN	A-69866
6	DETAILS	A-69865
7	DETAILS	A-69864
8	ELECTRICAL DETAILS	A-69863
9	CONDENSATE TANK AND DRAIN DETAILS	A-69863A

WISCONSIN
DONALD F. FIRRUING
E-16736
SHEBOYGAN, WI
7-30-99
PROFESSIONAL ENGINEER

EARTH TECH

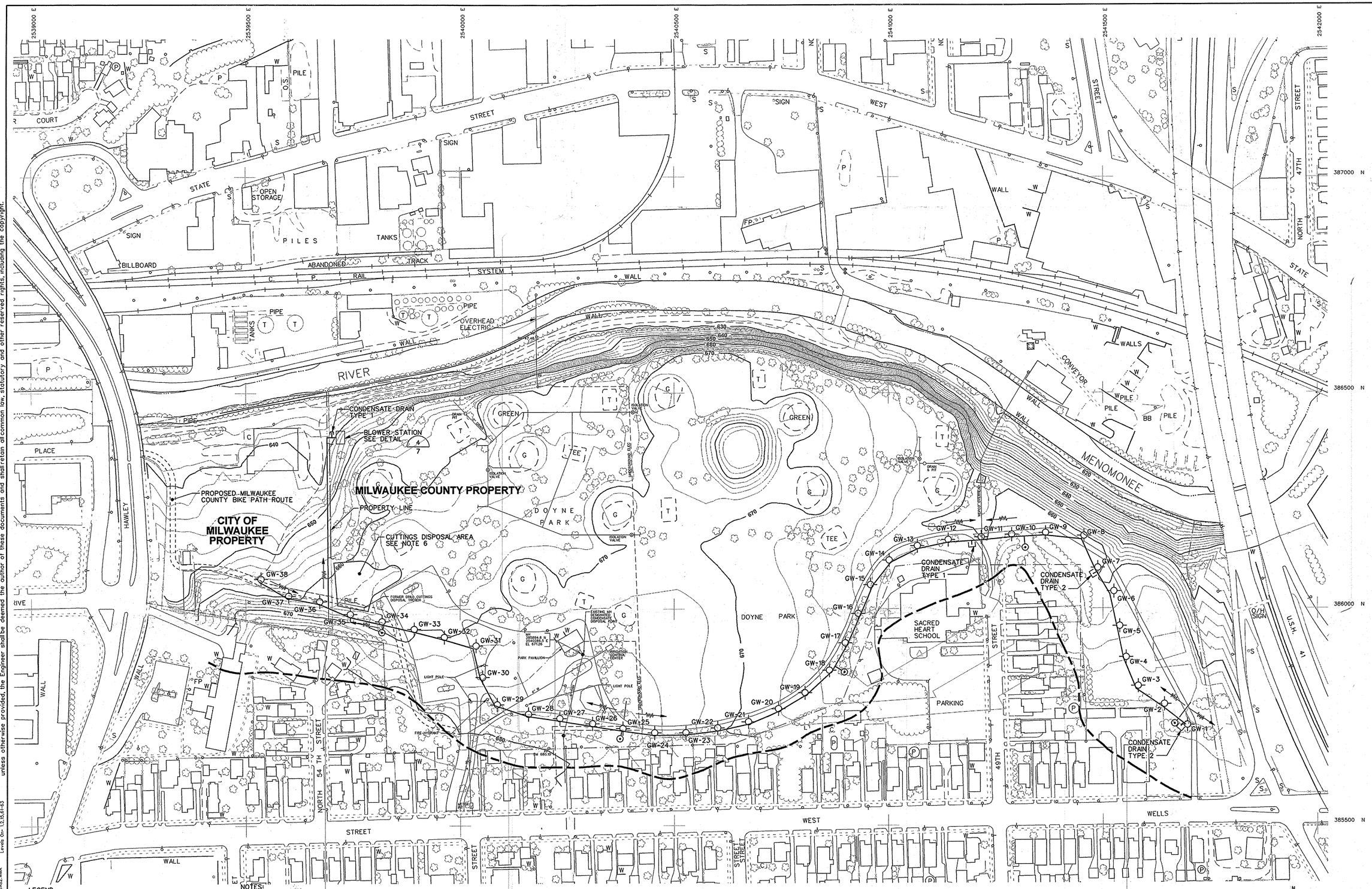

LEGEND

- GW-1 — GAS WELL
- PROBABLE LIMITS OF FILL
- APPROXIMATE PROPERTY LINE
- CONDENSATE DRAIN
- 8" GAS HEADER PIPE
- GAS VENT
- CONDENSATE FLOW

NOTES:

1. BASE MAP PROVIDED BY MILWAUKEE COUNTY. MAPPING PREPARED FOR SOUTHEASTERN WISCONSIN REGIONAL PLANNING COMMISSION BY AERO-METRIC ENGINEERING. DATE OF PHOTOGRAPHY: 3-22-85. COMPILED TO NATIONAL MAP ACCURACY STANDARDS UTILIZING STEREO-PHOTO-GRAMMETRIC METHODS.
2. HORIZONTAL GRID IS BASED ON THE WISCONSIN STATE PLANE COORDINATE SYSTEM.
3. VERTICAL DATUM IS NATIONAL GEODETIC VERTICAL DATUM (NGVD) OF 1929, CITY OF MILWAUKEE (LOCAL BENCHMARK) DATUM =580.60=NGVD.
4. APPROXIMATE PROPERTY LINE BASED ON MILWAUKEE COUNTY PARK COMMISSSION DRAWING TITLED "GENERAL DEVELOPMENT PLAN, DOYNE PARK, PARK SITE 61" DATED 9-76.
5. LOCATION OF EXISTING UTILITIES IS BASED ON MILWAUKEE COUNTY DEPARTMENT OF PUBLIC WORKS DRAWING TITLED "DOYNE PARK IRRIGATION SYSTEM BLOCK VALUE PLAN AND LOCATION", DATED JUNE, 1980. ONLY THOSE PORTIONS OF EXISTING UTILITIES WHICH CROSS OR ARE NEAR WORK AREAS AFFECTED BY THIS CONTRACT ARE SHOWN.
6. EXISTING COVER SOIL WAS REMOVED PRIOR TO DISPOSAL AND COMPACTION OF WASTE FROM TRENCH AND WELL CONSTRUCTION. FINAL COVER WAS REPLACED, GRADED TO DRAIN, RESTORED WITH 6" TOPSOIL. SEED, FERTILIZE AND MULCH.
7. MINOR CHANGES IN HORIZONTAL AND VERTICAL GRADE OF HDPE PIPE WERE REQUIRED TO MINIMIZE DAMAGE TO MATURE TREES AND TO THE PARK WALKWAY.
8. THE DOYNE PARK LANDFILL GAS MIGRATION CONTROL SYSTEM WAS CONSTRUCTED IN GENERAL ACCORDANCE WITH CONSTRUCTION DOCUMENTS.

This drawing, specifications and other documents prepared by the Engineer for this project are instruments of the Engineer's service for use solely with respect to this project and, unless otherwise provided, the Engineer shall be deemed the author of these documents and shall retain all common law, statutory and other reserved rights, including the copyright.

NO.	REVISIONS	MADE	CHK	DATE

NAMES	DATE
DRAWN:	
DESIGN:	
CHECKED:	
PE:	
APP'D:	
APP'D:	
APP'D:	

EARTH TECH

DOYNE PARK
CITY OF MILWAUKEE
MILWAUKEE COUNTY, WISCONSIN
LANDFILL GAS MIGRATION CONTROL SYSTEM

OVERALL LAYOUT

DATE

SHEET NO.

FILE NO. A-69869

PROJECT No.

CLIENT DRAWING NO.

2
EARTH TECH DRAWING NO.

LEGEND

GW-1	GAS WELL
	PROBABLE LIMITS OF FILL
	APPROXIMATE PROPERTY LINE
	CONDENSATE DRAIN
	8" GAS HEADER PIPE
	GAS VENT
	CONDENSATE FLOW

NOTES:

1. BASE MAP PROVIDED BY MILWAUKEE COUNTY. MAPPING PREPARED FOR SOUTHEASTERN WISCONSIN REGIONAL PLANNING COMMISSION BY AERO-METRIC ENGINEERING. DATE OF PHOTOGRAPHY: 3-22-85. COMPILED TO NATIONAL MAP ACCURACY STANDARDS UTILIZING STEREO-PHOTO-GRAMMETRIC METHODS.
2. HORIZONTAL GRID IS BASED ON THE WISCONSIN STATE PLANE COORDINATE SYSTEM.
3. VERTICAL DATUM IS NATIONAL GEODETIC VERTICAL DATUM (NGVD) OF 1929, CITY OF MILWAUKEE (LOCAL BENCHMARK) DATUM +580.60=NGVD.
4. APPROXIMATE PROPERTY LINE BASED ON MILWAUKEE COUNTY PARK COMMISSSION DRAWING TITLED "GENERAL DEVELOPMENT PLAN, DOYNE PARK, PARK SITE 61" DATED 9-76.
5. LOCATION OF EXISTING UTILITIES IS BASED ON MILWAUKEE COUNTY DEPARTMENT OF PUBLIC WORKS DRAWING TITLED "DOYNE PARK IRRIGATION SYSTEM BLOCK VALUE PLAN AND LOCATION", DATED JUNE, 1980. ONLY THOSE PORTIONS OF EXISTING UTILITIES WHICH CROSS OR ARE NEAR WORK AREAS AFFECTED BY THIS CONTRACT ARE SHOWN.
6. EXISTING COVER SOIL WAS REMOVED PRIOR TO DISPOSAL AND COMPACTION OF WASTE FROM TRENCH AND WELL CONSTRUCTION. FINAL COVER WAS REPLACED, GRADED TO DRAIN, RESTORED WITH 6" TOPSOIL. SEED, FERTILIZE AND MULCH.
7. MINOR CHANGES IN HORIZONTAL AND VERTICAL GRADE OF HDPE PIPE WERE REQUIRED TO MINIMIZE DAMAGE TO MATURE TREES AND TO THE PARK WALKWAY.
8. THE DOYNE PARK LANDFILL GAS MIGRATION CONTROL SYSTEM WAS CONSTRUCTED IN GENERAL ACCORDANCE WITH CONSTRUCTION DOCUMENTS.

NO.	REVISIONS	MADE	CHK	DATE

NAMES — DATE
DRAWN:
DESIGN:
CHECKED:
PE:
APP'D:
APP'D:
APP'D:

EARTH TECH

DOYNE PARK
CITY OF MILWAUKEE
MILWAUKEE COUNTY, WISCONSIN
LANDFILL GAS MIGRATION CONTROL SYSTEM

WEST PLAN

DATE
SHEET NO.
FILE NO. A-69868
PROJECT No.
CLIENT DRAWING NO.
3
EARTH TECH DRAWING NO.

These drawings, specifications and other documents prepared by the Engineer for this project are instruments of the Engineer's service for use solely with respect to this project and, unless otherwise provided, the Engineer shall be deemed the author of these documents and shall retain all common law, statutory and other reserved rights, including the copyright.

USER PENTABLE=\\abs02\data\plot\tbl\mswaste.tbl
PLOT Fri Dec 29 09:22:09 2000
PRF =\\abs02\data\work\doyne02\cadd\prf\gasw.prf
DATE =Thu Dec 28 09:22:09 2000
DGN =\\abs02\data\work\doyne02\cadd\GASW.wmo

RF1 = \\abs02\data\work\doyne02\cadd\72lne26.sym
Levels On= 1-4,6-63
RF2 = \\abs02\data\work\doyne02\cadd\72lnw26.sym
Levels On= 1-63
RF3 = \\abs02\data\work\doyne02\cadd\72lnv26.sym
Levels On= 12,13,61-63

RF4 = \\abs02\data\work\doyne02\cadd\tgps2.plt
Levels On= 3,20,30
RF5 = \\abs02\data\work\doyne02\cadd\DESIGNLOGN
Levels On= 1-63

DGN

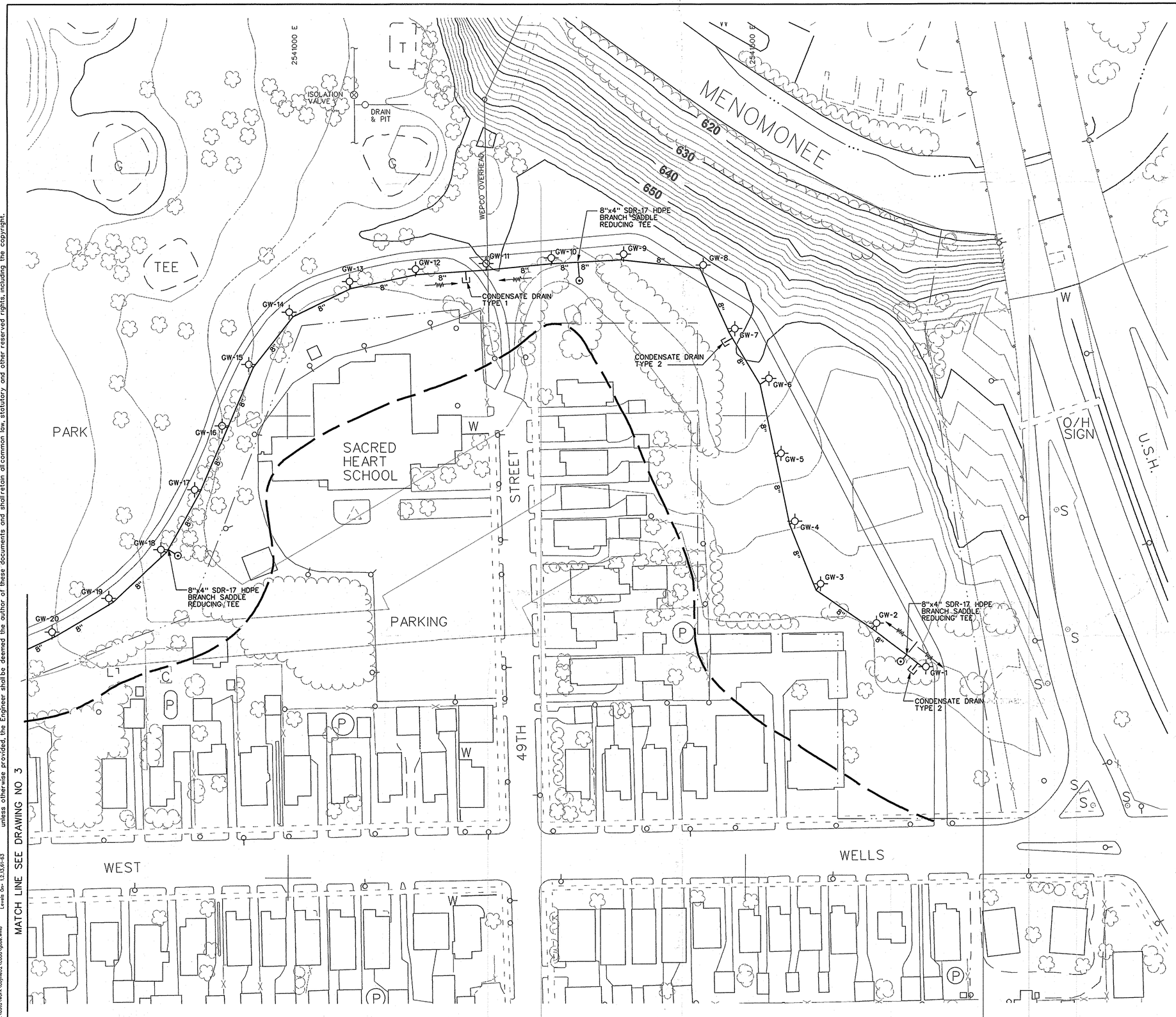

LEGEND

GW-1	GAS WELL
	PROBABLE LIMITS OF FILL
	APPROXIMATE PROPERTY LINE
	CONDENSATE DRAIN
	8" GAS HEADER PIPE
	GAS VENT
	CONDENSATE FLOW

NOTES:

1. BASE MAP PROVIDED BY MILWAUKEE COUNTY. MAPPING PREPARED FOR SOUTHEASTERN WISCONSIN REGIONAL PLANNING COMMISSION BY AERO-METRIC ENGINEERING. DATE OF PHOTOGRAPHY: 3-22-85. COMPILED TO NATIONAL MAP ACCURACY STANDARDS UTILIZING STEREO-PHOTO-GRAMMETRIC METHODS.
2. HORIZONTAL GRID IS BASED ON THE WISCONSIN STATE PLANE COORDINATE SYSTEM.
3. VERTICAL DATUM IS NATIONAL GEODETIC VERTICAL DATUM (NGVD) OF 1929, CITY OF MILWAUKEE (LOCAL BENCHMARK) DATUM =580.60=NGVD.
4. APPROXIMATE PROPERTY LINE BASED ON MILWAUKEE COUNTY PARK COMMISSSION DRAWING TITLED "GENERAL DEVELOPMENT PLAN, DOYNE PARK, PARK SITE 61" DATED 9-76.
5. LOCATION OF EXISTING UTILITIES IS BASED ON MILWAUKEE COUNTY DEPARTMENT OF PUBLIC WORKS DRAWING TITLED "DOYNE PARK IRRIGATION SYSTEM BLOCK VALUE PLAN AND LOCATION", DATED JUNE, 1980. ONLY THOSE PORTIONS OF EXISTING UTILITIES WHICH CROSS OR ARE NEAR WORK AREAS AFFECTED BY THIS CONTRACT ARE SHOWN.
6. EXISTING COVER SOIL WAS REMOVED PRIOR TO DISPOSAL AND COMPACTION OF WASTE FROM TRENCH AND WELL CONSTRUCTION. FINAL COVER WAS REPLACED, GRADED TO DRAIN, RESTORED WITH 6" TOPSOIL. SEED, FERTILIZE AND MULCH.
7. MINOR CHANGES IN HORIZONTAL AND VERTICAL GRADE OF HDPE PIPE WERE REQUIRED TO MINIMIZE DAMAGE TO MATURE TREES AND TO THE PARK WALKWAY.
8. THE DOYNE PARK LANDFILL GAS MIGRATION CONTROL SYSTEM WAS CONSTRUCTED IN GENERAL ACCORDANCE WITH CONSTRUCTION DOCUMENTS.

SCALE 0' 25' 50' 100'

NO.	REVISIONS	MADE	CHK	DATE

NAMES	DATE
DRAWN:	
DESIGN:	
CHECKED:	
PE:	
APP'D:	
APP'D:	
APP'D:	

EARTH TECH

DOYNE PARK
CITY OF MILWAUKEE
MILWAUKEE COUNTY, WISCONSIN
LANDFILL GAS MIGRATION CONTROL SYSTEM

EAST PLAN

DATE

SHEET NO.

FILE NO. A-69867

PROJECT No.

CLIENT DRAWING NO.

4

EARTH TECH DRAWING NO.

This project are instruments of the Engineer's service for use solely with respect to this project and, documents and shall retain all common law, statutory and other reserved rights, including the copyright.

USER
PENTABLE=\\atbsb02\data\plot\tbl\mmwaste.tbl
Levels On= 1-3,6,7,9-30,33-50,52
PAGE = \\atbsb02\data\work\doyne02\cadd\pr\gpsa.prf
DATE - Thu Dec 28 08:21:56 2000
DGN =\\atbsb02\data\work\doyne02\cadd\gas.wmo

RF1 = \\atbsb02\data\work\doyne02\cadd\72inw26.sym
Levels On= 1-4,61-63
RF2 = \\atbsb02\data\work\doyne02\cadd\72inw26.sym
Levels On= 1-4,61-63
RF3 = \\atbsb02\data\work\doyne02\cadd\72inw26.sym
Levels On= 1,2,13,61-63

RF4 = \\atbsb02\data\work\doyne02\cadd\DESIGN.DGN
Levels On= 1-8
RF5 = \\atbsb02\data\work\doyne02\cadd\topo2.plt
Levels On= 1-20,23-29

DGN

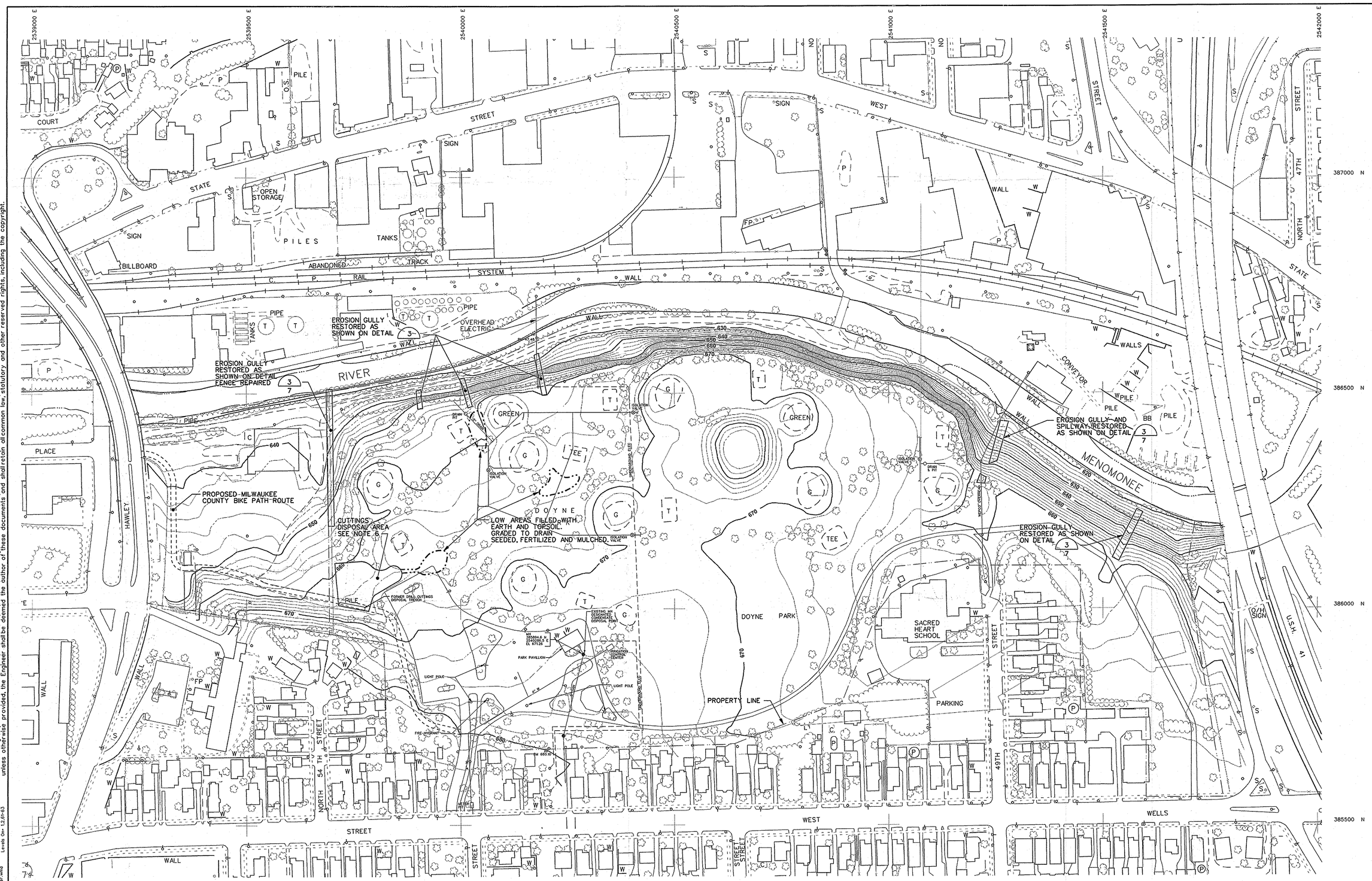

NOTES:

1. BASE MAP PROVIDED BY MILWAUKEE COUNTY. MAPPING PREPARED FOR SOUTHEASTERN WISCONSIN REGIONAL PLANNING COMMISSION BY AERO-METRIC ENGINEERING. DATE OF PHOTOGRAPHY: 3-22-85. COMPILED TO NATIONAL MAP ACCURACY STANDARDS UTILIZING STEREO-PHOTO-GRAMMETRIC METHODS.
2. HORIZONTAL GRID IS BASED ON THE WISCONSIN STATE PLANE COORDINATE SYSTEM.
3. VERTICAL DATUM IS NATIONAL GEODETIC VERTICAL DATUM (NGVD) OF 1929, CITY OF MILWAUKEE (LOCAL BENCHMARK) DATUM +580.60=NGVD.
4. APPROXIMATE PROPERTY LINE BASED ON MILWAUKEE COUNTY PARK COMMISSSION DRAWING TITLED "GENERAL DEVELOPMENT PLAN, DOYNE PARK, PARK SITE 61" DATED 9-76.
5. LOCATION OF EXISTING UTILITIES IS BASED ON MILWAUKEE COUNTY DEPARTMENT OF PUBLIC WORKS DRAWING TITLED "DOYNE PARK IRRIGATION SYSTEM BLOCK VALUE PLAN AND LOCATION", DATED JUNE, 1980. ONLY THOSE PORTIONS OF EXISTING UTILITIES WHICH CROSS OR ARE NEAR WORK AREAS AFFECTED BY THIS CONTRACT ARE SHOWN.
6. EXISTING COVER SOIL WAS REMOVED PRIOR TO DISPOSAL AND COMPACTION OF WASTE FROM TRENCH AND WELL CONSTRUCTION. FINAL COVER WAS REPLACED, GRADED TO DRAIN RESTORED WITH 6" TOPSOIL. SEED, FERTILIZE AND MULCH.
7. MINOR CHANGES IN HORIZONTAL AND VERTICAL GRADE OF HDPE PIPE WERE REQUIRED TO MINIMIZE DAMAGE TO MATURE TREES AND TO THE PARK WALKWAY.
8. THE DOYNE PARK LANDFILL GAS MIGRATION CONTROL SYSTEM WAS CONSTRUCTED IN GENERAL ACCORDANCE WITH CONSTRUCTION DOCUMENTS.

N

SCALE 0' 50' 100' 200'

NO.	REVISIONS	MADE	CHK	DATE

NAMES	DATE
DRAWN:	
DESIGN:	
CHECKED:	
PE:	
APP'D:	
APP'D:	
APP'D:	

EARTH TECH

DOYNE PARK
CITY OF MILWAUKEE
MILWAUKEE COUNTY, WISCONSIN
LANDFILL GAS MIGRATION CONTROL SYSTEM

COVER RESTORATION PLAN

DATE
SHEET NO.
FILE NO. A-69866
PROJECT No.
CLIENT DRAWING NO.
5
EARTH TECH DRAWING NO.

This drawing, specifications and other documents prepared by the Engineer for this project are instruments of the Engineer's service for use solely with respect to this project and, unless otherwise provided, the Engineer shall be deemed the author of these documents and shall retain all common law, statutory and other reserved rights, including the copyright.

DGN

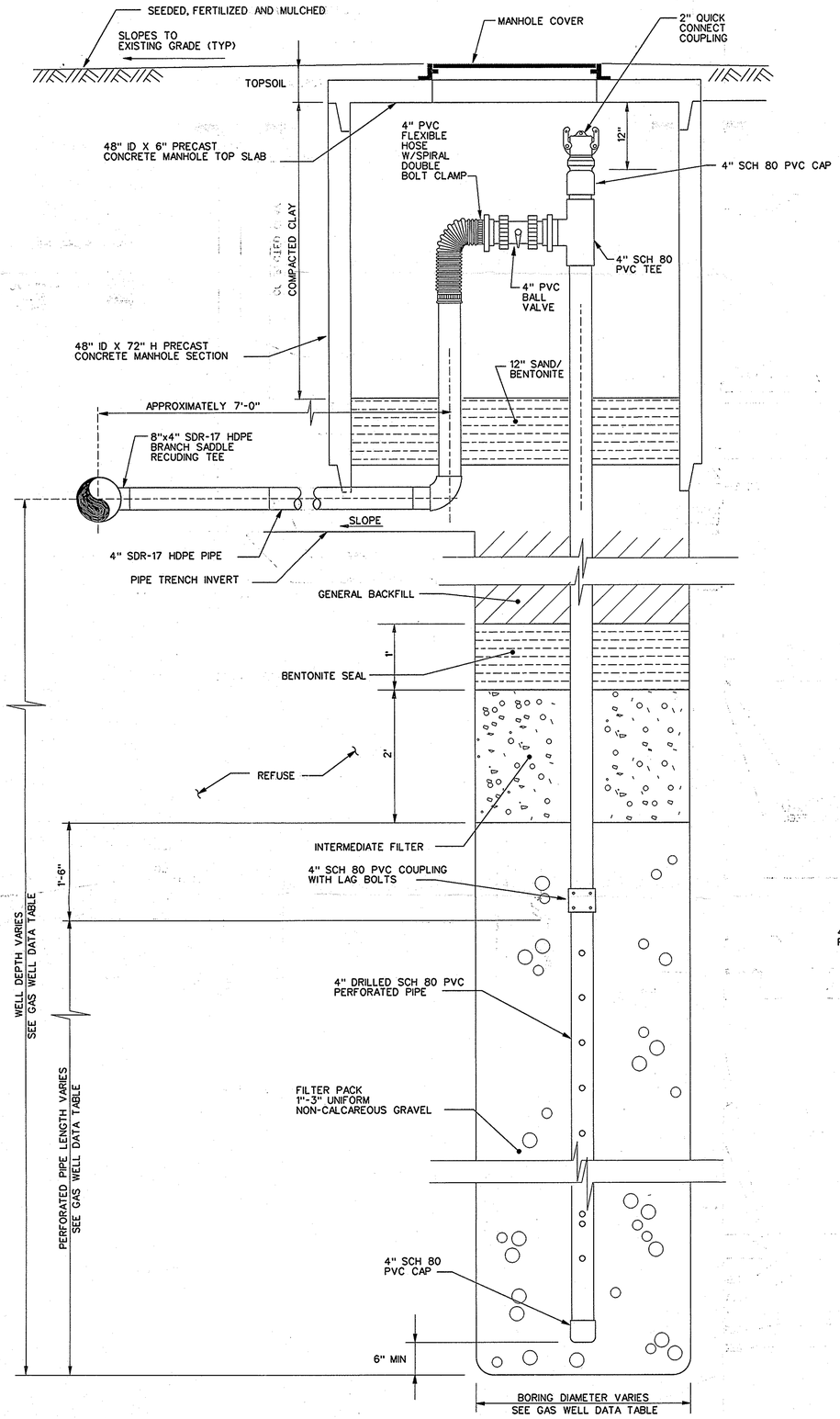

GAS WELL 1/6
NTS

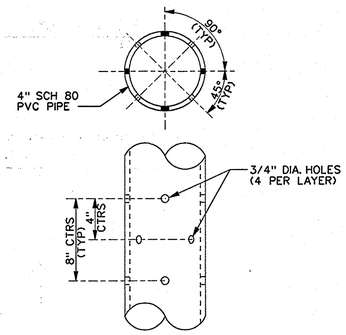

PERFORATED PIPE SECTION

NOTES:

1. GENERAL BACKFILL DRILL OR TRENCH CUTTINGS.
2. GAS WELL DATA TABLE IN DOCUMENTATION REPORT.

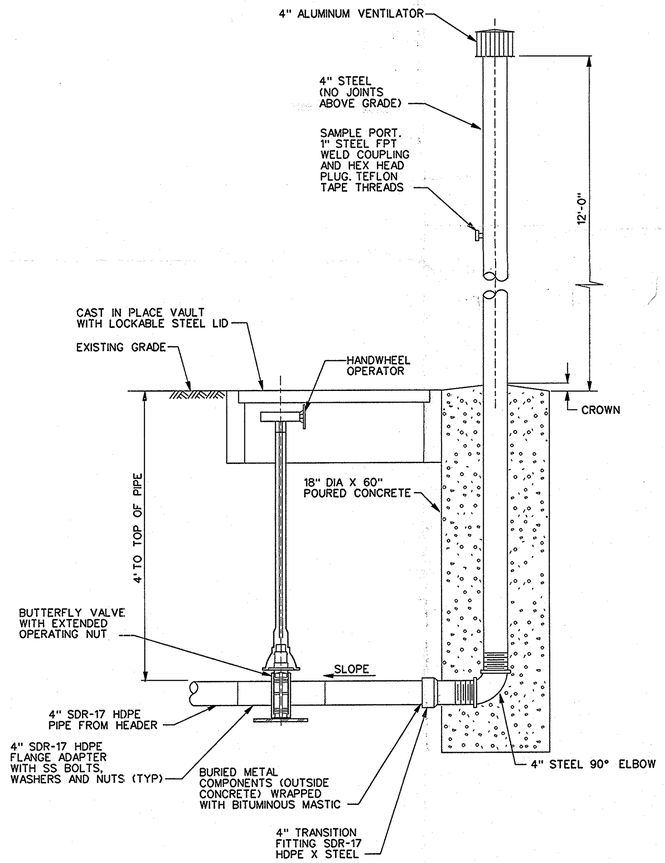

VENT STACK 2/6
NTS

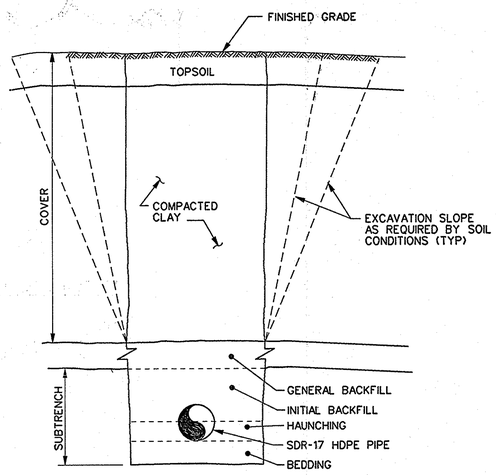

PIPE TRENCH 3/6
NTS

NO.	REVISIONS	MADE	CHK	DATE

NAMES | DATE
DRAWN:
DESIGN:
CHECKED:
PE:
APP'D:
APP'D:
APP'D:

EARTH TECH

DOYNE PARK
CITY OF MILWAUKEE
MILWAUKEE COUNTY, WISCONSIN
LANDFILL GAS MIGRATION CONTROL SYSTEM

DETAILS

DATE
SHEET NO.
FILE NO. A-69865
PROJECT No.
CLIENT DRAWING NO.
6
EARTH TECH DRAWING NO.

The drawings, specifications and other documents prepared by the Engineer for this project are instruments of the Engineer's service for use solely with respect to this project and, unless otherwise provided, the Engineer shall be deemed the author of these documents and shall retain all common law, statutory and other reserved rights, including the copyright.

USER
PENTABLE=\\shbs02\data\plot\tbl\mswaste.tbl
Levels On= 1:63
PRF = \\shbs02\data\work\doyne02\cadd\prf\wdet1.prf
DATE =Thu Dec 28 08:21:26 2000
DGN = \\shbs02\data\work\doyne02\cadd\wdet1.wma
RF1= \\shbs02\data\work\doyne02\cadd\r24x36.wma
Levels On= 1,2,61-63

DGN

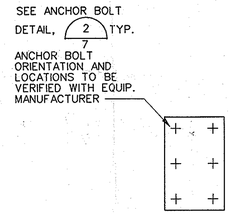

NOTES:

1. FOUNDATION AS SHOWN ON DETAIL 4/7
2. MINIMUM FOUNDATION MASS THREE TIMES EQUIPMENT WEIGHT.
3. RESILIENT PADS AT ANCHOR BOLTS BETWEEN BLOWER/MOTOR BASE SIDERAILS AND CONCRETE FOUNDATION, IN ACCORDANCE WITH BLOWER MANUFACTURERS RECOMMENDATION.

EQUIPMENT FOUNDATION 1/7

NTS

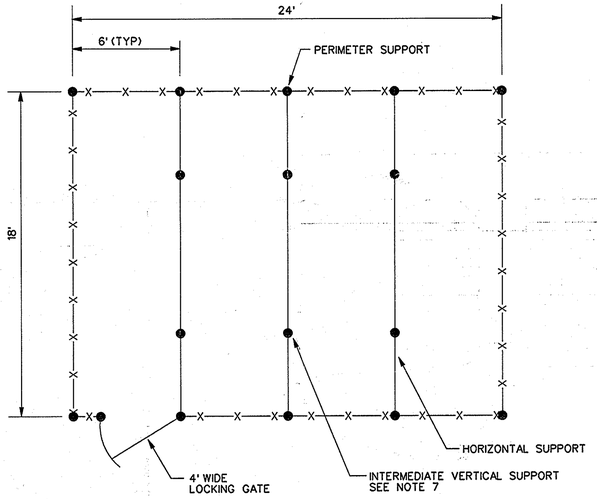

PLAN VIEW OF BLOWER CHAIN LINK ENCLOSURE

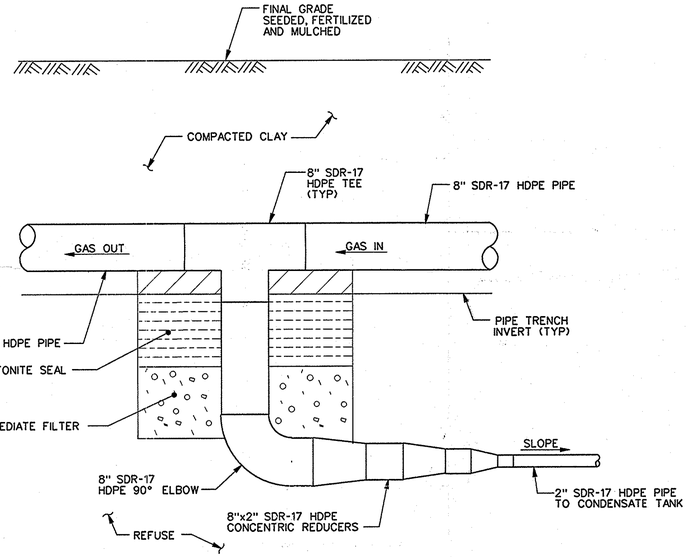

NOTE:

1. SAND/BENTONITE SHALL BE 50% SAND AND 50% BENTONITE BY VOLUME.

CONDENSATE DRAIN - TYPE 1 5/7

NTS

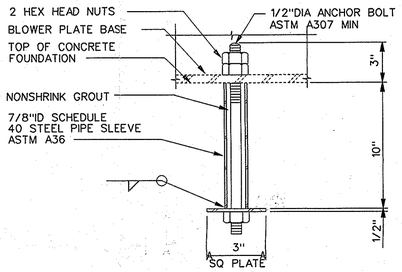

BLOWER ANCHOR BOLT DETAIL 2/7

NTS

NOTES: 1. TACK WELD NUT TO PLATE.

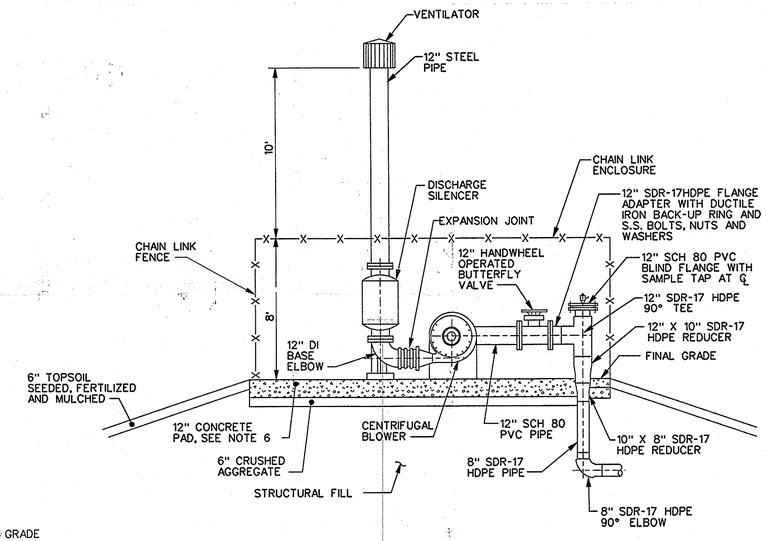

NOTES:

1. DISCHARGE SILENCER UNIVERSAL SILENCER MODEL SU5-12.
2. BLOWER TCF AEROVENT NO W26-12-15. ORIFICE PLATE WAS ADDED ON BLOWER INLET TO IMPROVE BLOWER PERFORMANCE.
3. EXPANSION JOINTS (ONE ON BLOWER INLET AND ONE ON BLOWER DISCHARGE).
4. 12" VENTILATOR
5. FENCED AREA = 24' X 18'.
6. CONCRETE PAD HAS CONTROL JOINTS.
7. INTERMEDIATE VERTICAL SUPPORT IS REMOVABLE TO ALLOW FOR EQUIPMENT REPLACEMENT.

BLOWER DETAIL 4/7

NTS

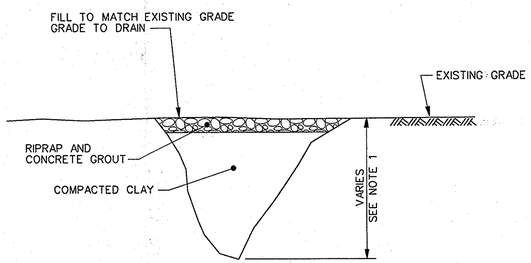

NOTES:

1. ERODED AREAS FILLED WITH COMPACTED CLAY TO WITHIN 6" OF EXISTING GRADE. FILL TO GRADE WITH RIPRAP AND CONCRETE GROUT.

COVER RESTORATION 3/7

NTS

The drawings, specifications and other documents prepared by the Engineer for this project are instruments of the Engineer's service for use solely with respect to this project and, unless otherwise provided, the Engineer shall be deemed the author of these documents and shall retain all common law, statutory and other reserved rights, including the copyright.

NO.	REVISIONS	MADE	CHK	DATE

NAMES — DATE

DRAWN:
DESIGN:
CHECKED:
PE:
APP'D:
APP'D:
APP'D:

EARTH TECH

DOYNE PARK
CITY OF MILWAUKEE
MILWAUKEE COUNTY, WISCONSIN
LANDFILL GAS MIGRATION CONTROL SYSTEM

DETAILS

DATE
SHEET NO.
FILE NO. A-69864
PROJECT No.
CLIENT DRAWING NO.
7
EARTH TECH DRAWING NO.

USER PENTABLE=\\phsb02\data\plot\tbl\mswaste.tbl
Levels: On= 1,2,61-63
RFT= \\phsb02\data\work\doyne02\cadd\24x36.wmo
LP= \\phsb02\data\work\doyne02\cadd\prt\wdat2.prf
PRF= \\phsb02\data\work\doyne02\cadd\prt\wdat2.prf
DATE =Thu Dec 28 08:21:18 2000
DGN= \\phsb02\data\work\doyne02\cadd\WDET2.WMA
DGN

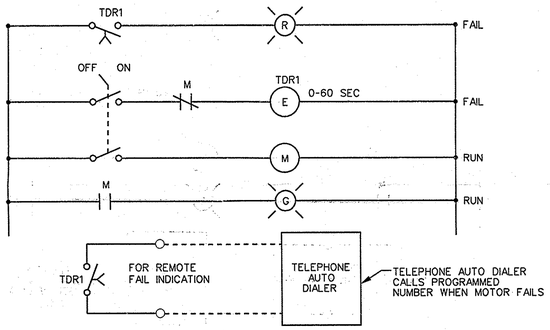

RUN/FAIL CIRCUIT 1/8

NTS

ABBREVIATIONS

A	AMPERE
AFF	ABOVE FINISHED FLOOR
C	CONDUIT
DWG	DRAWING
EP	EXPLOSION PROOF
GRD	GROUND
GRS	GALVANIZED RIGID STEEL
HP	HORSEPOWER
ITC	INSTRUMENTATION TERMINATION CABINET
KVA	KILOVOLT AMPERE
MTR, M	MOTOR
V	VOLTS
TW	TWISTED
SH	SHIELDED
MSC	MANUFACTURER SUPPLIED CABLE

ONE-LINE SYMBOLS

15 (OR) CL 600/500, M — MOLDED CASE CIRCUIT BREAKER
(UPPER NUMERAL INDICATES FRAME SIZE)
(LOWER NUMERAL INDICATES TRIP SETTING)
(CL - INDICATES CURRENT LIMITING CIRCUIT BREAKER)
(M - INDICATES MOTOR CIRCUIT PROTECTOR)

FVNR 2a 1b 2 — MAGNETIC STARTER AND MOLDED CASE CIRCUIT BREAKER
(FVNR - INDICATES FULL VOLTAGE NON-REVERSING)
(RVNR - INDICATES REDUCED VOLTAGE NON-REVERSING)
(2SPD - INDICATES TWO SPEED)
(AUXILIARY CONTACTS - (2a TWO N.O.)(1b ONE N.C.)
(NUMERAL INDICATES NEMA SIZE)

75 — MOTOR
(NUMERAL INDICATES HORSEPOWER)

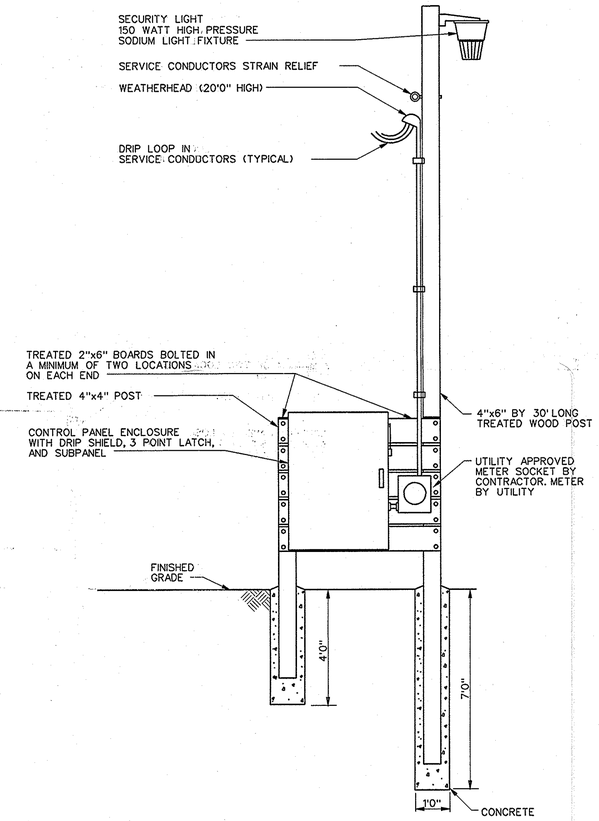

ELECTRICAL EQUIPMENT MOUNTING DETAIL 2/8

NTS

SURFACE MOUNTED NEMA 1
120 / 208 V, 3 PHASE, 4 WIRE
RATING 10,000 A.I.C.

PANEL SCHEDULE LP1

100A MAIN BREAKER
100A MAIN BUS
100A GRD. BUS

CKT. NO.	TRIP/P	DESCRIPTION	PHASE A	PHASE B	PHASE C	DESCRIPTION	TRIP/P	CKT. NO.
1	20/1	RECEPTACLE	-			BLOWER MOTOR	90/3	2
			-					
3	20/1	SECURITY LIGHT		-				4
				-				
5	20/1	PANEL HEATER			-			6
					-			
7	20/1	PANEL LIGHT	-			-	20/1	8
			-					
9	20/1	-		-		-	20/1	10
				-				
11	20/1	-			-	-	20/1	12
					-			
		TOTALS:	-	-	-	-		

NOTE:
MAIN CIRCUIT BREAKER
UL LISTED SUITABLE FOR
USE AS A SERVICE
ENTRANCE DISCONNECT

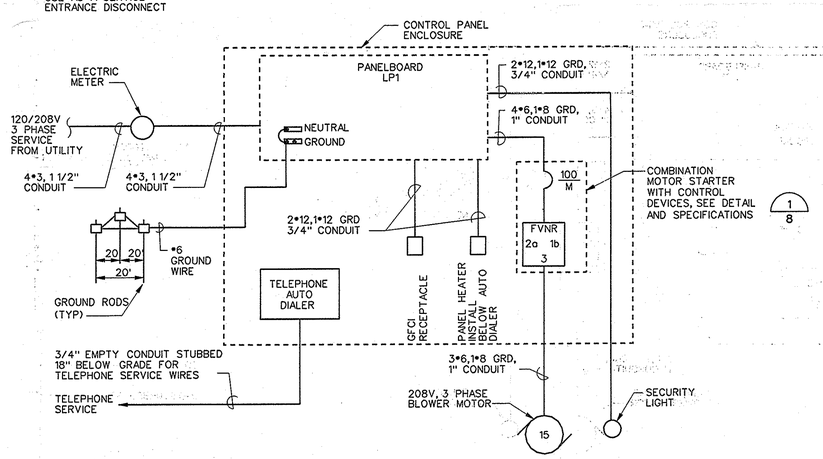

120/208 VOLT, 3 PHASE POWER DISTRIBUTION RISER DIAGRAM 3/8

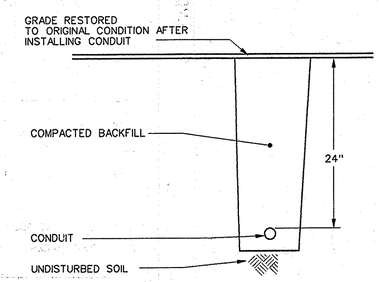

CONDUIT DETAIL 4/8

NTS

NO.	REVISIONS	MADE	CHK.	DATE

NAMES: DRAWN: DESIGN: CHECKED: PE: APP'D: APP'D: APP'D: DATE

EARTH TECH

DOYNE PARK
CITY OF MILWAUKEE
MILWAUKEE COUNTY, WISCONSIN
LANDFILL GAS MIGRATION CONTROL SYSTEM

ELECTRICAL DETAILS

DATE
SHEET NO.
FILE NO. A-69863
PROJECT No.
CLIENT DRAWING NO.
8
EARTH TECH DRAWING NO.

The drawings, specifications and other documents prepared by the Engineer for this project are instruments of the Engineer's service for use solely with respect to this project and, unless otherwise provided, the Engineer shall be deemed the author of these documents and shall retain all common law, statutory and other reserved rights, including the copyright.

USER
PENTABLE=\\sfbs02\data\pbk\tbl\mswaste.tbl
Levels On= 1-58,60-63
RSPC= \\sfbs02\data\work\dpym02\cadd\prf\kicdet.prf
DATE - Thu Dec 28 08:21:10 2000
DGN -\\sfbs02\data\work\dpym02\cadd\kicdet.det
RF1= \\sfbs02\data\work\dpym02\cadd\V24x36.wmz
Levels On= 12,51-63

DGN

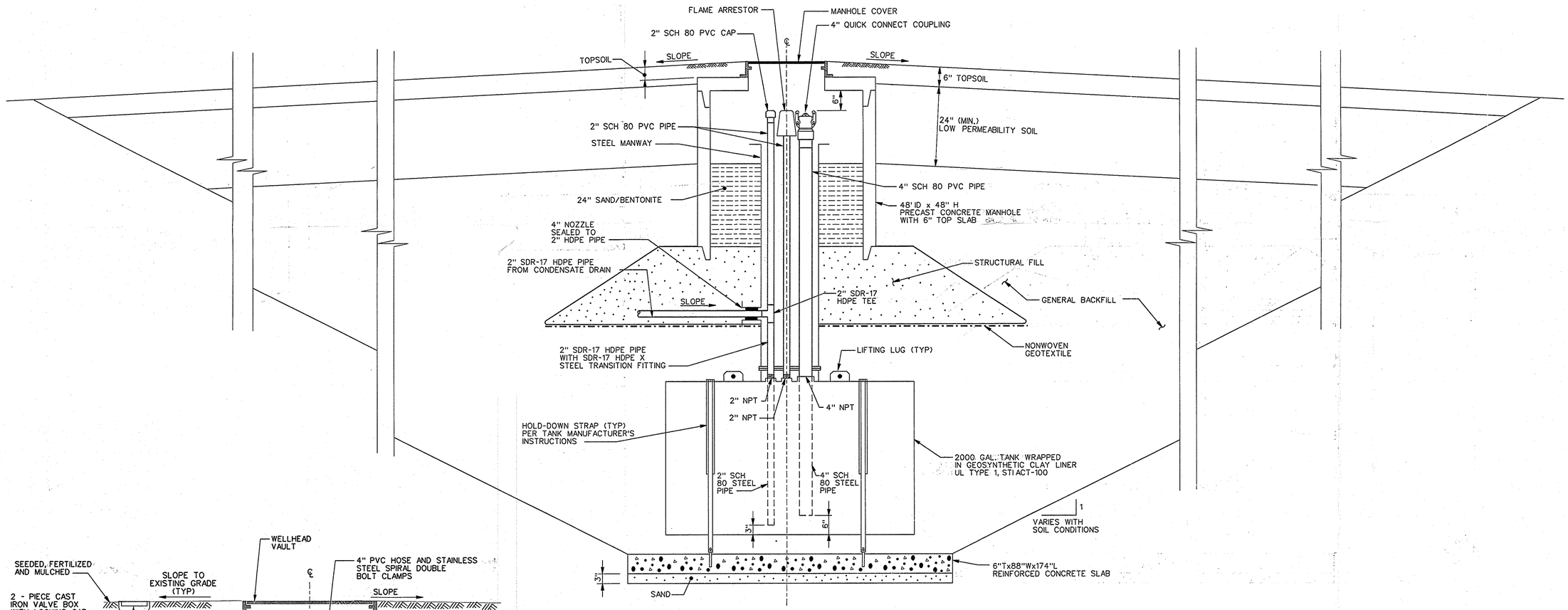

CONDENSATE TANK 1/9

NTS

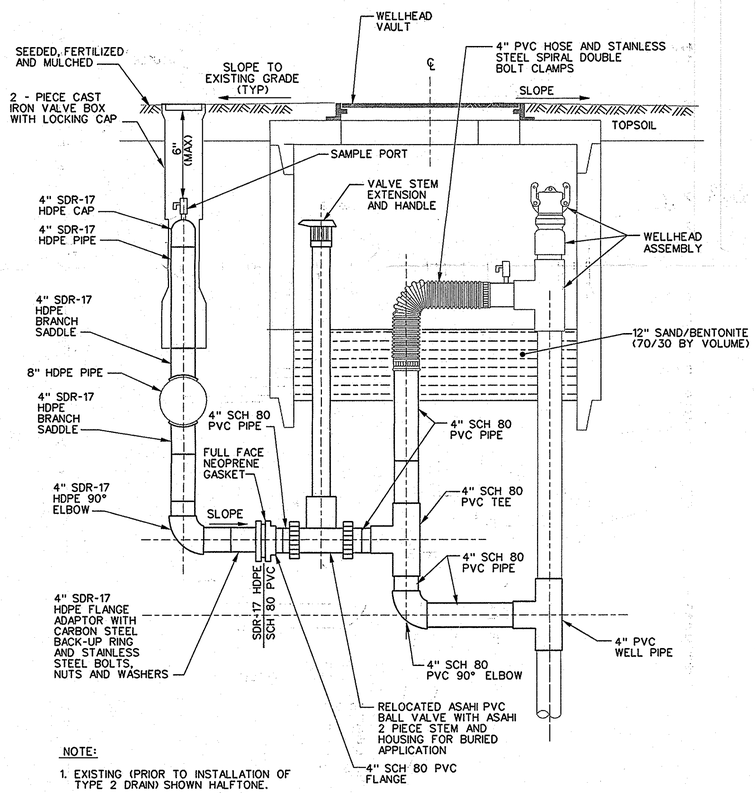

NOTE:

1. EXISTING (PRIOR TO INSTALLATION OF TYPE 2 DRAIN) SHOWN HALFTONE.
2. VERBAL APPROVAL OF LAYOUT PROVIDED BY WDNR.

CONDENSATE DRAIN - TYPE 2 2/9

NTS

The drawings, specifications and other documents prepared by the Engineer for this project are instruments of the Engineer's service for use solely with respect to this project and, unless otherwise provided, the Engineer shall be deemed the author of these documents and shall retain all common law, statutory and other reserved rights, including the copyright.

NO.	REVISIONS	MADE	CHK	DATE

NAMES	DATE
DRAWN:	
DESIGN:	
CHECKED:	
PE:	
APP'D:	
APP'D:	
APP'D:	

EARTH TECH

DOYNE PARK
CITY OF MILWAUKEE
MILWAUKEE COUNTY, WISCONSIN
LANDFILL GAS MIGRATION CONTROL SYSTEM

DETAILS

DATE

SHEET NO.

FILE NO. A-69864

PROJECT No.

CLIENT DRAWING NO.

9

EARTH TECH DRAWING NO.

DGN

APPENDIX B

MANUFACTURER'S INSTRUCTIONS FOR BLOWER STATION

ROLOFF Engineering Co

279 S. 17th Avenue, Suite 3 • West Bend, WI 53095
Tel: 262-338-0483 • Fax: 262-338-2342
E-Mail: rolofeng@execpc.com
www.execpc.com/~rolofeng/

To: TRAVIS RUTTA
From: MARCIA LANGE
Company: EARTH TECH
Date: 1-17-00
Fax #: 920-458-0550
Pages: 3
Re: SO# 321564 Blower Curve
CC:

TRAVIS:

ENCLOSED IS fan curve for this blower based on the data you provided. Call if you need any other information.

Regards,
Marcia Lange

Aerovent

118

Customer: Earth Tec	Fan Tag: W26/12-HPB-3500-15	CFM: 550
Job ID: SO# 321564	Model: W26/12 HPB	SP: 49.2 in.wg
Represented By: Roloff Engineering Company 262-338-0483		RPM: 3503
		BHP: 12.14
		Outlet Velocity: 701
		Density: 0.075

AEROVENT PERFORMANCE CURVE

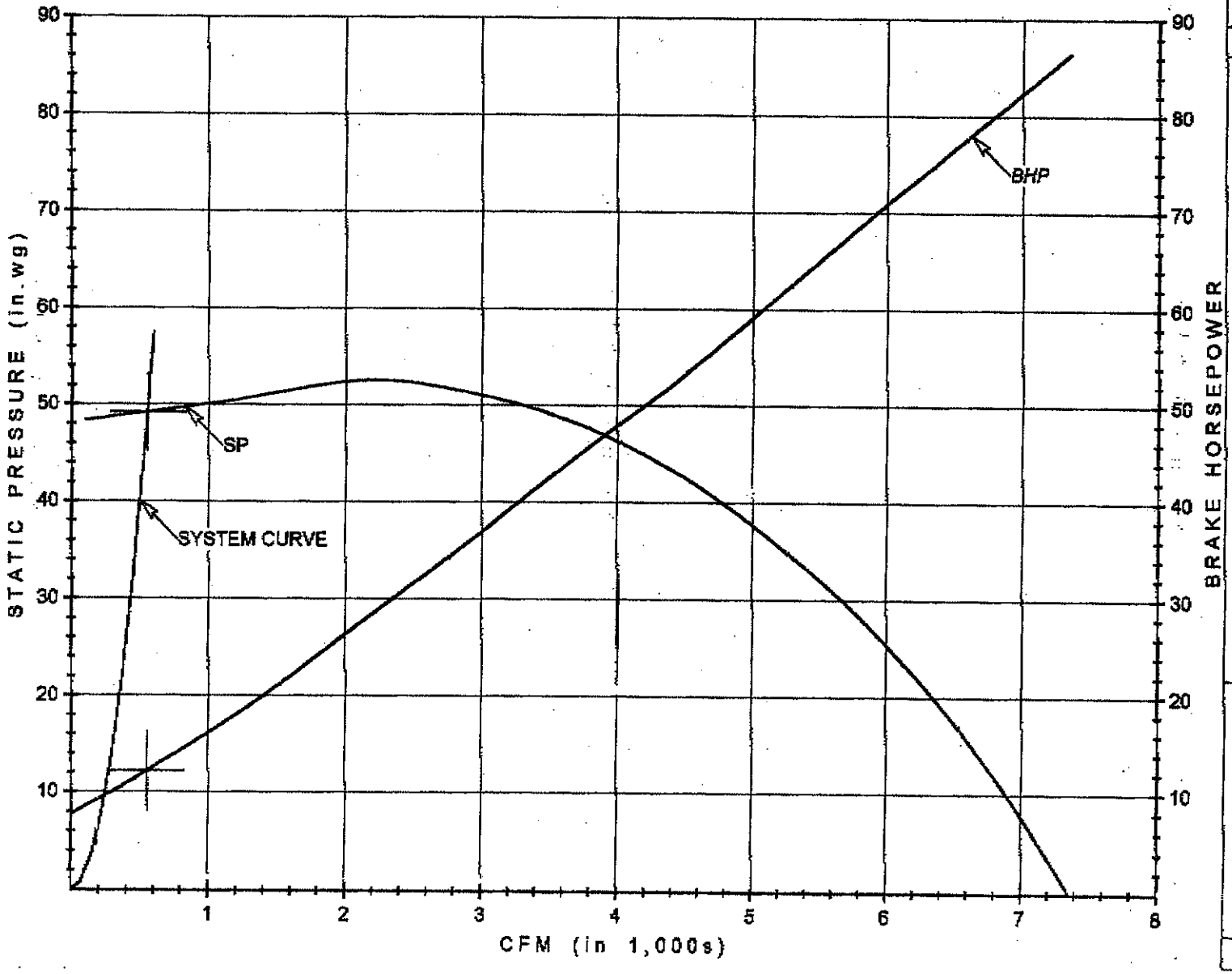

Inlet Sound Power Octave	Level
1	126
2	116
3	110
4	114
5	115
6	110
7	103
8	102

In db re 10^{-12} watts

1/17/00 15:07 #77

TC AEROVENT
Plymouth, Minnesota

FAN SUBMITTAL DATA

CERTIFIED FINAL/RECORD PRINTS
SPARE PARTS LIST
CUSTOMER ORDER NO. 66255
TCF/AEROVENT S.O. 321564

Print No. R-19773-00/321564

SPECIAL MARKINGS
PO# 66255

CUSTOMER
FORRER SUPPLY
N117 W18388 FULTON DRIVE
GERMANTOWN, WI 53022

CATALOG NO. W26/12-HPB-3500-15
FAN TYPE HI-PRESS. BLOWER-ARR#1-CW-BH
NUMBER OF UNITS 1
HOUSING MATERIAL STEEL

IMPELLER W26HPB DIA 26
NO. BLADES 10 ANGLE SETTING DEG @
BORE 1 15/16 KEYWAY 1/2 X 1/4
MATERIAL ALUMINUM
BUSHING NO. Q1

BEARING TYPE PILLOW BLOCK, H.D. BALL
SHAFT DIA. 1 15/16 SHAFT MATERIAL STEEL
LUBRICATION AMOCO RYKON NO. 2 EP

MTR. SHEAVE 2B5V48 P.D. 5.1 FIXED
FAN SHEAVE 2B5V48 P.D. 5.1
V-BELT NO. (2) BX75
FURNISHED BY TCF/AEROVENT

MOTOR MFG. .
HP 15 RPM 3500 FRAME 254T
VOLTS 230/460 PHASE 3 HERTZ 60
ENCLOSURE EX-PROOF

FURNISHED BY TCF/AEROVENT
MOUNTED BY TCF/AEROVENT

ACCESSORIES
OSHA BELT GUARD
12" FLANGED INLET
12" FLANGED OUTLET
SHAFT & BEARING GUARD
BUNA "N" SHAFT SEAL
HOUSING SEAL WELD
THRUST VANES ON WHEEL
12" INLET FILTER/SILENCER W/HOUSING
12" OUTLET SILENCER
SPARK RESISTANT TYPE "B"

PERFORMANCE

STANDARD AIR	ACTUAL AT CONDITIONS
70 DEG F @ SEA LEVEL	DEG F @ FT.
CFM 550	CFM
SP 49.2	SP
BHP 12.12	BHP
RPM 3500	RPM

FINISH
FARBOIL ENTIRE UNIT INCLUDING EXTERIOR OF INLET & OUTLET SILENCERS

Prepared By KLK Dept. of Eng. Date 04-17-1997

Copies Prints 8 Reproducibles 0

Aerovent®

SERIES 14 HIGH PRESSURE BLOWER

ARRANGEMENT 1

DISCHARGE POSITION →	TOP HORIZONTAL	BOTTOM HORIZONTAL	UP BLAST	TOP 45° DOWN	BOTTOM 45° UP	TOP 45° UP
ROTATION: CLOCK-WISE → *	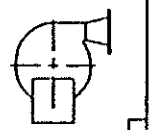	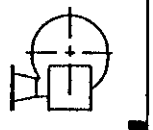	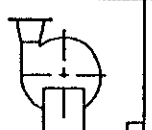	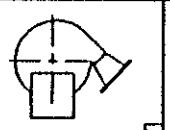	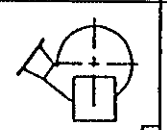	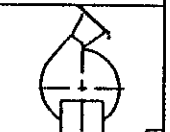
ROTATION: COUNTER CLOCK-WISE → *	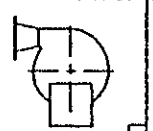	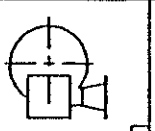	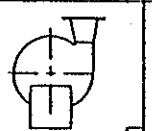	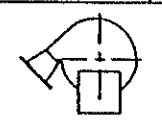	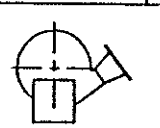	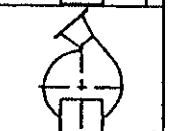

REF. DWG. -
R-19629-00 FOR OUTLET FLANGES
R-19630-00 FOR INLET FLANGES
R-21546-00 FOR PIPE INLET

* DOWN BLAST DISCHARGE IS ALSO AVAILABLE BUT NOT SHOWN - REQUIRES SPECIAL CONSTRUCTION.

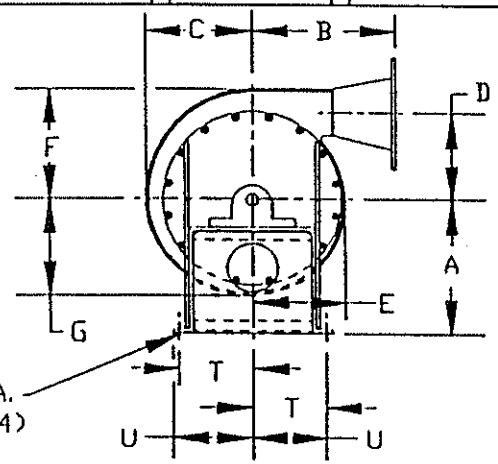

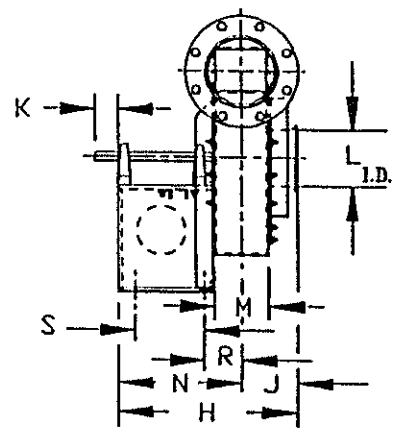

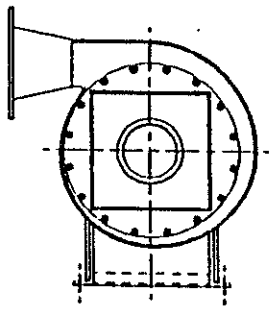

HSG. SIZE	WHEEL SIZE	OUTLET FLANGE	SHAFT DIA.	A	B	C	D	E	F	G	H	J	K	L	M	N	R	S	T	U
18"	14" 15" 16" 17" 18"	4" 6" 8"	1 1/2	18 3/8	17 1/4	12 7/16	10 9/16	10 13/16	13 3/16	11 11/16	23 3/4	6 1/2	3 1/2	6 5/8	6 1/4	17 1/4	4 1/4	12	8 3/4	9 5/8
22"	19" 21" 22"	4" 6" 8" 10"	1 1/2	24 3/8	17 3/4 21 3/4	16 5/8	14 3/4	14 1/2	17 5/8	15 5/8	23 3/4	6 1/2	4	6 5/8	6 1/4	17 1/4	4 3/8	12	11	11 7/8
26"	23" 24" 25" 26"	6" 8" 10" 12"	1 1/2	26 7/8	19 23	18 11/16	16 11/16	16 7/16	19 13/16	17 9/16	23 1/2	6 1/2	5	8	5 3/4	17	4 7/8	12	12 3/8	13 1/4
W26"	W21" W22" W23" W24" W25" W26"	12"	1 15/16	26 7/8	27	18 11/16	16 11/16	16 7/16	19 13/16	17 9/16	25 3/8	7 7/16	6	8	7 5/8	17 15/16	5 13/16	12	12 3/8	13 1/4

DRAWN BY MAKI
CHECKED BY
DATE PC 11/20/95
DRAWING NO. R-19773-00
PRINT NO. 321564
CHG. G

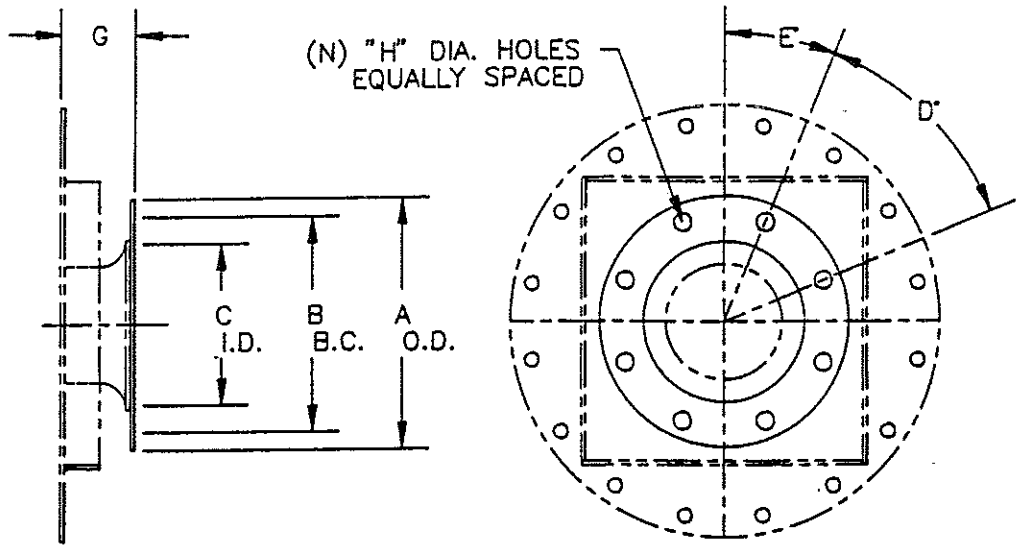

HOUSING SIZE	NOM. INLET FLANGE	A	B	C	D	E	G	H	N
18	6	11	9 1/2	8 1/8	45	22 1/2	3 5/8	7/8	8
	8	13 1/2	11 3/4	8 1/8	45	22 1/2	3 5/8	7/8	8
22	6	11	9 1/2	8 1/8	45	22 1/2	3 5/8	7/8	8
	8	13 1/2	11 3/4	8 1/8	45	22 1/2	3 5/8	7/8	8
	10	16	14 1/4	8 1/8	30	15	3 5/8	1	12
26	8	13 1/2	11 3/4	10 3/8	45	22 1/2	3 7/8	7/8	8
	10	16	14 1/4	10 3/8	30	15	3 7/8	1	12
	12	19	17	10 3/8	30	15	3 7/8	1	12
W26	12	19	17	10 3/8	30	15	3 7/8	1	12

Aerovent®	INLET FLANGE	DRAWN BY CW	DRAWING NO. R-19630-00	CHG. A
		CHECKED BY FJH	PRINT NO. 321564	
	FOR SERIES 14 HIGH PRESSURE BLOWERS	DATE PC 2-17-92		

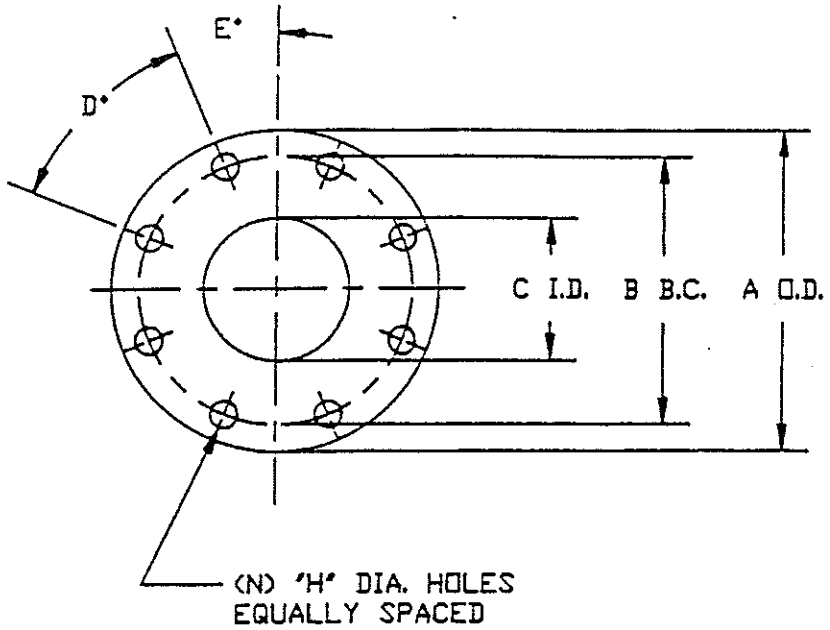

NOM. OUTLET FLANGE	A	B	C	D	E	H	N	GA.
4	9	7 1/2	4	45	22 1/2	3/4	8	1/4
6	11	9 1/2	6	45	22 1/2	7/8	8	1/4
8	13 1/2	11 3/4	8 1/8	45	22 1/2	7/8	8	1/4
10	16	14 1/4	10 3/8	30	15	1	12	1/4
12	19	17	12	30	15	1	12	1/4

Aerovent SUBSIDIARY OF FLAKT	OUTLET FLANGE	DRAWN BY WB	DRAWING NO. R 19629-00	CHG. A
		CHECKED BY FJH	PRINT NO. 321564	
	FOR SERIES 14 HIGH PRESSURE BLOWERS	DATE PC 2-26-90		

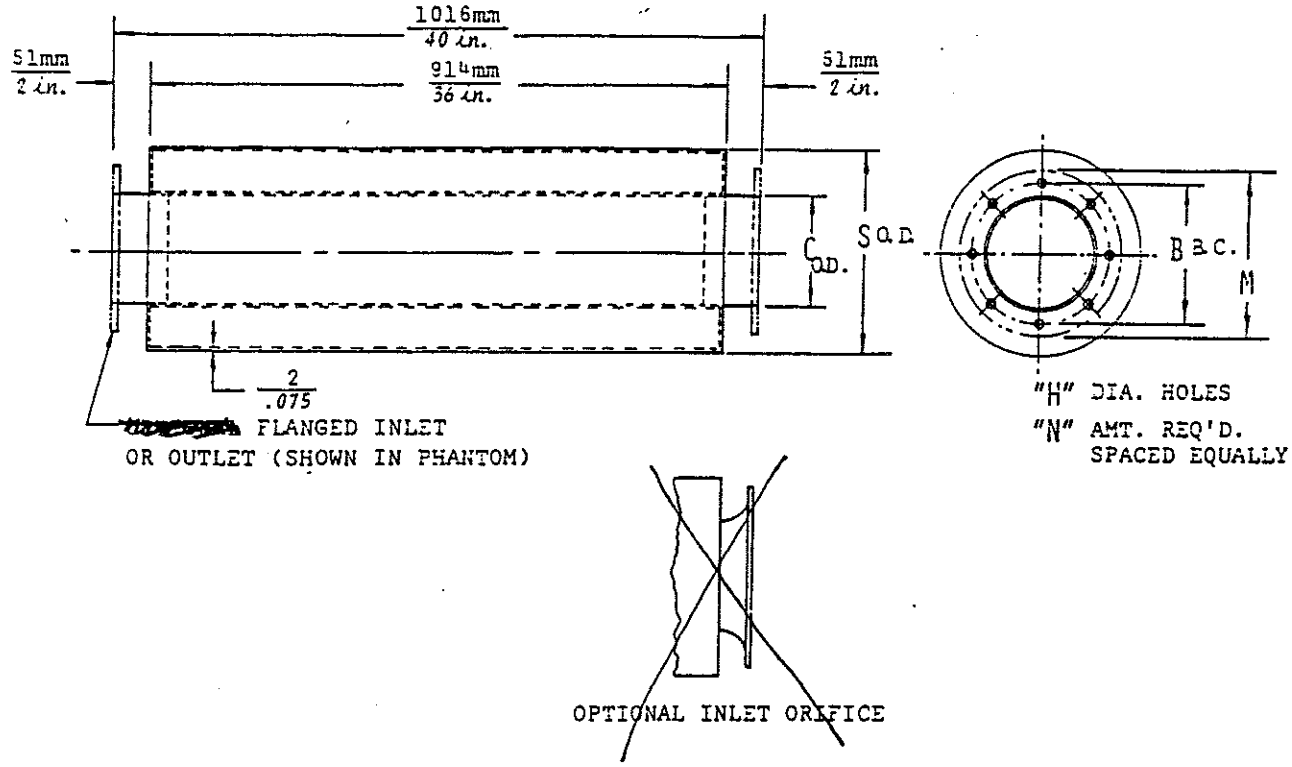

Metric standard. English conversion within manufacturing tolerances.

SILENC. SIZE	$B_{B.C.}$ mm in.	$C_{O.D.}$ mm in.	$H_{DIA.}$ mm in.	M mm in.	N	$S_{O.D.}$ mm in.	INLET OR OUTLET AREA	APPROX. WEIGHT
4	191	105	19	229	8	356	.072	31.75
	7 1/2	4 1/8	3/4	9		14	.087	70
6	241	156	22	279	8	356	.164	34.02
	9 1/2	6 1/8	7/8	11		14	.196	75
8	298	206	22	343	8	356	.292	36.29
	11 3/4	8 1/8	7/8	13 1/2		14	.349	80
10	362	260	25	406	12	508	.456	56.70
	14 1/4	10 1/4	1	16		20	.545	125
12	432	311	25	483	12	508	.656	58.97
	17	12 1/4	1	19		20	.785	130

Aerovent Inc. PIQUA, OHIO	HIGH PRESSURE BLOWER SILENCER	DRAWN BY F.A.S.	DRAWING NO. B-10448	CHG.
	FOR: OUTLET	CHECKED BY R.E.P.	PRINT NO. 321564	
		DATE 3-4-77		

AEROVI NO.	VENDOR NO.	VENDOR	DESCRIPTION	MAX CFI	CONN. SIZE	A	B	C	D	E	THRE SIZE
25991-..1	OFS06FL-12	IFM	W/O HOOD	1000	6	12 5/8	9 1/2	--	25 1/8	4	3/4-10
25991-02	OFS06FLH-12	IFM	FILTER & HOOD	1000	6	12 5/8	9 1/2	16 1/4	25 1/8	4	3/4-10
25991-03	OFS06FL-14	IFM	W/O HOOD	1350	6	14 5/8	9 1/2	--	29 1/8	4	3/4-10
25991-04	OFS06FLH-14	IFM	FILTER & HOOD	1350	6	14 5/8	9 1/2	18	29 1/8	4	3/4-10
25991-05	OFS08-18	IFM	W/O HOOD	2250	8	18 5/8	11 3/4	--	37 1/8	4	3/4-10
25991-06	OFS08H-18	IFM	FILTER & HOOD	2250	8	18 5/8	11 3/4	24	37 1/8	4	3/4-10
25991-07	OFS08-14	IFM	W/O HOOD	1350	8	14 5/8	11 3/4	--	29 1/8	4	3/4-10
25991-08	OFS08H-14	IFM	FILTER & HOOD	1350	8	14 5/8	11 3/4	18	29 1/8	4	3/4-10
25991-09	OFS10-22	IFM	W/O HOOD	3250	10	22 5/8	14 1/4	--	45 1/8	6	7/8-9
25991-10	OFS10H-22	IFM	FILTER & HOOD	3250	10	22 5/8	14 1/4	32	45 1/8	6	7/8-9
25991-11	OFS12-22	IFM	W/O HOOD	3250	12	22 5/8	17	--	45 1/8	6	7/8-9
25991-12	OFS12H-22	IFM	FILTER & HOOD	3250	12	22 5/8	17	32	45 1/8	6	7/8-9
25991-13	OFS12-225	IFM	W/O HOOD	4000	12	22 5/8	17	--	51 1/8	6	7/8-9
25991-14	OFS12H-225	IFM	FILTER & HOOD	4000	12	22 5/8	17	32	51 1/8	6	7/8-9
25991-15	OFS12-30	IFM	W/O HOOD	6000	12	30 5/8	17	--	61 1/8	6	7/8-9
25991-16	OFS12H-30	IFM	FILTER & HOOD	6000	12	30 5/8	17	42	61 1/8	6	7/8-9

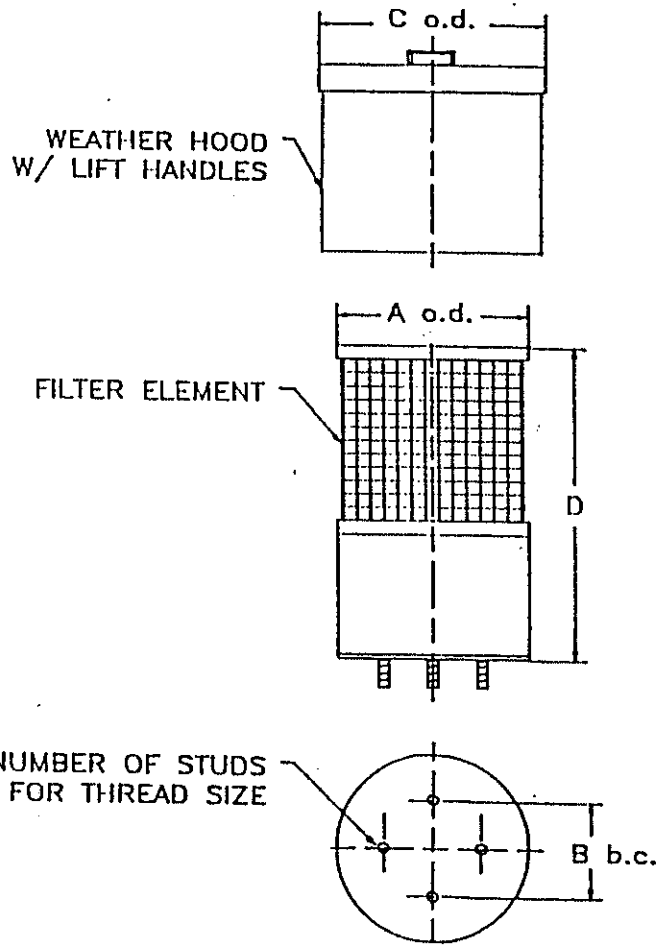

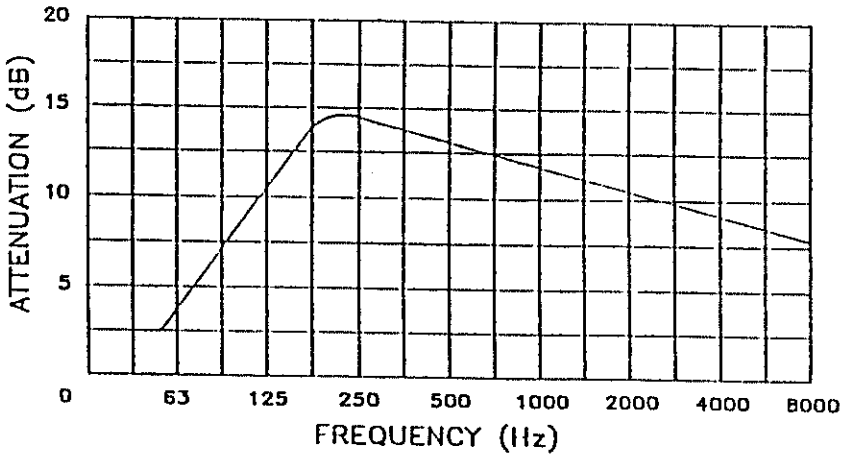

S.O. 321564

Aerovent Inc., Piqua, Ohio

Title *INLET FILTER-SILENCER*

Drawn	Checked	Date	Scale	Drawing No.
[illegible]M	JM	[illegible]25-[illegible]	NT[illegible]	D2[illegible]7/-[illegible]

MOTOR POSITION 'Z'

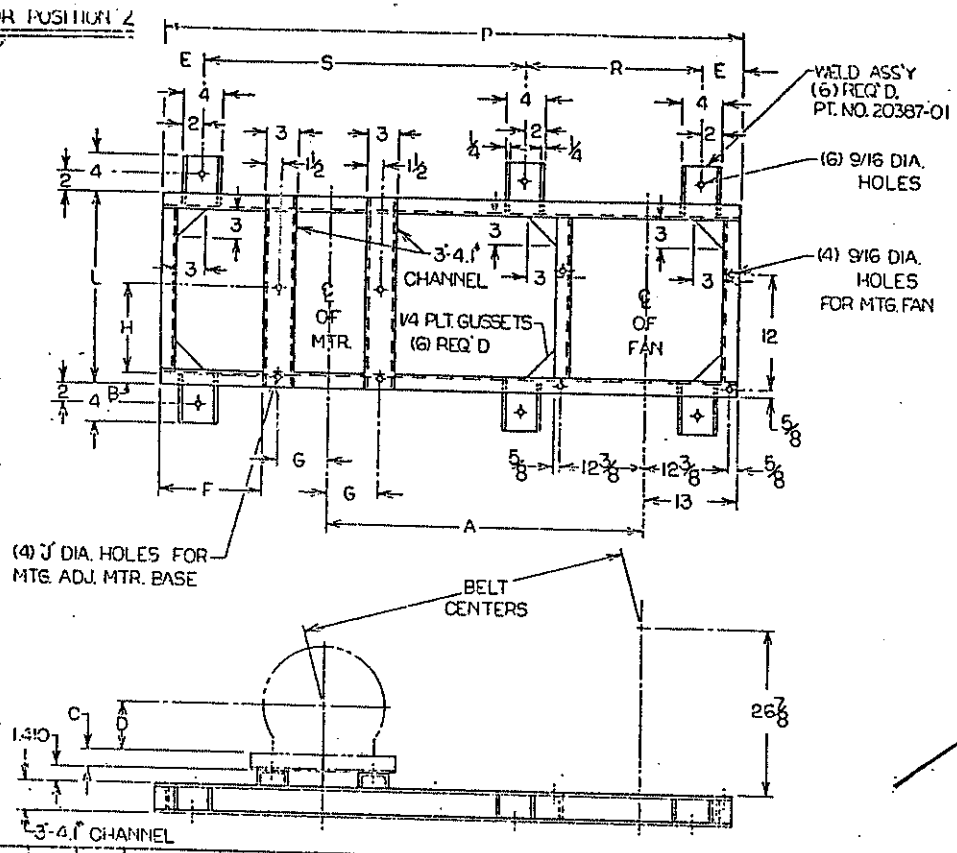

MOTOR POSITION 'W'

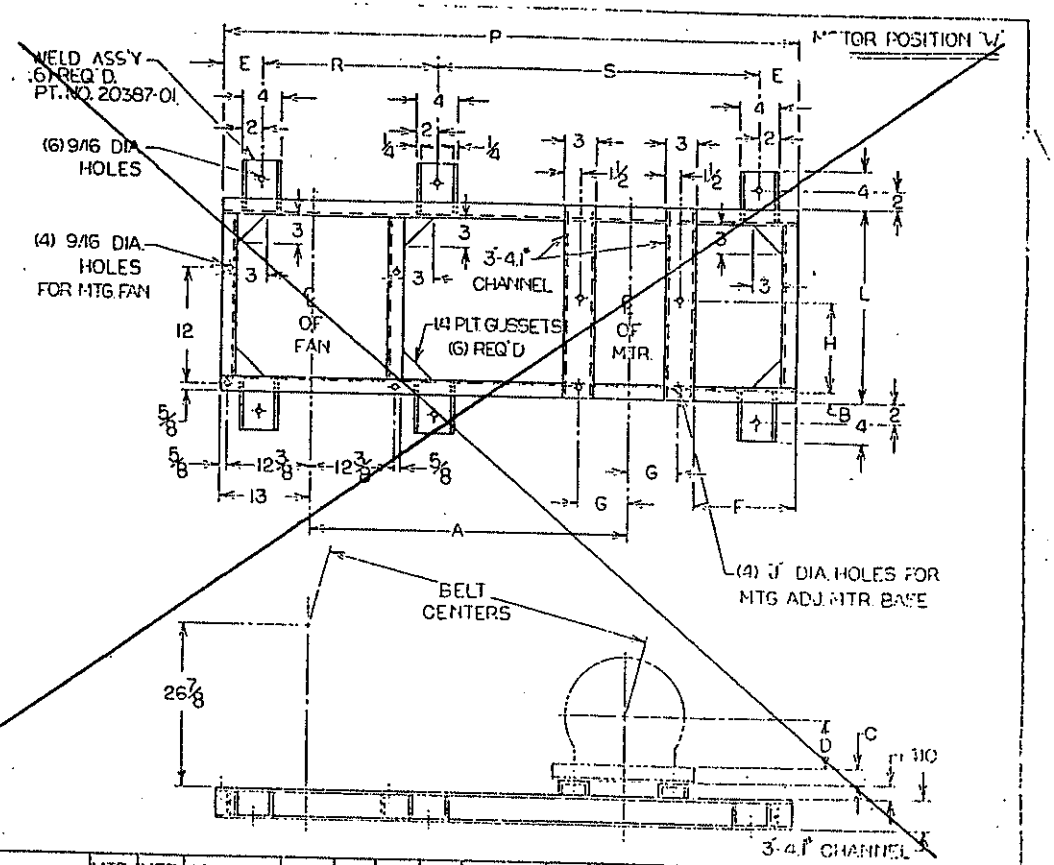

PART NO.	MTR. POS.	MTR. FR.	ADJ. MTR. BASE	BELT CTRS	A	B	C	D	E	F	G	H	J	L	P	R	S
18595-01	Z	254T	1865-01E	33.50/29.50	26 5/16	1 3/8	2	6 1/4	4	6	6 1/4	13 1/4	5/8	16	53 1/16	22 17/32	22 17/32
18595-02	W																
18595-03	Z	256T	1865-02E	33.50/29.50	26 5/16	1 3/8	2	6 1/4	4	6	6 1/4	15	5/8	18	53 1/16	22 17/32	22 17/32
18595-04	W																
18595-05	Z	284T	1865-03E	34.63/30.13	27 15/16	1 5/8	2	7	4	6	7	15	5/8	20	55 7/16	23 23/32	23 23/32
18595-06	W																
18595-07	Z	286T	1865-04E	34.63/30.13	27 15/16	1 5/8	2	7	4	6	7	16 1/2	5/8	20	55 7/16	23 23/32	23 23/32
18595-08	W																
18595-09	Z	324T	1865-05E	36.63/31.38	30 1/2	1 5/8	2 1/2	8	4	6	8	17	3/4	22	59	25 1/2	25 1/2
18595-10	W																
18595-11	Z	326T	1865-06E	36.63/31.38	30 1/2	1 5/8	2 1/2	8	4	6	8	18 1/2	3/4	22	59	25 1/2	25 1/2
18595-12	W																
18595-13	Z	213T	1865-18E	32.25/28.75	24 1/4	1 1/8	1 3/4	5 1/4	4	6	5 1/4	9 1/2	1/2	20	50	21	21
18595-14	W																
18595-15	Z	215T	1865-19E	32.25/28.75	24 1/4	1 1/8	1 3/4	5 1/4	4	6	5 1/4	11	1/2	20	50	21	21
18595-16	W																

PART NO.	MTR. POS	MTR. FR.	ADJ. MTR. BASE	BELT CTRS	A	B	C	D	E	F	G	H	J	L	P	R	S
18595-17	Z	182T	1865-16E	26.50/23.50	22 3/4	1 7/16	1 1/2	4 1/2	4	5 1/2	4 1/2	8 1/2	1/2	18	48 1/4	20 1/8	20 1/8
18595-18	W																
18595-19	Z	184T	1865-17E	26.50/23.50	22 3/4	1 7/16	1 1/2	4 1/2	4	5 1/2	4 1/2	9 1/2	1/2	18	48 1/4	20 1/8	20 1/8
18595-20	W																
18595-21	Z	364T	1865-07E	38.38/32.38	32 1/2	3 1/32	2 1/2	9	4	8 1/2	9	18 1/4	3/4	24	64 1/2	26 1/4	26 1/4
18595-22	W																
18595-23	Z	365T	1865-08E	38.38/32.38	32 1/2	4 1/32	2 1/2	9	4	8 1/2	9	19 1/4	3/4	24	64 1/2	26 1/4	26 1/4
18595-24	W																

NOTE: MOTOR POSITION 'W' REQUIRES F2 MOTOR BLOWERS TO BE MOUNTED TOP HORIZONTAL, BOTTOM HORIZONTAL OR UP BLAST.

S.O. 321564

A	3-22-84 ADDED -05 THRU -12	CC
B	6-29-87 ADDED -13 THRU -16	
C	10-23-88 ADDED -17 THRU -24 & NOTE	
—	---- REVISED DIMENSIONS	

NAME: UNITARY BASE MOTOR POSITIONS 'Z'/'W' SIZE 670

FOR: SERIES 14 HIGH PRESSURE BLOWERS

DRAWN: CC 12-20-81

SCALE: NTS

CENTRIFUGAL FANS

INSTALLATION

A good solid foundation is required for vibration free operation. A correctly designed concrete foundation provides the best means of mounting floor units. The exact size of the foundation is determined by fan size and arrangement, motor size and position, and the specific location of the installation. The overall dimensions of the foundation should extend at least six inches beyond the outline of the fan and its motor.

The weight of the foundation should be two to three times the weight of the unit and its motor. The foundation should provide a means such as anchor bolts firmly set in the concrete by which the unit can be firmly secured to the foundation. Pipe sleeves approximately two inches larger in diameter than the anchor bolts should be placed around the bolts in the concrete. This will allow for adjustment of the anchor bolts when positioning the fan on the foundation.

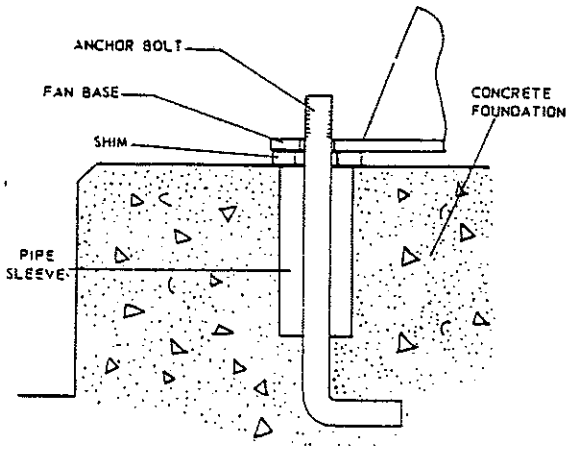

V BELT DRIVE

On belt driven units, position and anchor the motor slide base firmly to the foundation or bearing base. Mount the motor on the slide base and move the motor to the position closest to the fan. The V-belt drive should be mounted as follows:

1. Remove dirt and corrosion from fan and motor shafts.

2. Coat bores of sheaves with grease or oil and mount sheaves on the shafts. Do not force the sheaves on the shafts by hammering as this will damage the fan and motor bearings.

3. Install the belts. Belts should be worked carefully over the grooves of each sheave until they are properly in place. Belts should never be forced on with a screwdriver or similar tool as this will break the cords in the belts. After the belts have been installed, adjust the sheaves so that both shafts are at right angles to the belts. Once proper alignment is assured, tighten sheaves in place.

4. Take up slack by adjusting the motor slide base. Proper belt tension is important. If belts are too tight, undue wear on fan and motor bearings will result. Insufficient tension shortens belt life and may cause vibration. Use drive manufacturer's recommendations for correct belt tension.

5. **IMPORTANT:** BEFORE PUTTING THE UNIT INTO CONTINUOUS OPERATION, INSTALL BELT GUARD.

6. After several days of operation, check belt tension and sheave alignment.

Elevated or suspended structural steel platforms should have sufficient diagonal bracing for supporting the load and preventing side sway. The platforms should be of welded construction to maintain permanent alignment of all members.

Move the fan to its rigid foundation or platform and position the unit over the anchor bolts, being careful not to damage the bolt threads. Level the fan by placing shims around the anchor bolts and secure the fan to the foundation.

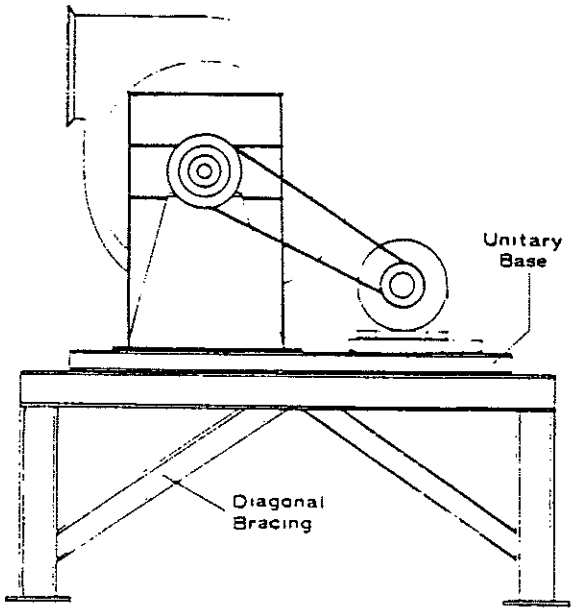

BEARINGS

Before the unit is put in operation, tighten bearing collar setscrews and bearing anchor bolts. Rotate shaft to check alignment.

All grease lubricated bearings are completely filled with grease prior to shipment from the factory. This prevents the condensation of moisture in the pillow block during shipment and before the unit is installed.

IMPORTANT

The bearings will discharge excess grease through the seals for a short period of time after start-up. Do not replace this initial discharge, because leakage will cease after the excess grease has been purged from the bearings. Also, the purging of the excess grease will cause the bearing to heat up, but the heat will dissipate after the purging.

Observation of the condition of the grease expelled from the bearing at the time of relubrication is the best guide as to whether the regreasing intervals and amount of grease added should be altered. When regreasing, use lubrication instructions for fan ball bearings as outlined in IM-100 which is included with shipment. Avoid mixing different types of grease. Bearings should be flushed and refilled with fresh grease at approximately one-year intervals. DO NOT OVER LUBRICATE.

COUPLINGS

Direct Drive Fans, which are shipped completely assembled with motor and coupling mounted, should be checked for correct coupling alignment before putting the unit in operation. Also check lubricant, following manufacturer's recommendations for type and amount of lubricant used.

For field installation, the coupling should be mounted as follows:

1. Remove dirt or rust from fan and motor shafts and coat with grease or oil for easy mounting of coupling.

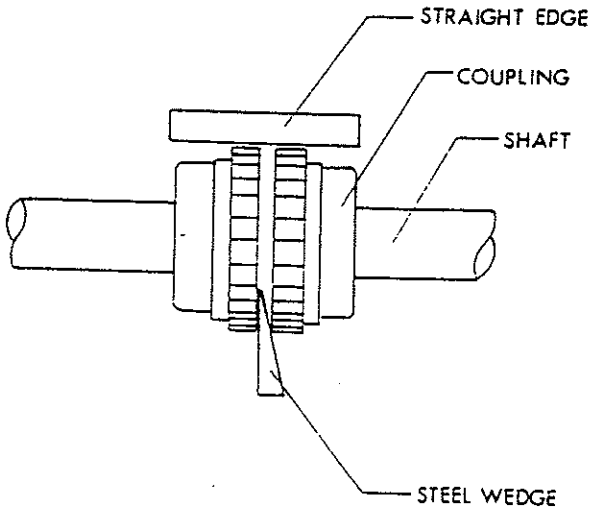

2. Mount the coupling halves on the shafts with the faces separated by the coupling manufacturer's specified gap.

3. The coupling should be checked for parallel and angular alignment with a straight-edge and feeler gauge. Exact tolerances are specified by the coupling manufacturer.

4. Once proper alignment is assured, complete the assembly and lubricate the coupling before putting the unit into operation.

After a short period of operation recheck alignment.

MAINTENANCE

Regular and systematic inspection of all fan parts is the key to good fan maintenance. Frequency of inspection is determined by the severity of the application and local conditions. Once a maintenance schedule is established, it should be strictly followed. Regular fan maintenance should include the following:

1. Check fan wheel for any build-up of foreign material or excessive wear from abrasion. Both can cause vibration which creates a serious safety hazard. Any build-up of foreign material should be removed. If the wheel shows excessive wear, replace it immediately.

2. On belt driven units, check V-belt drive for proper alignment and tension. If belts show wear, they should be replaced with a matched set of belts. If unit is direct driven, check coupling alignment.

3. Lubricate the bearings (see bearing section for lubrication specifications). On direct drive units, lubricate the coupling (see coupling section).

4. Lubricate shaft seal with the same grease as used on the fan bearings. IMPORTANT: The operating life of the shaft seal is dependent upon the amount and frequency of lubrication. Insufficient grease in the shaft seal may result in damage to the seal and reduced sealing efficiency.

5. A final check on the tightness of all setscrews and bolts completes the maintenance routine.

IM-100
September 1996

General Installation, Operation and Maintenance Instructions For Aerovent Products

Introduction

This manual has been prepared to guide the users of Aerovent equipment in the proper installation, operation and maintenance procedures to insure maximum equipment life and trouble-free operation.

Receiving

Products leaving the assembly plant have been inspected and are in satisfactory operating condition. The carrier assumes full responsibility for material from the time it leaves the plant until it is delivered to the user. Therefore, material should be inspected for damage immediately so that any damage claims against the carrier can be made before acceptance of the shipment. No equipment is to be returned without an authorized returned goods tag.

Handling

All products must be handled with extreme care to avoid misalignment of rotating components. Never lift a unit assembly by using the shaft, drive sheaves, wheel or motor as a point of attachment. If it is apparent that slings will not clear a portion of the product being hoisted, a spreader should be used to avoid damage.

Initial Operation

All Aerovent fans are lubricated at the factory and have been given a run-in test before shipment. Read carefully all installation and maintenance manuals before following the start-up check list.

Safety Precautions

Any piece of machinery should be treated with respect and not overconfidence. Overconfidence usually leads to carelessness and carelessness leads to injury. Following is a list of DO's and DO NOT's:

DO

1. Make sure the unit is stopped and electrical power is locked out before putting hands into the inlet or outlet openings or near belt drive. A warning sign on START SWITCH cautioning not to start is recommended when the unit is being serviced.
2. Follow maintenance instructions.

DO NOT

1. Put hands near or allow loose or hanging clothing to be near belts or sheaves while the unit is running.
2. Put hands into inlet or outlet while unit is running. It is sometimes difficult to tell whether or not it is running . . . be sure it is not running and cannot be operated before any inspection.

Start-Up Check List

1. Inspect the equipment for any shipping damage. Remove any foreign material such as tags or packing from any moving parts or from within the fan housing.
2. Compare the voltage, hertz, and phase stamped on the motor with the current characteristics of the line to which the motor is to be connected.
3. Lock out power source at disconnect switch.
4. Turn motor, drive, and propeller by hand to see that no misalignment has taken place in shipment. Check V-belt drive for proper alignment and belt tension.
5. Check all bolts, screws and fasteners and tighten if necessary. Make certain all setscrews, locking collars and bearing mounting bolts are secure.
6. Secure and check clearance of access doors, belt guards and inlet and outlet guards.
7. If equipped with dampers, check for correct linkage operation. Make sure that the operator opens or closes these control devices to the proper positions.
8. Jog the fan electrically and note rotation. Reverse two electrical leads, if necessary, to obtain proper rotation as marked with rotation arrow on fan. Do not allow the propeller to run backwards except momentarily.
9. **Centrifugal Fans:** Close dampers as required for adequate system resistance to prevent motor from overloading.

©1996 TCF Aerovent

CAUTION: With fans that use the forward-curve or radial type of wheel, it is possible to overload the motor if the fan is operated at a lower static pressure than that which the fan is rated. Check catalog rating of the fan for proper speed and resistance.

10. Start the fan and observe its operation.
11. Take motor amp reading and compare with amp rating on motor. (Actual running amps should not exceed motor nameplate amps x service factor, exceptions may be taken for air over motors.)

Fan Balance

Fan propellers are statically and dynamically balanced within acceptable tolerances at the factory. Damage in shipping and handling or poor installation of the unit may upset the unit balance. A propeller that is not properly balanced can lead to excessive vibration causing undue wear on the entire unit. It is recommended that a vibration test be made on the fan after installation by an experienced technician.

CAUTION: For units furnished less final drive components at customer request, the addition of drive components in the field can create critical vibration modes. TCF Aerovent strongly recommends a final unit balance procedure after all rotating components are installed. Failure to do so voids TCF Aerovent's warranty.

All Aerovent fan assemblies are factory balanced to quality grade G6.3 (mm/sec., vel.) in accordance with ISO 1940-1973 standards. Selected values of fan RPM and corresponding total displacement (mils–peak to peak) and peak velocity (in./sec.) for quality grade G6.3 are charted below.

Fan RPM	Total Displacement (Mils-Peak-To-Peak)	Peak Velocity (In./Sec.)
3600	0.66	.124
1800	1.32	.124
1200	1.97	.124
900	2.63	.124
700	3.38	.124

Vibration measurements, when possible, should be taken at each fan shaft bearing in two planes perpendicular to the axis of rotation (planes to have 90 degree interval), and one measurement parallel to the axis of rotation. On direct drive units, the perpendicular measurements will be taken at each end of the motor casing, taking care not to take measurements on the fan shroud on TEFC motors. The axial measurement can be taken on the motor foot or mounting base. In some cases, primarily on axial flow units, it will not be possible to take measurements at the bearings or motor. On these units, the measurements should be taken on the inner shell near the bearings. If this is not possible, then take the readings on the outer shell near the bearing locations.

If vibration is excessive, shut down the fan and determine the cause.

Common Causes of Excessive Vibration:

1. Support structure not sufficiently rigid or level. Vibration amplified by resonance in ductwork or support structure.
2. V-belt drive misalignment. Belt tension is too tight or too loose.
3. Bearing locking collar or mounting bolts loose. Propeller setscrew loose.
4. Material accumulation on propeller.
5. **Centrifugal Fans:** Wheel rubbing on inlet cone.

Motors

Most integral horsepower totally-enclosed motors, fan-cooled, or fan-duty have drain plugs in the end bells for drainage of condensation. On all roof ventilators, the bottom or lower plug has been removed for continuous drainage.

All other style fans are shipped with the drain plugs installed. The user should remove the proper drain plug. For horizontally mounted units with the motor in the airstream, remove the downstream drain plug. For vertically mounted units, remove the bottom or lower drain plug.

With motors supplied by user, drain plugs may not have been provided. Check with the motor manufacturer regarding drainage and condensation.

Lubrication Instructions for Ball Bearing Motors

Grease-lubricated bearings, as furnished, are adequate for a long period of operation without relubrication. A good maintenance schedule for regreasing will vary widely depending on motor size, speed and environment.

The table listed below suggests relubrication intervals for motors on normal, steady running, light duty indoor loads in relatively clean atmosphere at 40°C (105°F) ambient temperature or less. Fractional horsepower motors follow a schedule similar to that shown under frames 143T to 215T.

TYPE OF ENCLOSURE	INSULATION	FRAME SIZE 143T–215T	254T–326T	364T–449T
Open-DP	B	2 yrs.	18 mos.	1 yr.
Enclosed-FC Open-DP	B F	18 mos.	1 yr.	9 mos.
Enclosed-NV Enclosed-FC Open-DP Enclosed-Lint Free-FC	B F H B	1 yr.	9 mos.	6 mos.
Enclosed-NV Enclosed-FC Enclosed-Lint Free-FC	F H F	9 mos.	6 mos.	3 mos.

NOTE: For motors over 1800 RPM, use ½ of tabled period. For heavy-duty, dusty locations, use ½ of tabled period. For severe-duty high vibration/shock, use ⅓ of tabled period.

VOLUME - REFERENCE TABLE

SHAFT DIAMETER (AT FACE OF BRACKET)	AMOUNT OF GREASE TO ADD
¾" To 1¼"	1/8 cu. in. or 0.1 oz.
1¼" To 1⅞"	1/4 cu. in. or 0.2 oz.
1⅞" To 2⅜"	1/4 cu. in. or 0.6 oz.
2⅜" To 3⅜"	2 cu. in. or 1.6 oz.

Motors with no provision for lubrication are equipped with sealed bearings and require no maintenance. Motors mounted in inaccessible locations are provided with extended grease lines to facilitate lubrication if provisions for lubrication are provided. The bearings are equipped with relief fittings to prevent over-lubrication. The grease lines are filled with lubricant at the factory.

Procedure for Relubrication

1. Stop motor.
2. Remove grease relief plugs in bearing housings.
3. Grease with hand gun until new grease appears at relief hole.
4. Run motor for ten (10) minutes before replacing relief plugs.

CAUTION: Do not over-lubricate. This is a major cause of bearing and motor failure. Make sure dirt and contaminants are not introduced when adding grease.

Type of Grease

Lubricate with or equivalent to the following greases:

Amoco Rykon Premium #2
Chevron BRB-2 – Standard Oil or Calif.
SRI-2 – Standard Oil Company
Alvania #2 – Shell Oil Company

For motors lubricated with special greases, check lubrication tag on motor.

Lubrication Instructions for Fan Ball Bearings

Bearings and grease lines on belt driven fans are lubricated in assembly. When lubrication is required, add grease slowly while shaft is rotating until grease comes rapidly out of seal.

For extreme conditions, lubricate according to experience. For normal conditions, lubricate the bearings with or equivalent to: Rykon Premium Grease No. 2 EP.

Bearings and grease lines on axial fans that are ordered for high moisture or above normal temperatures have been lubricated with a special lubricant, Plastilube #2. Lubricate at regular intervals with Plastilube #2 as indicated in the special lubrication chart listed below. Plastilube #2 is available from Sulflo, Inc. 1158 Erie Avenue, North Tonowanda, New York 14120.

Storage of Equipment

Fan Bearings

Since bearings tend to "breathe" on equipment stored in areas with other than a constant temperature, moisture will condense internally. Therefore, it is necessary to keep the bearings completely full of grease and periodically rotated to make certain that all internal parts are coated with grease. Even a full bearing will eventually pick up moisture and, therefore, must be periodically purged with new grease.

Grease should be purged from bearings to remove condensed moisture, and fan wheel rotated by hand every thirty (30) days. This practice should be done more often if weather is severe or if there is a wide variation in temperature.

CAUTION IN PURGING: The fan should be rotated while greasing and high pressure pneumatic greasers should be avoided. See section on "Lubricating Instructions for Fan Ball Bearings."

For rotating, follow the procedure listed below:

The blade marked number 1 should be rotated to top center. The blade number and date should be recorded in a log book which is to be stored in a protective pouch attached to the fan. During stor-

For Horizontal Shaft Installations (see Note ① for vertical shaft installations)

SHAFT SIZE (INCHES)	LUBRICATION FREQUENCY ①									
	OPERATING SPEED (RPM)									
	500	1000	1500	2000	2500	3000	3500	4000	4500	5000
	RELUBRICATION CYCLE (MONTHS)									
½ – 1	6	6	6	6	6	6	4	4	2	2
1 1/16 – 1 7/16	6	6	6	6	6	6	4	4	2	1
1½ – 1¾	6	6	6	4	4	2	2	2	1	1
1 7/8 – 2 9/16	6	6	4	4	2	2	1	1	1	
2¼ – 2 7/16	6	4	4	2	2	1	1	1		
2½ – 3	6	4	4	2	1	1	1			
3 7/16 – 3½	6	4	2	1	1	1				
3 15/16 – 4	6	4	2	1	1					

NOTES:
① Reduce this lubrication frequency schedule by half for vertical shaft installations.
② Consult manufacturer for specific recommendations.

Special Lubrication
High Temperature and High Moisture

AIRSTREAM TEMPERATURE	HOURS
TO 250°F	4500
TO 350°F	1500
TO 500°F	1000
WET ATMOSPHERE AT ROOM TEMPERATURE	1000 TO 1500

age, the fan propeller should be rotated by hand at least ten (10) revolutions every thirty (30) days to circulate the lubricant in the bearings in the motor or on the fan shaft. After the tenth revolution, stop with a blade at top center which is not the same one as is listed for the previous date in the log book.

Fans which are V-belt driven should be prepared for storage as follows.

Carefully remove the belts, coil them (without kinks) in matched sets and place them in a heavy carton. Mark carton with fan identification and store carton in a dry, well-ventilated area. Belts must not be left exposed to sunlight or subjected to storage ambient conditions exceeding 85°F, 70% relative humidity. Belts which show signs of deterioration should be replaced prior to start-up. Before reinstalling belts, review section on "Belt Tension."

NOTE: Procedures for storage of Aerovent equipment as outlined above are intended as a general guide only. Storage conditions will vary depending on the location. Common sense and practical experience should determine to what extent the above procedures will be followed.

Motors

Motors must be stored under cover in a clean, dry vibration free location. Remove sufficient packaging material to allow circulation of air around motor. Maintain the temperature of the windings a few degrees above that of the surrounding air to protect against condensation. If the motor is equipped with internal heaters, the heaters should be energized throughout the storage period to prevent this condensation. If the motor does not have internal heaters, this can be accomplished using any other safe, reliable method of heating. Measure and record monthly the ambient air temperature and winding temperature.

In the event that the motor is not equipped with internal heaters and space heating equipment is unavailable, wrap the motor as tightly as possible with heavy-duty polyethylene. Enclose bags of desiccant (such as silicagel) with the motor to minimize moisture problems. Check the desiccant regularly and replace it periodically as dictated by climate requirements.

To prevent rusting of bearing parts, the rotor must be rotated at regular intervals (30 days) to assure these parts are well covered with oil or grease.

Prior to energizing the motor, it is to be inspected and meggered by a motor manufacturer's field service engineer. The charges for this service to the customer will be in accordance with manufacturer's published service rates in effect at the time of inspection.

In addition, it is strongly recommended that the motor manufacturer be contacted for specific long-term storage instructions.

Bearing Mounting Procedure

It is important to follow the assembly and alignment procedure when making an installation of replacement bearings. Inspect the shaft for wear at the bearing mounting positions. Shaft diameter should not be undersized more than commercial ground and polished tolerances. Excessive undersizing will result in rapid wear.

1. Place new bearings on shaft loosely. Locking collars may be located on either end of bearings for ease of installation. The illustration shows one locking collar on the drive end and one locking collar on the fan end which is typical for a tubeaxial type fan. A typical SWSI centrifugal fan would have both collars mounted on the sheave side of the bearings. Drop mounting bolts in place, snug them and adjust the position of shaft with proper spacing at either end.
2. Center both ends of the shaft in the housing of tubeaxial fans using the propeller as a guide. On centrifugal fans, the shaft is positioned 90° to the scroll side with the wheel inlet centered in the scroll inlet. Use the clearance in the mounting holes for horizontal adjustment and shims, if necessary, for vertical adjustment.
3. Tighten the bearings to the base plate and check the position of the shaft again. Before tightening the locking collars, be sure the shaft and bearings are in proper alignment. The shaft should slide freely end to end.

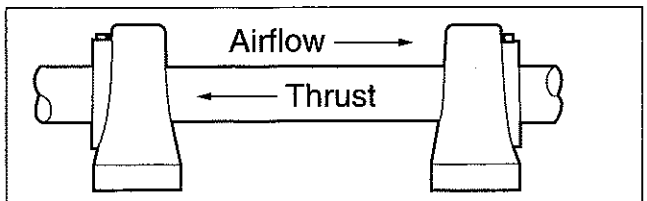

Two Bearing Drive

4. Tighten the eccentric cam locking collar of the bearing at the propeller/wheel end. (The locking collar design provides a positive lock of the wide inner ring bearing to the shaft. To tighten, turn the locking collar in the direction of shaft rotation to the lock position, then tighten the collar setscrew.) Repeat this procedure for the sheave end locking collar on DWDI and open wheel centrifugals. For other fan types, proceed to Step 5.
5. Axial flow propellers and single inlet centrifugal wheels with back plates exert an air thrust toward the fan inlet. To help balance the bearing loading, we allow the fan end bearing (belt drive units) to carry the majority of this thrust loading while the sheave end bearing carries most of the radial load. (Direct coupled units would be just the opposite.) To accomplish this, grasp the sheave end of the shaft and pull or push on it toward the fan inlet. At the same time, tap the locking collar of the sheave end bearing (fan end on direct coupled units) with a soft mallet in the opposite direction.
6. The final step is to tighten the sheave end bearing eccentric cam locking collar while maintaining constant pressure on the shaft toward the fan inlet.

For special heavy-duty bearings, a spring locking collar is used. The two knurled cup-point setscrews extend through the inner ring of the bearing and lock firmly onto the shaft. Tighten the propeller end collar first, then take hold of the sheave end of the shaft, pull and then tighten the locking collar. The locking collar is tightened by using the two setscrews mentioned above.

Replacing Belts and Bearings

Worn belts may be easily replaced without removing the fan from the system.

1. Loosen the motor hold-down bolts and move the motor toward the fan. (This is done by turning a jackscrew which is a part of the motor base on models having larger motors.) The belt may be slipped off the motor sheave and then easily removed from the sheave on the propeller shaft.
2. Check the numbers on the belt and make the replacement with a belt having the same length and section.
3. Adjust motor outward to tighten the belt (see instructions on belt tension) and tighten the motor hold-down bolts. Be sure that the motor is not cocked at an angle and that the end face of the motor sheave is parallel to the end face of the driven sheave.

Since the new belts have a tendency to stretch, it will be necessary to readjust the belt tension after a few hours of run-in.

Fan bearings may be lubricated from the outside through grease extension lines; however, if it is necessary to remove the fan bearings for cleaning or replacement, read the detailed instructions for bearing mounting procedure. Bearings are accessible through the access door in the fan. If there is no access door, then remove a section of duct from the inlet side or remove the fan entirely from the duct system.

1. On tubeaxial fans, remove the machine screws holding the bearing cover. (If the fan has a shaft seal, you must remove the propeller, lift up the drive end of the bearing cover, and push the seal forward off the end of the shaft.)
2. Bearings are held in place with ordinary Class 5 capscrews and locknuts. Use new capscrews and locknuts to make the replacement, particularly if these show signs of corrosion.
3. Before reconnecting the grease lines to new bearings, put a grease gun on the outside fittings and pump grease through the lines, making sure that all of the old grease is purged out and grease is up to the end of the line where it connects into the bearing. Be sure that you use proper grease. See "Bearing Lubrication."

The belts, sheaves, bearings, and shaftings used in all Aerovent fans are of standard dimension and manufacture. New parts are available from the factory or from the local distributor of Browning drives and Link-Belt bearings.

Belt Tension

Belt tension is very important to the proper operation of a fan and to the service life of a V-belt drive. A new fan will be received with its belts properly adjusted; however, all V-belts stretch in the first few hours of operation. It will be necessary to readjust the belt tension after eight hours of running. After 100 hours, the belts should again be adjusted. Thereafter, periodic inspection is recommended so belts may be adjusted or replaced when necessary.

1. To adjust the belts, loosen the motor hold-down bolts. Tighten the belt using the motor base adjusting screw until the belt appears to be taut. You should be able to deflect the belt slightly by squeezing the two sides between thumb and forefinger and the belt should snap back into position when released.
2. Retighten the motor hold-down bolts and start the fan. If the belt screeches on start-up, it is too loose and should be tightened further.
3. Allow the fan to run for awhile, stop the fan, and check the temperature of the sheave with your hand. If the sheave is too hot to touch, the belt is probably too tight.

V-belt drives on Aerovent fans are purposely sized to handle considerably more load than would be necessary for normal drive design. This is done to prolong the life of the drive and provide for minimum maintenance. Belts should be replaced when they have obviously become worn, even though they are still operating. A badly worn belt will also cause undue wear of the sheave. Replace belts when they show definite signs of wear; otherwise the sheaves will become worn to the point where they also must be replaced. Never put new belts on a badly worn sheave. This will reduce the capacity of the drive and cause excessive belt wear.

Most Aerovent fans are provided with an adjusting screw as a part of the motor base for easy setting of belt tension. However, small fans or fans using small horsepower motors may have only a slotted base plate. When the belt tension is adjusted by moving a motor on a slotted base, be sure to block the motor tightly and squarely before tightening the hold-down bolts, keeping the motor sheave in line with the belt. The motor sheave must be parallel to and in line with the fan sheave.

When you make replacement of belts on a multi-groove drive, be sure they are used in a matched set. If you are not sure the belts are matched, observe them in operation. The tight side should be perfectly straight and the belts should run smoothly and in line. The slack side should bow out and also be in line. If one of the belts extends out considerably farther than another, it is an indication that the belts are not matched and should be changed. If there is only a slight difference, the normal stretching in the first hours of operation will equalize the belt lengths and the belts will be well matched.

Adjusting Variable Pitch Sheaves

Many Aerovent belt driven fans are furnished with variable-pitch motor sheaves. Sheaves may be adjusted for lower fan speeds without concern of over-loading motors. When adjusting sheaves to increase fan speed, check motor current to be sure motor is not overloaded. Keep motor current within nameplate and service factor ratings.

The sheaves used are the VP type and are easily adjusted. They come in various styles, depending upon the size drive and motor shaft, all fitted with hollow head knurled point safety setscrews.

The following steps should be taken to adjust the pitch diameter.

1. Release belt tension and remove belt or belts from sheave.

2. Loosen setscrew and remove key holding adjustable half of the groove (keys used on styles 2, 3, 5 and 6 only). With styles 3 and 6, it may be necessary to remove the sheave from the shaft to remove the key.
3. Rotate adjustable half of sheave out for a smaller pitch diameter (decreased speed) or in for a larger pitch diameter (increased speed). Each one-half turn will change the pitch diameter one-tenth of an inch. Adjust two-groove sheaves the same amount on each groove. 4L or A belts will operate satisfactorily with the sheave fully closed to a maximum of five full turns open. 5L or B belts will operate satisfactorily with the sheave one full turn open to a maximum of six full turns open. (This will insure full contact of the sheave in the groove.)
4. Replace the key and tighten setscrew to lock sheave half in position.
5. Replace the belts and tighten to proper tension. If extreme amount of adjustment has been made, it may be necessary to replace belts with another length.

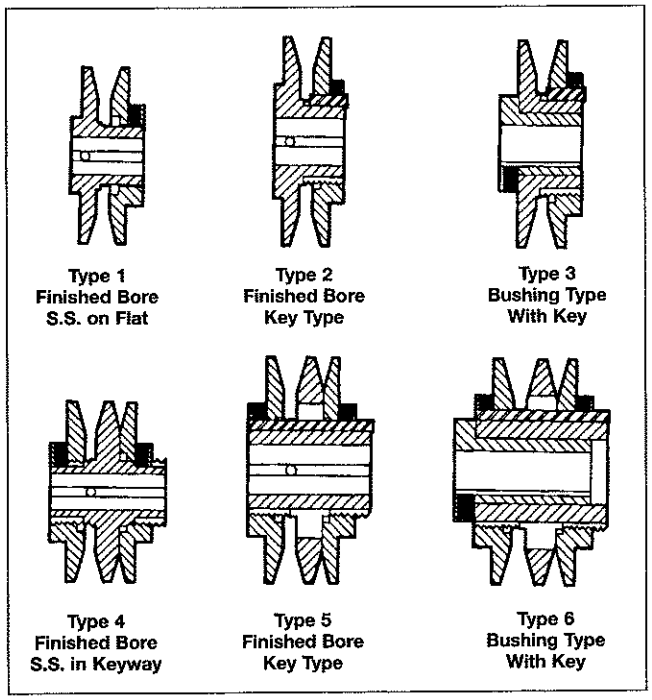

NOTE: Heavy-duty drives requiring three-groove sheaves, motor sheaves larger than 7" pitch diameter, or belts larger than B section require MVP sheaves and are available only on special order.

Typical Motor Current and Starter Size

Amperes shown are nominal and were used for sizing of the starters only. These values are **not** to be used for sizing heaters or other overload protection. Consult the motor nameplate for the correct motor current and refer this to the heater size chart for the particular starters used.

NOTE: When sizing overload heaters, conditions under which the starters will operate must be considered. Enclosed starters should have heaters one size larger than open starters. Where enclosures are subjected to external heat, such as radiant heat from the sun or heat accumulation under a roof, it may be necessary to increase the size even more. Experience with the operating conditions and measurement of the actual line current will aid in proper sizing of heaters.

Installation Instructions for Propellers Equipped with Browning Malleable Iron Split Taper Bushings

Many Aerovent fans are furnished with split taper bushings for mounting the propeller to the shaft. When properly assembled, the bushings grip the hub with positive clamping action.

1. Bushing barrel and bore of propeller are tapered. This assures concentric mounting and a true running propeller.
2. Capscrews, when tightened, lock bushing in propeller. Use special plated capscrews threaded full length furnished by TCF Aerovent.
3. Bushing is split so that when the locking capscrews force bushing into tapered bore, the bushing grips the shaft with a positive clamping fit. This will withstand vibration and punishing loads without being loosened.

HP	THREE PHASE						SINGLE PHASE			
	230V		460V		575V		115V		230V	
	AMPS	STARTER	AMPS	STARTER	AMPS	STARTER	AMPS	STARTER	AMPS	STARTER
¼		00		00		00	5.8	00	2.9	00
⅓	1.7	00	0.9	00		00	7.2	00	3.6	00
½	2.0	00	1.0	00	0.8	00	9.8	0	4.9	00
¾	2.8	00	1.4	00	1.1	00	13.6	0	6.9	00
1	3.5	00	1.8	00	1.4	00	16.0	0	8.0	00
1½	5.0	00	2.5	00	2.0	00	20.0	1	10.0	0
2	6.5	0	3.3	00	2.6	00	24.0	1	12.0	0
3	9.0	0	4.5	0	4.0	0	34.0	1	17.0	1
5	15.0	1	7.5	0	6.0	0			28.0	1
7½	22.0	1	11.0	1	9.0	1			40.0	2
10	27.0	2	14.0	1	11.0	1			50.0	3
15	40.0	2	20.0	2	16.0	2				
20	52.0	3	26.0	2	21.0	2				
25	64.0	3	32.0	2	26.0	2				

For larger motor sizes, refer to National Electric Code.

BUSHING NO.	DIAMETER	LENGTH (IN.)	TORQUE FT. LBS.
H	¼-20	1¼	7½
P-1	5/16-18	1½	13
P-2	5/16-18	1¾	13
Q-2	⅜-16	2½	24
R-2	⅜-16	3	24

4. Propeller and bushing assembly is keyed to the shaft and held in place by compression. This gives added driving strength.

   Before assembly, be sure shaft and keyway are clean and smooth. Check key size with both shaft and bushing keyways.

5. To assemble, put the capscrews through the clearance holes in the bushing and put bushing loosely into propeller. Do not press or drive. Start capscrews by hand, turning them just enough to engage threads in tapped holes on propeller. Do not use a wrench at this time. The bushing should be loose enough in the propeller to move slightly. Slide propeller and bushing assembly onto shaft, making allowance for end play of shaft to prevent rubbing. Install key into keyway. Do not force propeller and bushing onto shaft. If it does not go on easily, check shaft, bushing and key sizes once again.

Tighten capscrews progressively with wrench. Do this evenly as in mounting an automobile wheel. Tighten each capscrew part of a turn successively until all are tight. These capscrews force the taper bushing into the hub which in turn compresses the bushing onto the shaft. This makes a positive clamping fit. The torque must not exceed that shown in the above table.

WARNING: Do not attempt to pull bushing flange flush with hub end. There should be a clearance which varies approximately 3/16" to ¼" with the bushing size when tightened. (Note, this is not a locating dimension.)

Removing Propeller Assembly from Shaft

1. Remove all capscrews from propeller and hub assembly.
2. Start capscrews into the threaded holes into the bushing flange.
3. Tighten each bolt part of a turn successively to force the propeller off the bushing. This forces the bushing loose from the propeller and releases the compression so that the entire assembly will slide from the shaft.
4. Pull the bushing off the shaft. If the assembly has been in place some time, it may be necessary to use a wheel puller to remove the bushing. Never use a wheel puller on the propeller.

For Propellers Not Using Taper Bushing, Consult Specific Product Installation Manual

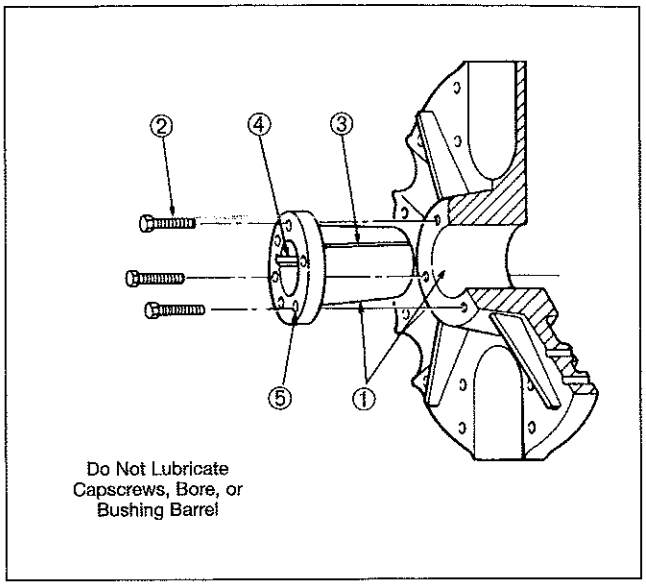

General Storage of Equipment

If a fan is not installed immediately upon receipt, it is the responsibility of the purchaser/user to see to it that proper procedures are followed to minimize deterioration which may result from idle storage. These simple steps should be adhered to in order to protect the equipment.

1. Machined parts that are exposed to the elements should be covered with a protective coating of grease (Chesterton Heavy Duty Rustguard #740, Sprayon #322 or equivalent).

   For fans equipped with access panels, vane section access panels or core end covers, these can be removed to gain adequate access to the interior. These panels/covers should be reattached for storage but fastened with a minimum of assembly hardware to facilitate access. The remaining hardware should be bagged and attached to the fan to prevent loss of these items along with a tag indicating that all hardware should be reinstalled prior to putting the fan into service.

2. Equipment must be protected from construction debris. Ideally, equipment should be stored in a dry, well-sheltered, vibration-free location.
3. Each propeller blade should be numbered in sequence with a felt-tipped market.
4. A plastic cover should be spread over the equipment.

TCF Aerovent Company

5959 Trenton Lane ▪ Minneapolis, MN 55442-3238
Phone: (612) 551-7500 ▪ Fax: (612) 551-7501

DAKOTA INTERTEK CORP.
D/B/A DAKOTA ENVIRONMENTAL

16600 West National Avenue
New Berlin, WI 53151
Phone: (262)784-8844 Fax: (262)784-8833

Facsimile Transmission Cover

To: Earth Tech

Date: 1/13/99
Time:

Attention: Don Pirrung

Phone Number: 520 451-2822

Fax Number: 920-458 0550

From: John Bruskewitz

Subject: Dayne Park Orifice Plate

Urgent _____ Respond ASAP _____ For Your Info _____ Total Pages Incl. Cover _____

REMARKS:

Don
Here is the drawing for the Orifice at Dayne Park. Call if you have Question. My mobile for next couple day is 406 8318.
John

WE APPRECIATE YOUR BUSINESS!

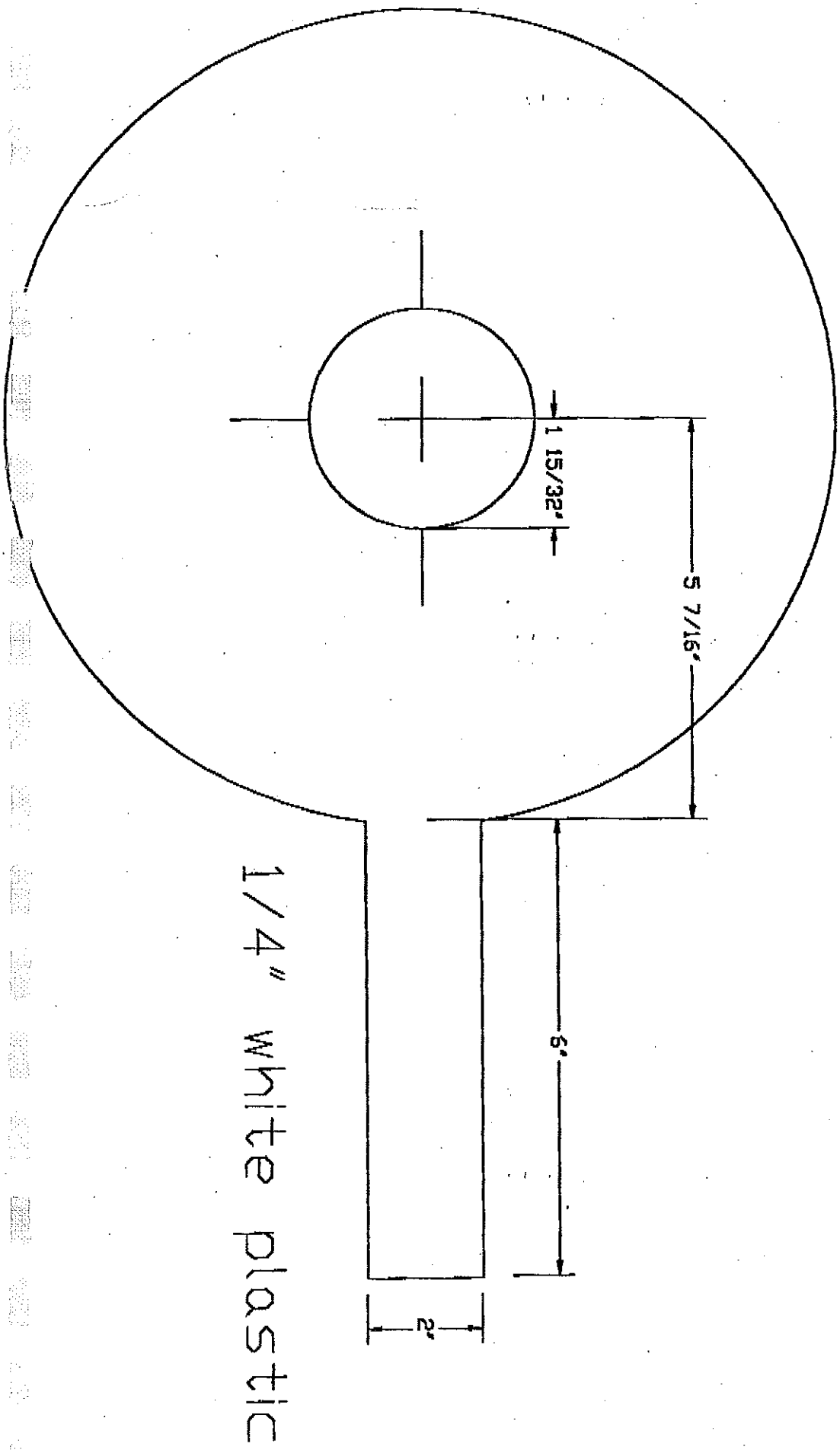

1/4" white plastic

APPENDIX C

MANUFACTURER'S INSTRUCTIONS FOR DIALER

GUARDIT™

Owner's Manual

SINCE 1948

RACO®

REMOTE ALARMS AND CONTROLS

Warranty

Raco Manufacturing and Engineering Co. Inc., warrants this product to be in good working order for a period of two years from the date of purchase as a new product. In the event of failure of any part(s) (excluding batteries), due to defect in material or workmanship occurring within that two year period, Raco will, at it's option repair or replace the product at no charge for parts or labor. All billable repairs after the two year period will carry a ninety day warranty. Any alteration of the product without instruction from Raco's Engineering Department will automatically void this warranty. If alterations of the unit are authorized by Raco, please complete the authorization form in the Owners Manual and return the form to Raco to ensure the warranty. Under no circumstances will Raco be responsible for consequential or secondary damages.

The defective product should be returned, insured and freight prepaid, securely packaged to the address listed below. Please call Customer Support at 800 449-4539 for a Return Authorization Number. Customer Support will be available from 8:00 a.m. to 4:30 p.m. (PST), Monday through Friday (excluding holidays). When you call Customer Support with a technical problem or to request a Return Authorization number please have the products serial number and a detailed description of the problem you are experiencing.

Raco Manufacturing and Engineering Co. Inc.
Customer Support
1400 62nd Street
Emeryville, California 94608

Copyright

© Raco Manufacturing and Engineering Co., 1996. All rights reserved. No part of this manual may be reproduced, stored in a retrieval system, or transmitted in any way including, but not limited to photocopy, photograph, or electronic media without the written permission of Raco Manufacturing and Engineering Co.

Disclaimer

Every effort has been made to ensure the accuracy of this document. However, Raco Manufacturing and Engineering Co. assumes no responsibility for its use or any third party action as that may result from its use.

Trademarks

Guard-It™ is a trademark of Raco Manufacturing & Engineering, Co.
RACO is a registered trademark of Raco Manufacturing & Engineering, Co.

Printing History

Printed in USA, July 1996
Raco Manufacturing & Engineering, Co.
1400 62nd Street, Emeryville, CA 94608
(510) 658-6713
1-800-722-6999
FAX # 1-510-658-3153

FCC Requirements

1. The Federal Communications Commission (FCC) has established Rules which permit this device to be directly connected to the telephone network. Standardized jacks are used for these connections. This equipment should not be used on party lines or coin phones.

2. If this device is malfunctioning, it may also be causing harm to the telephone network; this device should be disconnected until the source of the problem can be determined and until repair has been made. If this is not done, the telephone company may temporarily disconnect service.

3. The telephone company may make changes in its technical operations and procedures; if such changes affect the compatibility or use of this device, the telephone company is required to give adequate notice of the changes. You will be advised of your right to file a complaint with the FCC.

4. If the telephone company requests information on what equipment is connected to their lines, inform them of:

a. The telephone number to which this unit is connected.
b. The ringer equivalence number. [0.8B]
c. The USOC jack required. [RJ11C]
d. The FCC Registration Number. [EMRUSA-30496-AL-E]

Items (b) and (d) are indicated on the label. The Ringer Equivalence Number (REN) is used to determine how many devices can be connected to your telephone line. In most areas, the sum of REN's of all devices on any one line should no exceed five (5.0). If too many devices are attached, they may not ring properly.

Service Requirements

In the event of equipment malfunction, all repairs should be performed by our Company or an authorized agent. It is the responsibility of users requiring service to report the need for service to our Company or to one of our authorized agents. Service can be obtained at **Raco Manufacturing & Engineering Company, 1400 62nd Street, Emeryville, California, 94608; (510) 658-6713.**

TABLE OF CONTENTS

1 PRODUCT OVERVIEW 3

2 INSTALLATION 5
- 2.1 Mounting Location 5
- 2.2 Mounting Onto A Back Surface 5
- 2.3 Mounting Flush Into A Front Panel 5
- 2.4 Mounting Without An Enclosure 5
- 2.5 Mounting With Cellularm™ Option 5

3 WIRING CONNECTIONS 6
- 3.1 Power Connections 6
- 3.2 Connecting To Electrical Ground 6
- 3.3 Phone Line Connection 6
- 3.4 Input Signal Connections 6
- 3.5 Connecting Unpowered ("DRY") Contact Inputs 7
- 3.6 Connecting Analog or Digital Logic Signal Inputs 7
- 3.7 Optional Digital Alarm Output (DAO) Connections 7
- 3.8 Optional External Battery Connections 7
- 3.9 Writing Channel Descriptions In White Bar Areas 7

4 PROGRAMMING YOUR GUARD-IT™ AUTODIALER 8
- 4.1 Programming Menu 9
  - [1] Input Configuration 9
  - [2] Phone Number Programming 9
  - [3] Recording Voice Messages 10
  - [4] General Programming Items 11
    - [1] ALARM TRIP DELAY 11
    - [2] ALARM RESET TIME 12
    - [3] ANSWER DELAY 12
    - [4] TIME BETWEEN ALARM CALLS 13
    - [5] DIALING DELAY 13
    - [6] TONE/PULSE DIALING 13
    - [7] PHONE FAULT MONITOR 13
    - [8] CALL PROGRESS MONITOR 14
  - [5] Status Report (Input Review) 15
  - [6] Programming Review 15
  - [7] Acknowledged Alarm Reset 15
- 4.2 Restoring Programming To Factory Default Settings 15
  - 4.2.1 Table of Default Programming Values 16

5 THE GUARD-IT™ AUTODIALER IN OPERATION 17
5.1 The Alarm Process 17
5.2 Receiving And Acknowledging An Alarm Call 18
5.3 Power Failure Alarms 19
5.4 Placing An Inquiry Call To The Guard-it™ Autodialer 19
5.5 Acknowledging An Alarm From The Front Panel 19
5.6 Clearing An Acknowledged Alarm From The Front Panel 19

6 TROUBLESHOOTING 20

Appendix A: ANALOG (4-20 MA) INPUTS 21
A.1 Connecting 4-20 MA Analog Signal Inputs 21
A.2 Programming For Analog Signal Inputs 22
A.3 Analog Translation Table 23

Appendix B: CONNECTING DIGITAL LOGIC SIGNAL INPUTS 24

Appendix C: DIGITAL ALARM OUTPUT (DAO) 25

Appendix D: OPTIONAL EXTERNAL GEL CELL BACKUP BATTERY 26

Appendix E: PROGRAMMING FOR USE WITH NUMERIC PAGERS 27

GUARD-IT™ AUTODIALER OWNER'S MANUAL

Revision "A"

1 PRODUCT OVERVIEW

The Guard-it™ autodialer is designed to monitor critical conditions at remote facilities and place alarm notification telephone calls to personnel, delivering specific pre-recorded messages.

Users may also call the product at any time from any telephone, to check for alarm conditions.

Four signal inputs are provided for monitoring. The signals which the user connects to these four inputs may be any combination of contact closure, digital logic level, or analog 4-20 ma current loop. In addition, the product monitors the 12 volt DC power connected to it, and if an optional rechargeable battery has been installed, it will place alarm calls to report the power failure.

The product will work with any standard dial-up public telephone line, as well as with the available Cellularm™ option. Leased lines are not required.

Using a programming phone at the front panel. the user may pre-record informative, high-fidelity voice messages up to 12 seconds in length, for each of the four input channels, plus a station identification message which is played during every phone call.

The user may program up to 8 phone numbers, which may be up to 60 digits in length. The product may also be programmed to call numerical display pagers in addition to regular phone numbers.

If desired, the user may program a number of detail parameters such as alarm trip delays, ring answer delays, etc.

A special Call Progress function may be turned on, which allows the product to detect busy signals and move automatically to the next programmed phone number, delay the voice reporting until the called phone has answered, and move to the next phone number if a programmable maximum number of rings has been exceeded.

A phone line fault monitor function may also be turned on, which detects the disconnection or failure of the phone line.

Informative, multi-color front panel LED's advise local personnel at a glance of any problems.

The product may be mounted on a back surface, or flush into a larger front panel, or as a stand-alone circuit board.

The Guard-it™ autodialer is ruggedly built to a high standard of quality by the world leader in industrial alarm autodialers. It includes internal noise filters and surge protection on all signal, power and phone line inputs, and is built for many years of reliable service.

2 INSTALLATION

2.1 Mounting Location

Ideally, the Guard-it™ autodialer and the wiring connected to it should be located away from heavy duty power wiring and wiring which is likely to emit substantial electrical interference.. The location must be free of condensing moisture, and must remain within a temperature range of 20 to 120 degrees F for proper operation. Allow clearance room for the plug-on connector block and phone line connectors at the bottom.

The product should be located within 5 feet of an RJ11 telephone line jack, otherwise a telephone extension cord will be needed to make the phone line connection.

If you are using the optional 12 VDC wall adaptor to power the product, you will need a 120 VAC electrical outlet to plug the adaptor into. The product should be located within five feet of this outlet, otherwise it may be necessary to splice in additional wire length for the 12 VDC line.

2.2 Mounting Onto A Back Surface

Referring to the diagram, attach the mounting brackets to the product. Prepare the back surface by drilling pilot or clearance holes for the mounting screws. The mounting centers are 3.6" wide by 9" wide. #10 Wood screws, self tapping screws and machine screws (with lock washers and nuts) are provided to accommodate a variety of back panel materials.

2.3 Mounting Flush Into A Front Panel

To mount the product flush into a larger front panel (maximum panel thickness 1/8"), you will need a rectangular cutout in the panel to clear 6-3/16" high by 8-3/16" wide. Slide the product into the opening from the front, and use the 6-32 screws to attach the two mounting brackets to the product in the proper orientation so that they hold the product firmly in place against the larger front panel. Refer to the diagram.

2.4 Mounting Without An Enclosure

To mount the product as a circuit board only, open the enclosure via the two screws on each side of the enclosure, lift out the front panel, and then remove the four screws which secure the circuit board to the front panel. Pass appropriate mounting screws (not provided with product) through the white nylon standoffs to mount the circuit board to a back surface. The small inner panel is printed with markings to identify the LED's and switch functions.

2.5 Mounting With Cellularm™ Option

If your Guard-it™ autodialer was ordered with the Cellularm™ (cellular wireless) option, the product comes pre-mounted in the Cellularm™ enclosure. Follow the mounting instructions provided for the Cellularm™ option.

Basic Wiring Connection Diagram

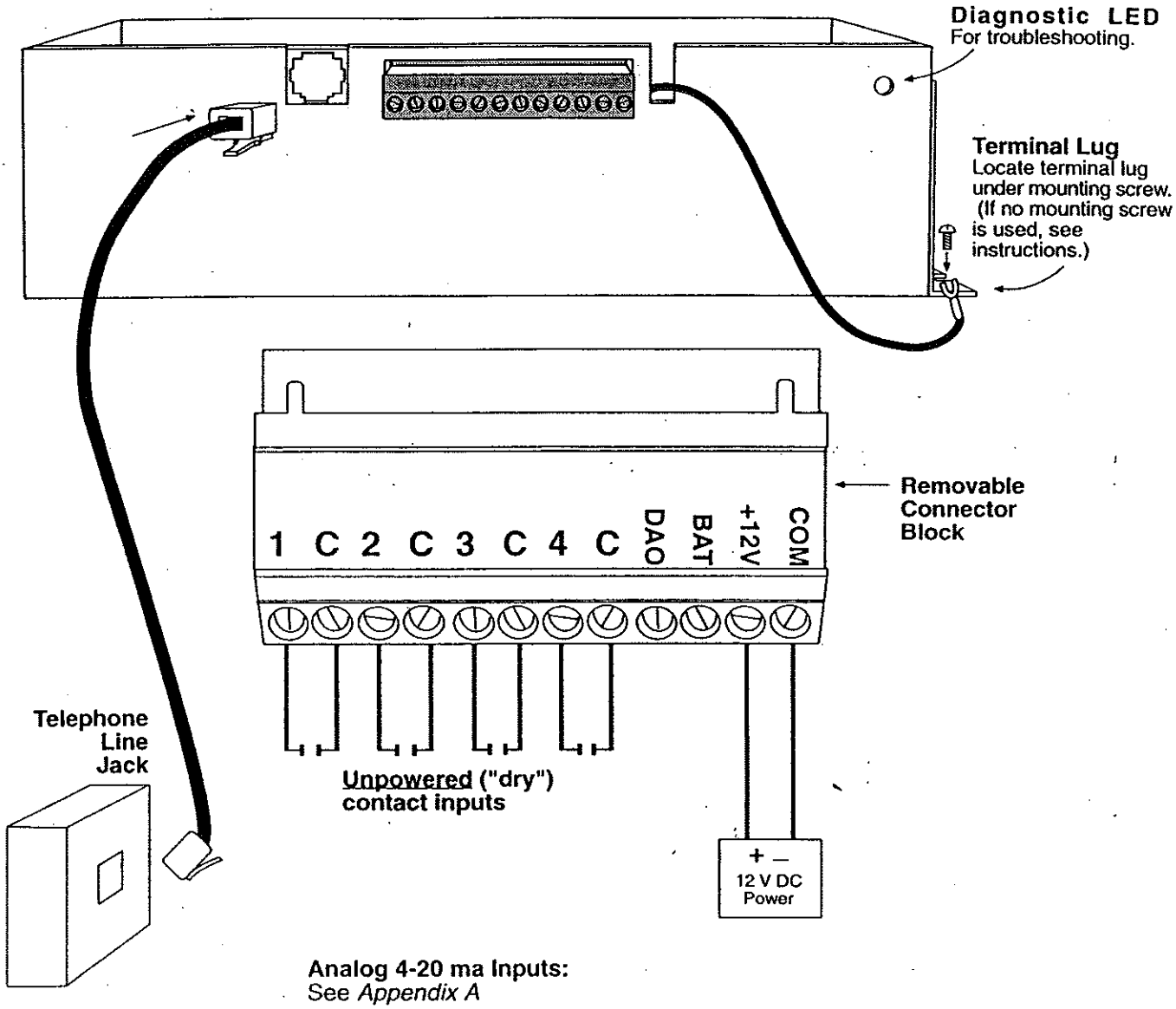

Analog 4-20 ma Inputs:
See *Appendix A*

Digital Logic Inputs:
See *Appendix B*

Digital Alarm Output (DAO):
See *Appendix C*

Optional External Battery:
See *Appendix D*

3 WIRING CONNECTIONS

Note that the connector block is unpluggable for convenience in making wiring connections.

3.1 Power Connections

The Guard-it™ autodialer requires 8 to 14 VDC power connected to the connector block, in order to operate.

The power source should be capable of delivering a current of 500 milliamperes.

Power must be connected observing the correct polarity. Refer to the diagram.

3.2 Connecting To Electrical Ground

Your Guard-it™ autodialer has several internal protective devices built in. However, for them to work effectively it is important that the product be well grounded. A grounding wire with a terminal lug is included on the product for this purpose.

If the Product is mounted to a grounded metal back surface, then simply connect the terminal end of the wire to the lower right hand mounting screw as shown in the diagram.

If the product is <u>not</u> mounted to a grounded metal back surface, connect the end of the wire to the nearest available electrical grounding point. If the installation is within a grounded metal electrical panel or enclosure, connecting to the metalwork will be sufficient. If you need to extend the ground wire, use 18 gauge wire or heavier, and keep the total length as short as possible.

This grounding wire will also ground the (-) side of the incoming 12 VDC power. If you are using a pre-existing source of 12 VDC power, you will need to verify that the grounding of the (-) side of this supply will not cause a problem.

3.3 Phone Line Connection

Plug one end of the supplied telephone extension cord into the telephone line jack located to the left of the connector block (<u>not</u> the programming jack located on the front panel). Plug the other end of this same cable into a telephone line (RJ11) jack. Note that the phone line must be such that a standard telephone set can work on it. *Certain in-house PABX phone systems have "digital" line connections which can damage the product!*

Ideally this phone line should be for the exclusive use of the Guard-it™ autodialer. However the product will generally function if there is an extension phone on the same line, as long as that extension phone is not in use when it is time for the Guard-it™ is to place or receive a phone call.

3.4 Input Signal Connections

The four signal inputs on the Product can be used with several different types of input signal, in any combination.

3.5 Connecting Unpowered ("DRY") Contact Inputs

Connect unpowered contact inputs as shown in the diagram. Each input has two input connection points. The points marked "C" are internally connected together and to common ground.

Before making any such connections, verify that there is no electrical power present on the signal wires, otherwise serious damage to the product could result.

3.6 Connecting Analog or Digital Logic Signal Inputs

Refer to Appendix A regarding analog signal inputs and Appendix B regarding digital logic signal inputs.

3.7 Optional Digital Alarm Output (DAO) Connections

The digital alarm output circuit activates whenever there is an unacknowledged alarm. It deactivates whenever such alarms are acknowledged. It may be used to power a customer supplied 12 VDC relay, or to drive a 5 volt logic circuit. See appendix C for details.

3.8 Optional External Battery Connections

The Product may be used with a customer-supplied external 6 VDC (not 12 VDC!) gel cell lead acid battery for backup during power failure. An internally mounted gel cell battery is also an available as an option from Raco. Refer to appendix D if using an external gel cell battery.

3.9 Writing Channel Descriptions In White Bar Areas

You may want to use the white bar area to the right of each of the four input channel status LED's, to write in short descriptions of what each input channel is being used to monitor. You may use a plain lead pencil (which is erasable), or a marker pen.

Flashing red indicates loss of external 12 VDC power. After 5 minutes, alarm calls will be placed. Upon acknowledgement, light is on with no flashing

Flashes red whenever unit is on but disarmed

Flashes red if Phone Fault Detection is turned on and a phone line fault has been detected

Indicates a phone call is in progress.

Microphone

Channel Light Indications:

Steady green - Normal

Flashing green - Fault but alarm trip delay not timed out

Flashing red - Unacknowledged alarm.

Steady red - Acknowledged alarm.

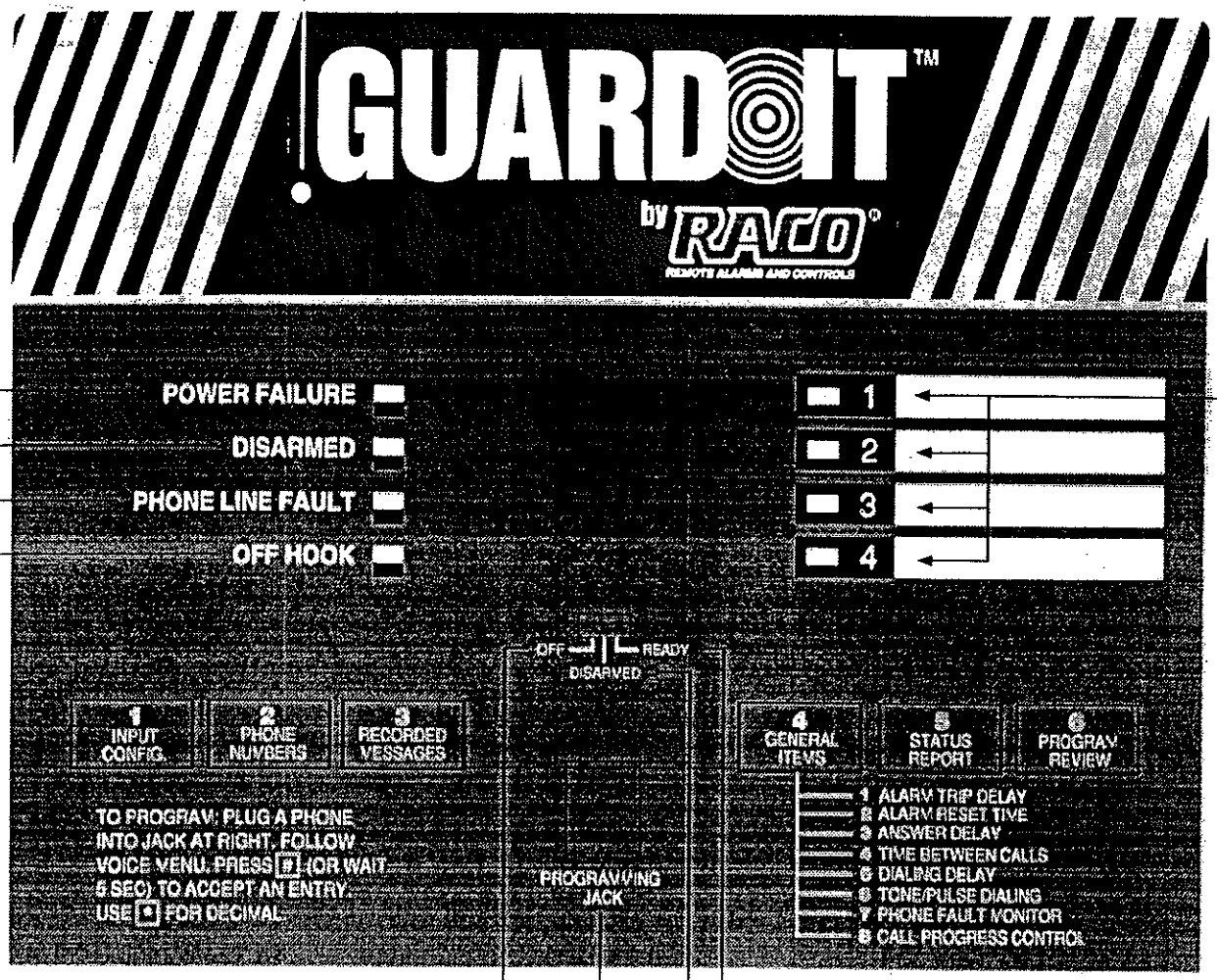

Product is not powered but optional battery is kept charged.

Product is ready to place alarm calls.

Product may be called but will not place alarm calls; any alarms are automatically acknowledged.

Plug a touch tone phone into this jack and follow the voice menu to program. This jack is *not* for connection to the telephone company line

4 PROGRAMMING YOUR GUARD-IT™ AUTODIALER

To program your Guard-it™ autodialer, you will need a standard touch tone(r) telephone.
Telephones which have the keypad located separately from the handset, are most convenient for this purpose.

Just plug the telephone temporarily into the Programming Jack on the front panel of the product, lift the receiver, and follow the handy voice menu to enter your programming and record your voice messages.

If you do not make any selection from the "top" menu, it will be repeated once and then the program mode will be terminated.

To begin again, simply hang up the programming phone for a second or so, and then pick it up again. You may do this from most places in the programming menu, whenever you want a fresh start.

For most programming items, you will hear the present programming entry if any, and then you will be given a chance to either accept this existing entry by pressing pound (#), or else make a new entry.

If you make a new entry, it will be repeated back to you for confirmation.

In general, pressing the pound (#) key will cause whatever you have keyed in to be accepted and recited back for confirmation.

When keying in a menu choice rather than a value, the choice will be accepted and recited without need to press pound (#).

Pressing the pound (#) key when you have not keyed in any entry, will generally return you to the previous menu level.

If you make an entry that the Product considers invalid, it will respond with a statement "Value fault. Enter a new value." The previous valid setting will be retained and restated, and then you will be prompted to make a new entry if you wish to do so. This would occur, for example, if you entered a value that was outside the allowable range of values for that programming item.

Refer to the table later in this section, for a listing of the initial default values and allowable range of values which you can program, for each programming item.

Note that if you delay more than five seconds without pressing any new key, the Product will treat this the same as pressing the pound (#) key, except when recording messages.

Also note that Your Guard-it™ autodialer will not respond to new alarm conditions while you are programming. The LED's will generally remain in the state they were in prior to the beginning of the programming session, until a few seconds after the programming

session has ended. In general, most program changes do not take effect until you end the programming session. The same is true during an alarm call; messages for new alarms are not included in a call that is already underway.

4.1 Programming Menu

[1] Input Configuration
The default input configuration for each of the four input channels is *contact input, alarming on closed circuit.*

If you need a different configuration, after selecting [1] from the top menu, you must select which of the four available input channels (first, second, etc.) you want to configure. The voice menu will ask you for this number which will be a number from 1 to 4.

After you select the input channel number to configure, the voice menu will prompt you with the following choices:

[1] Alarm on Open Circuit

[2] Alarm on Closed Circuit (which is the default setting)

[3] Off (so that this input channel will not report or activate its corresponding front panel LED)

[4] Analog (4-20 ma current loop) signal.

If an input channel is configured for an analog signal, the menu also gives you two additional choices:

[5] To program an analog high alarm level set point value

[6] To program an analog low alarm level set point value

EXAMPLE: to configure input channel 3 to alarm on Open Circuit, from the top menu press:

1 3 1

Refer to Appendix A for additional information on programming for analog signal inputs.

[2] Phone Number Programming

You must program at least one phone number for your Guard-it™ autodialer to dial when it has an alarm to report.

Until you do so, any alarms which are detected will be automatically acknowledged without any alarm calls being placed.

To program phone numbers, you must first select which of 8 available phone numbers (first, second, etc.) you want to program. The voice menu will ask you for this number, which will be a number from 1 to 8. Then it will recite the presently programmed phone number for that selection, if any. Then it will allow you to accept the current entry by pressing pound (#), or else enter a new phone number for that selection.

Be sure to include any necessary prefixes or area codes, just as you would dial it on an ordinary telephone.

As you enter each digit, be sure to listen for the voice to repeat back that digit, before you enter the next digit.

EXAMPLE: To program the third phone number to be 1 (510) 658-6713, from the top menu you would press [2] for phone number programming, then [3] to select the third phone number, then

1 5 1 0 6 5 8 6 7 1 3 #

Listen carefully as the completed entry is repeated back to you, to be sure it was entered and accepted correctly.

To delete a phone number, program it to be 00.

For example, to clear out the fourth phone number, from the top menu you would press [2] for phone number programming, then [4] to select the fourth phone number, then

0 0 #.

To program a phone number for use with numeric pagers, see Appendix E.

[3] Recording Voice Messages

Your Guard-it™ autodialer has "canned" generic alarm messages ("Channel one alarm", etc.) but you will probably want to record your own more specific and informative alarm messages.

There are five alarm messages which you can record: a message for each of the four input channels, plus a "Station ID" message which identifies the site where the Product is located.

In order to prevent one message from being recorded or re-recorded over another message, *it is necessary to record all five messages, in proper order, in one sequence of steps.*

Under the Message Review and Recording menu which you get by pressing [3] from the top menu, you will be prompted to choose

[1] to review the existing set of five messages, or

[2] to begin the sequence of recording all five messages.

If you select [2] to begin the recording sequence, the Guard-it™ autodialer moves you automatically through the sequence of all five messages to record, starting with the message for input channel number one.

The voice menu identifies which message is to be recorded next, (i.e. for input channel number 1, for input channel number 2, etc.).

To actually record the message, wait for the sound of the beep, then speak clearly into the telephone mouthpiece of the programming phone. When you are done, press pound (#). The Product will then play back the message you have just recorded.

If you want to re-record the resulting message after hearing it played back, press star (*) instead of pound (#). You may re-record as many times as you wish, until you are satisfied with a given message. When you are satisfied with the message, press pound (#) to move on to the next message.

Proceed in this manner to record *all five messages*. The Station ID message is the last message in the set of five messages. It is the message that will be recited during every phone call, to identify the site that is calling or being called.

If you have configured a given input channel as "OFF", you will still be asked to record a message for it. Just "record" a moment of silence for that departed input channel, and proceed with recording the remaining messages.

For any input channels which you have programmed for analog signal input, record the message in the form of: "The water level percentage is". Whenever you call in or when an alarm call is placed, analog channels will be reported with the message you record followed immediately by the percentage value. You may want to include a reference to the translation table which is found in Appendix A.

If you later need to change a message, simply re-record the entire set of 5 messages.

Each message may be as long as 12 seconds, for an available total of 60 seconds.

[4] General Programming Items

The following general programming items allow you to "custom tailor" some specialized aspects of product operation.

Many users will find that the default settings work well, without need to program any of the items in this general category.

[1] ALARM TRIP DELAY 2 sec

The alarm trip delay is the number of seconds during which the alarm violation (fault) must be continuously present on any input channel, before the Product will trip that input channel into Unacknowledged Alarm condition and begin dialing the first programmed phone number.

The default value is two seconds. If you wish to alter this value, the range of programmable values is 0.1 to 999.9 seconds. Use the star (*) key if you want to use a decimal point, but it is also OK to use whole numbers.

During the time period when a fault exists but has not yet lasted long enough to trip an alarm, the LED for that input channel will change from green to flashing green. Also during this interval, if you should hear a spoken status report on this channel, it will say "Input Channel (X) Fault."

Note that the Product also has an internal power failure alarm. The trip delay for this alarm is fixed at 5 minutes.

[2] ALARM RESET TIME 1.0 Hr

In the Unacknowledged Alarm state, the Product will place alarm calls, going endlessly through the list of up to 8 programmed phone numbers until the alarm is acknowledged by someone pressing a "9" at the sound of the tone, or by placing a return call to the Product and pressing "9" at the sound of the tone.

Either way, when the alarm is acknowledged, further alarm calls on behalf of that input channel (or power failure alarm) will be suspended. An internal Alarm Reset Timer begins timing, and when it has completely timed out, the acknowledged alarm status for that input channel is automatically cleared. As a result, if there is no current alarm condition, no new alarm will be created. If an alarm condition does still exist, then after the alarm trip delay expires, a new Unacknowledged Alarm and alarm calling will occur.

The default value for the Alarm Reset Time is one hour. If you wish to alter this value, the range of programmable values is 0.1 to 99.9 hours. Use the star (*) key if you want to use a decimal point, but it is also OK to use whole numbers.

Note that when testing, once you trip an alarm on a given input channel and acknowledge the alarm, you will not be able to promptly re-create an Unacknowledged Alarm for that input channel, since the Alarm Reset Timer will not have timed out, and this input channel will still be in an Acknowledged Alarm state. To create a new alarm, you can trip an alarm on another input, or you can force a clearout of all Alarm Reset Timers by using selection [7] on the top menu, or by turning the product off and then on again.

[3] ANSWER DELAY 1 ring

When you place a call to the Product, it will wait for a programmed number of rings before answering the call. This number of rings is called the Answer Delay.

The default value is one ring. If you wish to alter this value, the range of programmable values is 1 to 20 rings.

A NOTE ABOUT EXTENSION PHONES:
The best practice is to provide a phone line service for the exclusive use of the Guard-it™ autodialer. However if you do need to have an extension phone on the same line for use by personnel, you might want to program a ring delay of, say, 6 rings, so that

anyone present at the site would have a chance to answer the call before the Guard-it™ autodialer answers it. If the line is in use by an extension phone when the Guard-it™ tries to place an alarm call, the call will not be completed, but the messages will be heard on the extension phone.

1.0 min [4] TIME BETWEEN ALARM CALLS

After the Product is finished placing a call to a given phone number, and if the alarm was not acknowledged during that call, the Product enters a waiting period before it begins placing the next alarm call. This waiting period is the Time Between Alarm Calls.

The default value is 2.0 minutes. If you wish to alter this value, the range of programmable values is 0.1 to 99.9 minutes.

10.0 sec [5] DIALING DELAY

If you want your Guard-it™ autodialer to place alarm calls to a numerical pager, you will need to refer to Appendix D for special instructions, which include programming the special Dialing Delay.

The default value is 10 seconds. If you wish to alter this value, the range of programmable values is 1 to 20 seconds.

[6] TONE/PULSE DIALING

Your Guard-it™ autodialer is capable of dialing using Pulse Dialing or Tone Dialing.

For Tone Dialing, press [1]

For Pulse Dialing, press [2].

✓ For "Auto Detect", press [3]. This is the default setting.

When Auto-Detect is chosen, the Product will periodically test the phone line and it will automatically use Tone Dialing if it determines that Tone Dialing works on the phone service line it is connected to.

off [7] PHONE FAULT MONITOR

Occasionally a telephone line will cease to operate. When the Phone Fault Monitor function is turned on, the Product will go "off hook" when it is turned on, and periodically thereafter, to check for the presence of a dial tone. If it fails to hear a dial tone, it begins flashing the "PHONE LINE FAULT" LED on the front panel, and continues to do so until such later time as it again hears a dial tone during another periodic check. Also, if someone hears a report by calling or programming the product, the words "phone line fault" will be included.

This action of going off hook every few minutes (as indicated by the yellow light on the front panel) may make it seem like the product is behaving erratically, to someone who is not familiar with its functioning.

This means that if there is a change in the status of the phone line connection, *it will take a few minutes for the LED to reflect the change.*

Note that if this feature is turned on and there is another phone device connected to the Guard-it™ autodialer's phone line, if that device happens to be "off hook" (in use) when the product checks the phone line, a phone line fault indication may occur.

Even if the product has detected an apparent phone line fault, if it needs to place an alarm call it will attempt to do so. Thus in some circumstances you may receive an alarm call which includes the warning "phone line fault". This generally would mean that a phone extension was in use at last check, or that the phone line is intermittent.

The default setting for this feature is "Off". To turn it on, when prompted press [2].

[8] CALL PROGRESS MONITOR

The Guard-it™ autodialer can be programmed to monitor the progress of the alarm calls it places, by listening to the tones and voice signals on the phone line.

When this feature is turned on, in placing alarm calls it listens for the sound of rings, and only begins speaking when it misses the sound of the next ring. For this reason, there may be a delay of a few seconds after picking up the phone, before the first message is heard, when this function is turned on.

Also when this feature is turned on, the product counts the number of rings, and if more than the programmed maximum number of rings occurs with no answer, it immediately ends the phone call attempt without issuing any spoken message, and waits the programmed Time Between Alarm Calls, before placing a call to the next phone number.

The default setting for this feature is "off". When this feature is turned on, the programming menu will allow you to program this "Maximum Number of Rings" before the call attempt is terminated.

The default value is 5 rings. If you wish to alter this value, the range of programmable values is 4 to 20 rings.

Also when this function is turned on, when placing alarm calls, the product listens for a busy signal. If it hears a busy signal it immediately ends the call and waits the programmed Time Between Alarm Calls, before placing a call to the next phone number.

Call Progress Monitoring depends upon the Guard-it™ autodialer's ability to interpret the various tone signals heard on the phone line. Because there is a lot of variance in the nature of these signals from one local phone company to another, it is important to

thoroughly test the proper functioning of Call Progress Monitoring, if you choose to turn this feature on.

[5] Status Report (Input Review)

This selection in the top menu causes the Product to recite the status of any input channels which are in any kind of non-normal state. Any channels which have been programmed "off" will not be mentioned.

[6] Programming Review

This feature allows you to review all the programming settings. Any messages which you have recorded will also be recited. We suggest that you use this feature to write all your programming entries on the **programming log sheet** provided in this manual. This will allow you to easily re-create your Guard-it™ autodialer setup should it ever be necessary to replace or reprogram the unit. It is also helpful in the event you need to call for Customer Support.

[7] Acknowledged Alarm Reset

As previously mentioned, under test conditions you cannot quickly recreate an unacknowledged alarm on a given input when that input is already in an Acknowledged Alarm state. The reset feature allows you to force a clearout of the alarm reset timers, so that all input channels (and power failure alarm) are immediately ready to be tripped into Unacknowledged Alarm for the purpose of further testing. Note that unlike the other six menu choices, this choice is not printed on the front label of the product.

4.2 Restoring Programming To Factory Default Settings

It is possible to restore your Guard-it™ autodialer to factory default settings for all programming items, including clearing out all recorded messages.

To do this, locate the plugged hole in the top of the enclosure, and remove the plug. While the product is turned on (but not in programming mode), use a screwdriver blade or similar device to momentarily connect the two pins which are accessible through the hole.

The four input channel LED's will turn orange while the unit "reprograms" itself to factory default settings. When this process is completed, the LED's are restored to their normal color and the product is ready for new programming.

4.2.1 Table of Default Programming Values

PROGRAM ITEM	DEFAULT	RANGE	REPROGRAMMED TO:
INPUT ON/OFF	ON	ON, OFF	
ALARM STATE IF CONFIGURED FOR CONTACT INPUT	CLOSED IS ALARM	CLOSED, OPEN	
ALARM SET POINTS IF CONFIGURED FOR ANALOG INPUT	OFF	0.0-99.9%, OFF	
PHONE LINE ALARM ON/OFF	OFF	ON, OFF	
ALARM TRIP DELAY ALL INPUTS (POWER FAIL DELAY IS 5 MINUTES FIXED)	2.0 SEC	0.1-999.9	
TELEPHONE NUMBERS	NONE	UP TO 60 DIGITS	
INTERDIGIT DIALING DELAY	10 SEC	0-99.9 SEC	
TIME BETWEEN ALARM CALLS	2 MIN	0.1-99.9	
ALARM RESET TIME	1.0 HRS	0.1-99.9	
TONE/PULSE DIAL MODE	AUTO	AUTO, TONE, PULSE	
RING ANSWER DELAY	1 RING	1-20	
CALL PROGRESS MONITORING	OFF	OFF, ON	
MAX RINGS BEFORE ABANDON CALL (WHEN CPM IS ON)	5 RINGS	4-20	

5 THE GUARD-IT™ AUTODIALER IN OPERATION

5.1 The Alarm Process

Much of the operation of the Product was explained in the previous chapter on programming.

To review the sequence of events that starts with the detection of a fault condition on a given input channel, refer to the Alarm Process diagram.

Please keep in mind the following facts:

- A fault condition must be detected continuously for the duration of the programmed Alarm Trip Delay, before an Unacknowledged Alarm will occur. During this timeout, the corresponding input channel LED will blink green.

- The Alarm Trip Delay for input channels is programmable, with a default value of 2 seconds. For power failure alarm, the Alarm Trip Delay is fixed at 5 minutes.

- Once an Unacknowledged Alarm occurs, the corresponding LED will blink red, and alarm calls will be placed indefinitely until the alarm is acknowledged, <u>even if the fault condition returns to normal.</u>

- When the alarm is acknowledged, the corresponding LED turns solid red, and further alarm calls on behalf of that input channel (or power failure alarm) will be suspended.

- At the moment of acknowledgment, an internal Alarm Reset Timer begins timing, and when it has completely timed out, the acknowledged alarm status for that input channel is automatically cleared. As a result, if the fault condition no longer exists, no new alarm will be created. If a fault condition does still exist, then after the alarm trip delay elapses, a new Unacknowledged Alarm and a new cycle of alarm calling will occur.

- If the product loses all power or is turned off, when power is restored the acknowledged alarm status will have been cleared. Therefore, if a fault is still present, then after the alarm trip delay has elapsed, a new unacknowledged alarm will occur, resulting in new calls being placed.

- If the OFF/DISARMED/READY switch on the front panel is in the DISARMED position, any such alarm will be automatically acknowledged so that no alarm calls will be placed.

- If the phone line connected to the Guard-it™ autodialer has an extension phone and it is in use at the time the product attempts to place an alarm call, the call will not go through to the programmed phone number, but the alarm message will be superimposed on the phone call in progress on the extension phone.

Guard It Alarm Process Diagram

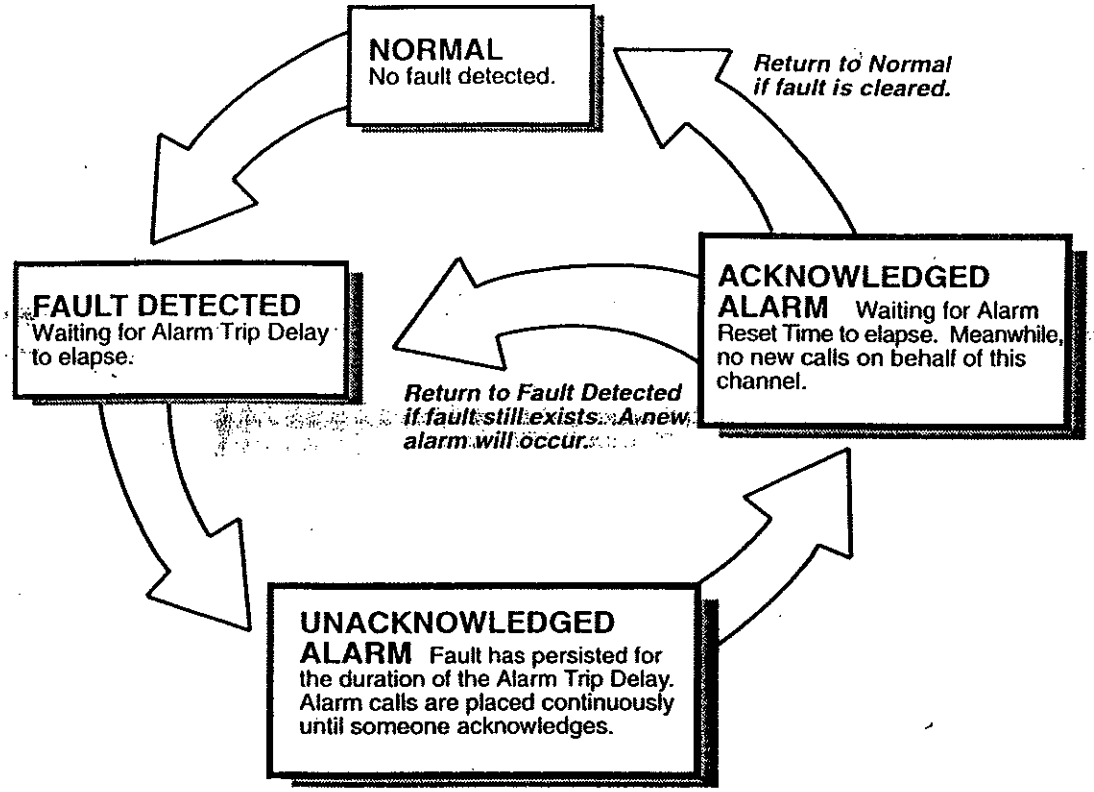

Channel Light (LED) Indications:

Steady green - Normal

Flashing green - Fault detected but alarm trip delay not timed out.

Flashing red - Unacknowledged alarm.

Steady red - Acknowledged alarm.

Power Failure Alarm (LED) Indications:

Flashing red indicates loss of external 12 VDC power. After 5 minutes, alarm calls will be placed. Upon acknowledgement, light is on with no flashing.

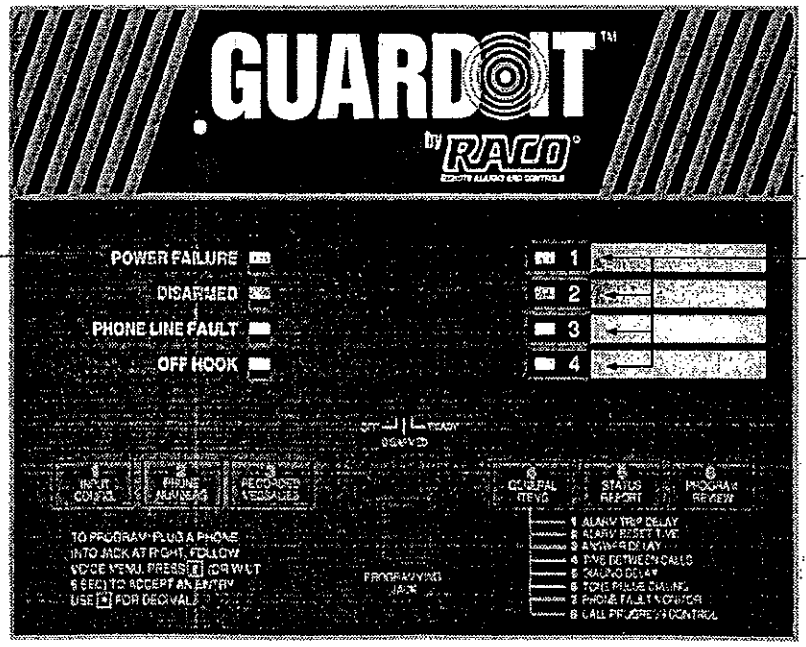

Note that the alarm reset function is somewhat similar to a "snooze alarm" on an alarm clock. If someone acknowledges an alarm but does not correct the condition, a new series of calls will be placed after a "snoozing" period has elapsed.

5.2 Receiving And Acknowledging An Alarm Call

When you receive an alarm call from your Guard-it™ autodialer, listen to the message to learn what alarm(s) exist. The message round will start with the Station ID message, followed by the specific alarm message for the input channel(s) in alarm, and/or a message stating "power is off".

Note that any input channels which have been programmed for analog, will be reported regardless of whether they are in alarm or not. If there is a high or low level alarm on an analog channel, the words "high (or low) level alarm" will be added.

The additionally informative words "fault", "now normal", and "acknowledged" may be added as follows:

If the input of a given input channel is in fault but has not yet persisted long enough to trip an alarm for that input, the message for that input will be included with the word "fault" added.

If the input of a given channel in alarm has returned to normal as of the time of the phone call, the message for that input will be included with the words "now normal" added.

If a given input channel is already in an acknowledged alarm state, the message for that input will be included with the word "acknowledged" added.

At certain points in the message round, a prompting beep will be issued. This is your cue to press a "9" immediately after the tone to acknowledge the alarm. Upon detecting the "9", the Product will say "Alarm is acknowledged. Goodbye", and the call will end.

Following the final message round, the microphone will be turned on so that you can hear sounds occurring in the area of the product. Then there will be one last beep to allow acknowledgment before the call ends.

If you do not acknowledge an alarm call, the Product will end the call and wait for the programmed Time Between Alarm Calls (default 2 minutes), before going on to place a call to the next programmed phone number, repeating the calling endlessly until the alarm is acknowledged.

If the Call Progress Monitoring function is not turned on, you will generally pick up the phone in the middle of a message. Simply continue to listen, and the message will continue to the start of a complete new round.

If the Call Progress Monitoring function is turned on, there may be a delay when you answer the phone, before the messages begin.

You may also acknowledge the alarm by placing a return call to the Guard-it™ autodialer. The best way to do this is to wait for the alarm call to end before you place your return call, so that the line will not be busy. At the sound of the prompting beep, press a "9", and the Product will respond by saying "Alarm is acknowledged. Goodbye."

5.3 Power Failure Alarms

The alarm trip delay for power failure alarm is fixed at 5 minutes.

Note that you can only receive a power failure alarm if an optional rechargeable lead acid "Gel Cell" battery is installed, since otherwise the power failure would prevent operation of the product. If you have installed an external "uninterruptible" source of 12 VDC power for the product, it will not know that there has been a failure of primary power unless this is reflected at one of the signal inputs.

5.4 Placing An Inquiry Call To The Guard-it™ Autodialer

You may call the Guard-it™ autodialer at any time other than when you are programming, to get a status report of all input channels.

The product will answer the phone after waiting for the programmed ring answer delay (default 1 ring).

The message you hear may include particular informative phrases such as "no phone numbers programmed", "power is off", "disarmed", etc. There will be two complete message rounds, followed by a listening period when the microphone is turned on, before the product ends the phone call.

If there are any unacknowledged alarms, you may acknowledged them by pressing "9" immediately following the beep.

5.5 Acknowledging An Alarm From The Front Panel

To acknowledge an alarm from the front panel, move the selector switch to the DISARMED position, then return it to the READY position. The product must not be in programming mode or presently placing a phone call, for the alarm to be acknowledged in this way.

5.6 Clearing AnAcknowleded Alarm From The Front Panel

To force a clearing of the acknowledged alarm status in advance of the time when the alarm reset timer would otherwise do it, select choice [7] from the top menu, or simply turn the product off and then on again. If there is still a fault being detected, then after the expiration of the alarm trip delay, a new unacknowledged alarm will occur with new alarm calls being placed.

6 TROUBLESHOOTING

If the product appears "dead" with no lights or action of any kind, suspect the external power source (most likely) or a blown internal fuse (less likely). There is a diagnostic light located behind a round hole on the lower right hand edge of the enclosure. If this light is lit, it means that there is at least 8 VDC (the minimum voltage required) reaching the product and that the internal fuse (5 x 20 mm, 0.8 ampere) is good.

In turn, this means that if the light is not lit, then you can track down and correct the problem without need to return the product to the factory for service. If it is lit and the product appears dead, then factory service is needed.

Verify that all connections are correct and that the connector block is plugged firmly into place in the correct orientation.

If there is a problem with phoning, use the programming phone to test the phone line, temporarily plugging it into the premises phone line jack in place of the autodialer connection.

Most other apparent problems, especially at startup, are the result of incorrect connection or programming, or misunderstanding of how the product operates.

If after reviewing this manual you still have difficulty, Raco's Customer Support service is available from 8 AM through 4:30 PM on weekdays, at (800) 449 4539.

Appendix A: ANALOG (4-20 MA) INPUTS

A.1 Connecting 4-20 MA Analog Signal Inputs

As an alternative to contact inputs or digital logic inputs, you may connect 4-20 ma analog signals to any of the inputs. The connections must be made with the correct polarity. Refer to the diagram.

Note that the negative connection points for each of the inputs are connected to each other, and to common ground, inside the product. Most 4-20 ma signal circuits are "floating" with respect to ground, and for such signal circuits the grounded inputs on the Guard-it™ autodialer will usually cause no problems.

However some 4-20 ma signal circuits already have a connection to ground at some other point in the current loop. If your current loop has such a connection and if you cannot remove it, it is best to install an "isolator" such as Model T700-0000 made by Action Instruments (619) 279 5726 . Otherwise, signal errors will be introduced, both for the Guard-it™ autodialer and for any other elements in the same current loop.

Note that similar devices are available from the same manufacturers, which accept signals in different formats (such as 0-1 VDC, etc.) and which translate such signals into standard 4-20 ma signals which the Guard-it™ autodialer can accept.

The easiest way to verify that there are no grounding problems, is to verify that the current in the loop does not change when the Guard-it™ autodialer is added to the loop.

For example, if there is a chart recorder or readout device in the current loop, first take a reading with the Guard-it™ autodialer completely disconnected from the loop.

Do this by unplugging the connector block and temporarily shorting the + and - inputs on the signal input points on this connector block. Observe the reading, and then remove the short and plug in the connector block to include the Guard-it™ autodialer in the loop, turn it on, and verify that this does not change the reading on the readout device. All power and ground connections to the Guard-it™ autodialer must be in place for this test to be valid. Also, the input channel being tested must be programmed for analog input as described below.

If you are troubleshooting by making voltage measurements across the signal input connection points on the Guard-it™ autodialer, bear in mind that if the product is turned off or if it has not been programmed for analog input, an internal voltage clamp will result in a fixed voltage drop of about 7 VDC. If the product is turned on and the input has been programmed for analog input, a loop resistance of about 220 ohms will result in a voltage drop of approximately 0.88 VDC with a signal level of 4 ma, and approximately 4.4 VDC with a signal level of 20 ma.

A.2 Programming For Analog Signal Inputs

From the top menu, when you select [1] for input programming and then select an input channel number to program, the voice menu will prompt you with the following choices:

[1] Alarm on Open Circuit

[2] Alarm on Closed Circuit

[3] Off (so that this input channel will not report or activate its corresponding front panel LED)

[4] Analog (4-20 ma current loop) signal.

If an input channel is configured for an analog signal, the menu also gives you two additional choices:

[5] To program an analog high alarm level set point value

[6] To program an analog low alarm level set point value

Example: to program input channel number four for analog input, from the top menu you would press [1] for input programming, then [4] to select input number four, then [4] again to configure this input channel for analog input.

Input channels which have been programmed for analog (4-20 ma) signals, will report a 4 ma signal level as 0.0% and a 20 ma signal level as 100.0%. Signal levels between these limits will be reported in linear scale proportion as a percentage between 0.0% and 100.0 %. Note that as a result of this linear analog scale, an input current of 0 ma would give a reading of *minus* 25.0%.

The Guard-it™ autodialer is very sensitive, being capable of detecting variations as little as 0.1%. Absolute accuracy should be within 0.5%. Due to substantial input filtering, it takes several seconds for any sudden change in input level to become fully settled.

A translation table appears below, relating the analog input signal in milliamperes to the spoken percentage reading. It also allows you to write in the corresponding actual physical readings (such as water level in feet, etc.) for various signal levels.

When programming analog high or low alarm set points, enter the set points as a percentage value, using the star (*) key for a decimal point if desired.

EXAMPLE: to enter a high set point value of 56.8% for input channel number 4, from the top menu you would press [1] for input programming, then [4] to select input number four, then [5] to select the high alarm set point for this input channel, and then:

5 6 * 8 #.

The menu will allow you to program high or low analog set points only if the input channel has first been programmed for analog input.

To turn off a given alarm set point so that it will not create an alarm, press "star" (*) and then pound (#).

In operation, whenever a high or low level alarm setpoint is exceeded continuously for the duration of the programmed alarm trip delay, an unacknowledged alarm will occur.

A.3 Analog Translation Table

This table translates various input signal levels in milliamperes, to the corresponding percentage values which will be reported.

It also allows you to write in the corresponding translation to the actual physical parameter being measured, such as water level in feet, etc. You can make copies of this for later use, even including reference to this table in your recorded message, which might be: "Referring to the analog translation table, the water level percentage reading is".

SIGNAL:	READING:	CORRESPONDS TO PHYSICAL VALUE:
4 Milliamperes	0.0%	
5 Milliamperes	6.2%	
6 Milliamperes	12.5%	
7 Milliamperes	18.7%	
8 Milliamperes	25.0%	
9 Milliamperes	31.2%	
10 Milliamperes	37.5%	
11 Milliamperes	43.7%	
12 Milliamperes	50.0%	
13 Milliamperes	56.2%	
14 Milliamperes	62.5%	
15 Milliamperes	68.7%	
16 Milliamperes	75.0%	
17 Milliamperes	81.2%	
18 Milliamperes	87.5%	
19 Milliamperes	93.7%	
20 Milliamperes	100.0%	

Analog 4-20 ma Signal Input Wiring Connection Diagram

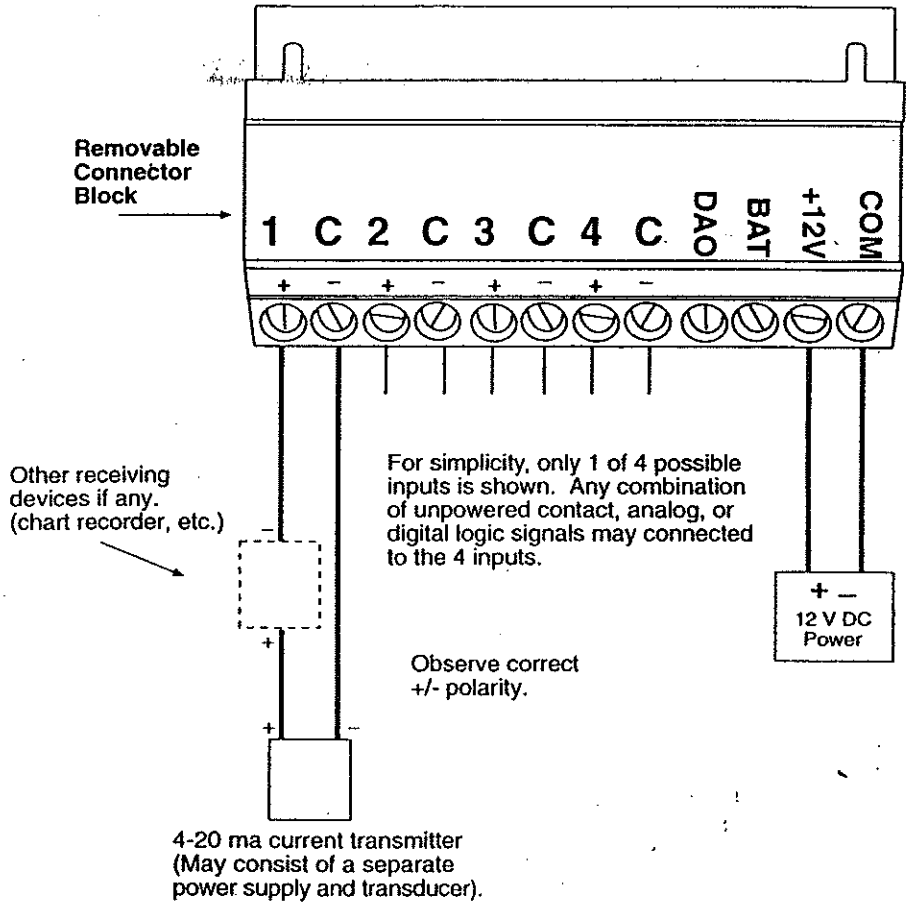

Appendix B: CONNECTING DIGITAL LOGIC SIGNAL INPUTS

As an alternative to contact inputs, you may connect 5-volt logic signals as long as the common electrical ground for the Guard-it™ autodialer is the same as for the 5 volt logic system.

A logic "0" will be interpreted by the Guard-it™ autodialer as a closed circuit, and a logic "1" will be interpreted as an open circuit.

If you want to connect higher voltage logic signals (up to 24 VDC), insert a rectifier diode (such as a 1N914, 1N4005, etc.) between the logic signal and the signal input on the Guard-it™ autodialer. *The diode must be oriented so that the cathode (banded) end is connected to the logic signal.*

Digital Logic Signal Input Wiring Connection Diagram

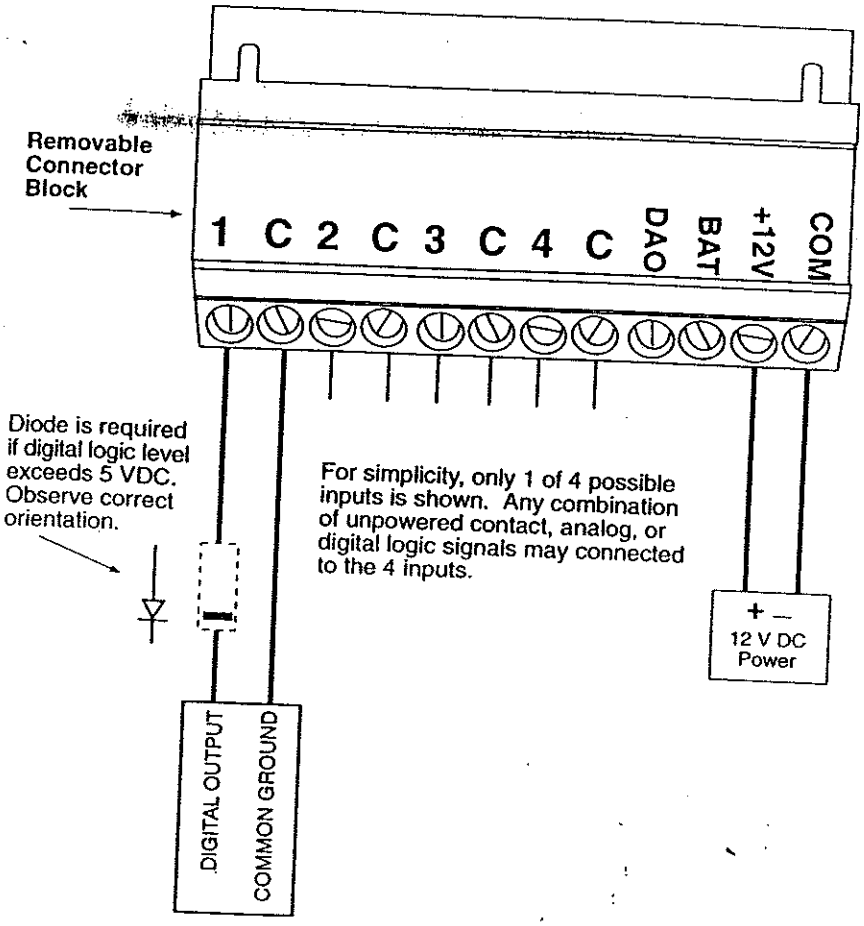

Appendix C: DIGITAL ALARM OUTPUT (DAO)

The digital alarm output may be used to activate an external device such as the coil of a relay or the input of a logic circuit.

This output is activated (pulled down to common ground voltage) whenever there is an unacknowledged alarm. It is deactivated when the alarm is acknowledged.

The load you connect will have 12 VDC applied across it when activated, if you connect as shown in the diagram. It must draw no more than 200 milliamperes, and so it must have a resistance of at least 60 ohms.

A typical application would be to power the coil of a relay. The contacts of the relay may then be used to control devices of higher voltage and power, such as outside warning lights or buzzers.

Alternatively, the DAO output may be connected directly into a DC logic input circuit. It has an internal 10k resistor pulling it to +5VDC when deactivated, and it is pulled to ground when activated. It may even be connected into a 24 VDC logic input such as found on PLC's, but due to the resistor connected to +5VDC, an external pullup resistor (nominally 1K) to a +24 VDC source may be needed.

Optional External Battery Connection

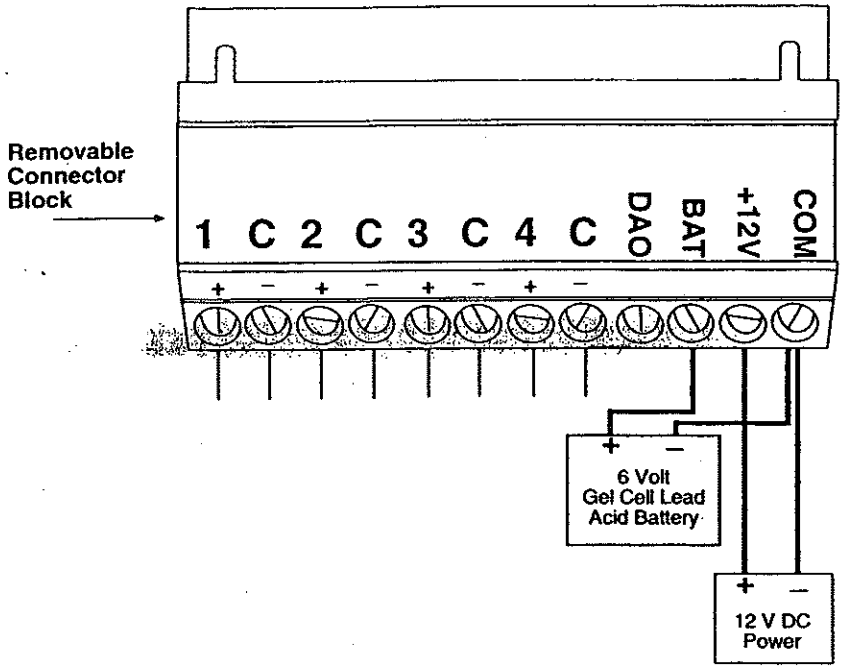

Optional Digital Alarm Output (DAO) Connection

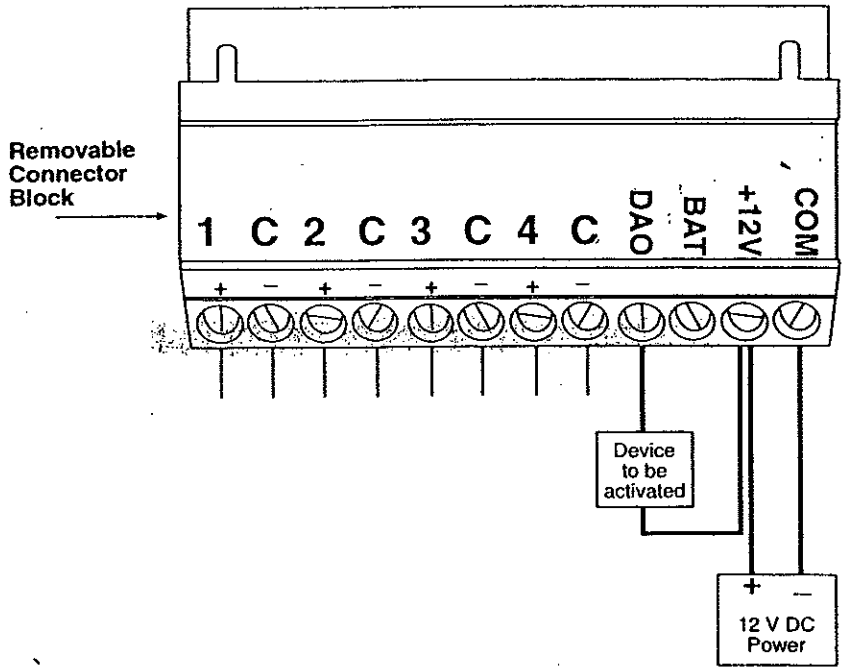

Appendix D: OPTIONAL EXTERNAL GEL CELL BACKUP BATTERY

An internal 6 volt, 4 ampere-hour battery is an available option for the Guard-it™ autodialer. However as an alternative or in addition to the optional internal battery, you may connect your own 6 volt gel cell lead acid battery as shown in the diagram. It may have a capacity of up to 10 ampere hours. The battery will be kept charged by the product's internal circuitry.

The function of any such battery is to maintain operation of the product during failures of primary power. Each ampere hour of capacity will keep the product operational for approximately 6 hours depending on the number of alarm calls placed and other factors.

Appendix E: PROGRAMMING FOR USE WITH NUMERIC PAGERS

Numeric pager systems require the caller to dial the phone number of the pager service, wait for a prompting beep, and then enter some additional digits which are to be displayed on the receiving pager, and then finally, enter a pound(#) to complete the entry.

To call and cause a display on a numeric pager, your Guard-it™ autodialer will do essentially the same thing, except that it will wait for a delay period which you set, instead of listening for the pager system's beep, before sending the remaining digits.

This is all accomplished by programming an "extended" phone number, which includes a delay which you invoke by pressing the star (*) key.

To program this special "extended" phone number, after selecting which of the 8 phone numbers to program, key in the telephone number of the paging service, then press the star (*) key, then continue with the digits that you want to appear on the receiving pager, and finally press pound (#) when your entry is complete, then wait three seconds for the Guard-it™ autodialer to automatically accept and repeat back the extended phone number which you have entered.

In this special case after you have invoked a dialing delay by using the star (*) key, the Guard-it™ autodialer treats the pound (#) key in a special way. Normally, the pound (#) key is used to accept an entry or to return to a previous menu level. However once a delay has been invoked, *the star and pound keys are treated as "dialable" digit values for the remainder of this programmed phone number.* This allows for the desired result of including a # which will actually be "dialed" to complete the communication with the pager system.

For example, to display "12345" on a pager which can be "paged" by calling 555 1000, you would key in:

5 5 5 1 0 0 0 * 1 2 3 4 5 #

and then wait five seconds for the Guard-it™ autodialer to accept and recite back this extended phone number, which it will recite as:

5 5 5 1 0 0 0 "Delay 1 0 seconds" 1 2 3 4 5 "Pound".

(The stated number of delay seconds will be whatever Dialing Delay value is programmed--see below).

In a typical application, the Guard-it™ autodialer's own phone number would be the number to be programmed for display.

The other step you must take, is to place several calls to the pager system in order to determine by experiment how long a waiting time is suitable before the paging system will reliably have issued its prompting beep, so that it is definitely ready to accept the

digits to be displayed. Begin the timing at the moment you dial the last digit of the pager service number, and end the timing when you hear the pager service's prompting beep. We suggest you add three seconds to the longest time period you observe.

Then program this delay value in seconds, as the Dialing Delay under the General Programming Menu. The default value is ten seconds, and this value will work for many pager systems without alteration.

With the extended phone number and Dialing Delay value fully programmed, it is best to verify (three times is suggested) that the Guard-it™ autodialer will successfully cause the pager to be reached with the intended display.

This is done by manipulating one of the signal inputs to cause an alarm.

Note: Because pager systems issue a variety of special signaling tones, it is best to keep the Call Progress feature turned off if using pager systems.

You can "eavesdrop" on the progress of the test calls using a programming phone, as long as Call Progress is turned off. Do not pick up the programming phone until the dialing begins.

APPENDIX D

MANUFACTURER'S INSTRUCTIONS FOR METHANE DETECTOR

Owner's Manual

NATURAL GAS DETECTOR

Drop Cord

120 Volt Plug In Model

NG200

120 Volt Hardwire Model

NG400

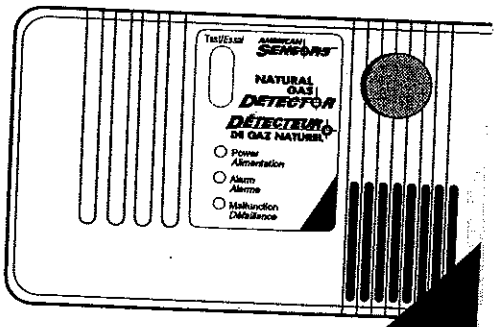

AMERICAN SENSORS

HOME HEALTH AND SAFETY PRODUCTS™

1500-0022 (rev A)

Send in your Warranty Card TODAY!

NG200/400 or LP200/400
Owner's Manual Addendum

Additional Information In Case of Alarm.

- **Evacuate The Premises Immediately If Unit is Alarming!**
- Do not enter home if unit is alarming.
- Do not unplug or disconnect detector if unit is alarming.
- Do not turn on or operate any electrical switches or appliances.
- Do a head count to check that everybody is accounted for.
- Call the gas utility company and ask them to determine the source of the gas.
- Do not re-enter the home until the problem has been corrected and the gas has been dispersed.

IMPORTANT:
This device is not suitable as a carbon monoxide detector or smoke/fire detector. This device is not suitable for installation in a hazardous location, as defined in the National or Canadian Electrical Code.

1500-0091

Introducing the NG200 and NG400 Natural Gas Detectors

The NG200, NG400 Natural Gas Detectors are effective products for detecting any buildup of natural gas in your home. American Sensors Electronics Inc. has been developing and making products for detecting gases since 1985.

Your new detector:

- Is easy to install
- Monitors for natural gas continuously
- Sounds a loud alarm (85 dB) when it detects a buildup of natural gas
- Has a Test button so that you can test it at any time
- Tests itself continuously
- Is listed under the Underwriters Laboratories Standard UL1484 and is certified by the Canadian Standards Association
- Has a 5-year comprehensive warranty

Table of Contents

	Page
Why should you be concerned about natural gas?	4
Where should you install the detector?	5
How should you install the detector?	6
How can you test the detector?	12
How can you maintain your detector?	13
What do the lights mean?	14
▲ What should you do if the alarm sounds?	15
What do you do after the problem has been corrected?	16
Technical Information	17
Warranty Information	18

Why should you be concerned about natural gas?

The harmful element in natural gas is methane, a colourless and flammable gas. As natural gas builds up, it mixes with oxygen to produce a mixture that can be explosive if ignited by a spark or flame.

Most likely sources of leaks are gas appliances, heaters, stoves, refrigerators, and furnaces. Gas leaks from outside or below ground level can also seep into your home.

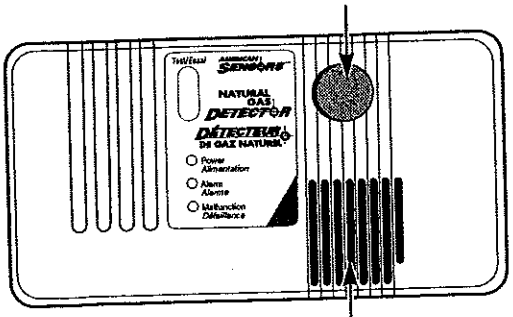

Where should you install the detector?

Natural gas is lighter than air and so collects in the highest areas of rooms and homes. To detect a dangerous concentration of natural gas, you should place your detector near a natural gas appliance or in a room above the appliance. For example, a natural gas leak in the kitchen can create a buildup in the floors above.

You should place your detector as close to the ceiling as possible (see the following page for details).

How should you install the detector?

FOR DROP CORD PLUG IN MODEL NG200:
Place the Natural Gas Detector within 1m (36 inches) of the ceiling and within 2m (6 feet) of a continuously powered (unswitched) standard 120 VAC wall outlet. The detector has a power cord that is 2m (6 feet) long and plugs into a wall outlet.

To install the detector:

1. At the place where you are going to install the detector, draw a horizontal line four inches long.
2. Place the circular mounting plate so that the square holes are aligned on the line.
3. In each of the circular slots, draw a mark to locate a mounting plug and screw.

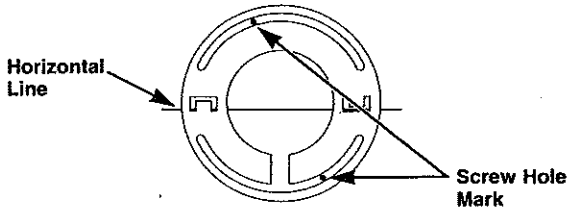

4. Remove the mounting plate.
5. Using the appropriate size drill, drill two holes at the marks and insert wall plugs.
6. Using the two screws and wall plugs (all supplied), attach the mounting plate to the wall, ensuring that the cord slot in the mounting plate is down.

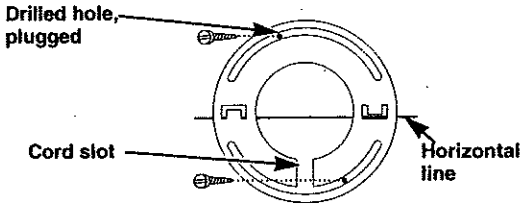

7. Slide the detector on to the mounting plate so that the two arms on the mounting plate fit into two slots in the back of the detector.

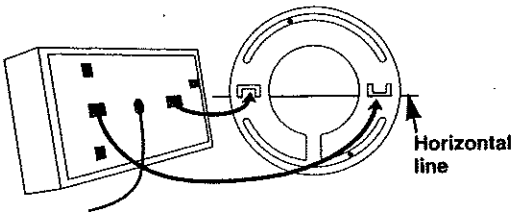

8. Ensure that the detector's power cord is located in the cord slot.
9. Give the detector a short counter-clockwise twist to lock the detector in place.

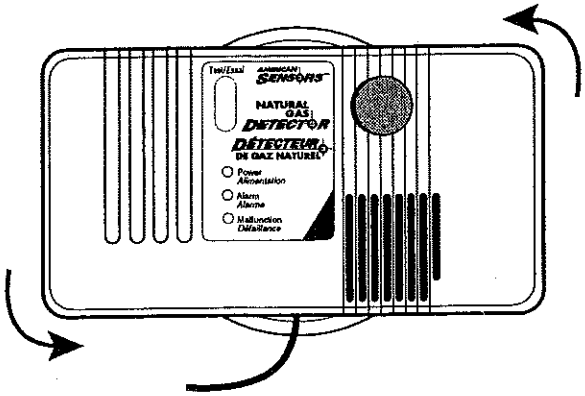

If your detector is not horizontal, the mounting plate can be readjusted.

Wait for ten minutes before you test the detector (see page 12). During that time, the alarm may sound several times and the yellow (Malfunction) light may light up once or twice as the detector cleans the natural gas sensor. This will also occur if the power to the detector is interrupted.

FOR HARDWIRE MODEL NG400:

WARNING: The NG400 Natural Gas Detector is to be mounted onto a junction box within 30cm (12") of the ceiling, or on the ceiling itself. (Recommended practice, NFPA 720 Proposed Standard). This unit is for permanent connection only and should be installed by Qualified Service Personnel only. Do not connect wires to an AC outlet, extension cord, or power cord and attachment plug. This unit operates on 120V AC.

To install the Detector, please follow these steps:

1. Make sure the AC power to the octagonal junction box is turned off at the **Fuse Box** or **Service Panel** before installation.
2. Install the mounting plate (supplied) to the junction box using the two 5/8 inch screws (supplied).

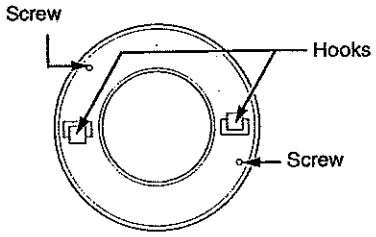

Mounting Plate

3. Pull out the **white wire (neutral)** from the junction box through the mounting plate and connect it to the **white wire** of the Detector using a twist-on wire connector (supplied). The method is as follows:
   Strip both wires 12mm (1/2 inch). Keep the ends even. Hand twist the connector onto the wires as tightly as possible. Hold the connector and pull each wire to make sure no wire slips out. Make sure no bare wire is exposed outside the connector. Connect the **black wire (live)** from the junction box to the black wire of the Detector using a twist-on wire connector and the same method as above.

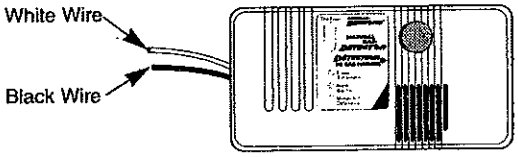

Detector Front View

4. Check all connections and carefully push the wires and wire connectors back into the junction box.

5. Push the Detector against the mounting plate with the 2 hooks in the mounting plate fitted into the 2 square holes in the Detector.
6. Rotate the Detector **counterclockwise** until a clicking sound or two is heard. The Detector should now be secured in place.
7. Turn back on the power at the fuse box or service panel.
8. Leave the owner's manual behind in the original box for the end user.

Kit includes:
Plastic mounting plate, 1
Marrette twist-on wire connectors, 2
5/8 inch square head screws, 2

Wait for ten minutes before you test the detector (see next page). During that time, the alarm may sound several times and the yellow (Malfunction) light may light up once or twice as the detector cleans the natural gas sensor. This will also occur if the power to the detector is interrupted.

How can you test the detector?

To test the detector (wait at least ten minutes after installing it), press the Test button. The alarm sounds.

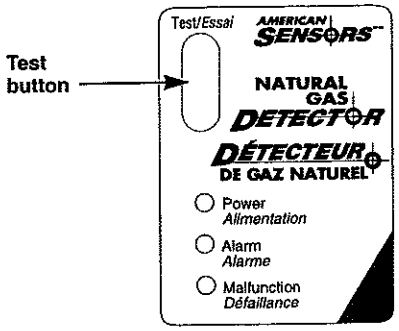

To reset the alarm, unplug the detector (model NG200), wait ten seconds, then plug it in again.

For model NG400, turn off power at the fuse box or service panel instead of unplugging the unit.

The detector continually checks itself. If it finds a malfunction, the yellow light will illuminate and the unit will sound intermittently. If this occurs, call our Healthy Home Hotline at:

American Sensors 1-800-387-4219
(Help is available 24 hours every day including holidays.)

How can you maintain your detector?

A detector is only useful if it works. The following illustration explains proper maintenance:

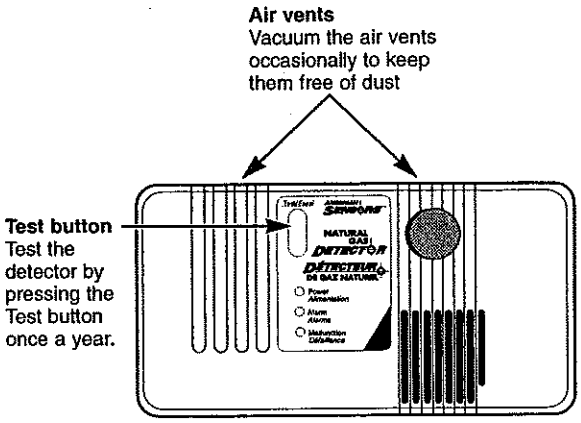

Note: To reset the alarm, for model NG200, unplug the detector from the wall outlet, wait ten seconds, then plug it in again.

For model NG400, turn off power at fuse box or service panel instead of unplugging the unit.

What do the lights mean?

The detector has three lights

◯ Power – Green

This lights up green when the detector has power. It is normal for this light to be on while the detector is plugged in.

◯ Alarm – Red

This lights up red when the alarm sounds. It is normal for this light to turn on when you press the Test Button.

◯ Malfunction – Yellow

This lights up yellow and the alarm sounds intermittently when the detector finds a malfunction while it is checking itself. It is normal for this light to turn on once or twice after you plug in the detector or after a power failure.

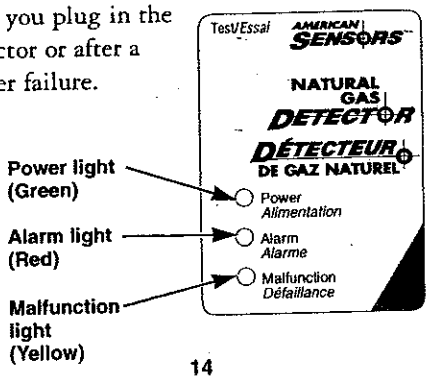

What should you do if the alarm sounds?

EVACUATE IMMEDIATELY!

Do a head count to check that everybody is accounted for. Call the fire department and ask them to determine the source of natural gas. Do not re-enter the premises until the problem has been corrected and the natural gas has been dispersed.

WARNING: Activation of this device indicates the presence of natural gas, which is flammable and can be fatal. The source of the natural gas may be an object such as a furnace, a vehicle, or other natural gas appliance.

Correction of the problem may require the services of a local natural gas company or contractor.

CAUTION: This detector will only indicate the presence of natural gas near the detector. Natural gas may be present in other areas.

What do you do after the problem has been corrected?

On re-entering the premises after an alarm:

1. Unplug the detector (NG200) for ten seconds, and then plug it in again.
   For model NG400, use the fuse box or service panel to turn off power instead of unplugging the unit.

2. After ten minutes (during which the alarm may sound once or twice and the yellow light may flash), test the detector to make sure that the detector is working properly (see page 12).

Technical Information

Activation

Your NG200 or NG400 Natural Gas Detector uses a sensing technology that enables the detector to sound an alarm if the concentration of gas exceeds 25% of the Lower Explosive Level (LEL).

Exposure Times

- Units are calibrated to alarm at less than 25% LEL.
- Unit will alarm within 5 seconds of this threshold being reached.

Features	
Power Supply NG200 NG400	120 VAC, 60 Hz, 7 W 120 VAC, 60 Hz, 7W
Dimensions	16.5cm x 8.9cm x 3.5cm (6.5" x 3.5" x 1.375")
Recommended Operating Temperature	4.4°C to 37.8°C (40°F to 100°F)
Gas Detection Level	less than 25% LEL of natural gas
Lights	Power (green) Alarm (red) Malfunction (yellow)
Listings	UL Standard 1484 CSA Certified

Warranty Information

Limited Warranty

American Sensors Electronics Inc. warrants its product, to the original consumer purchaser, the Natural Gas Detector to be free from defects in material and workmanship under normal use and service for a period of five (5) years from date of purchase. American Sensors Electronics Inc. makes no other express warranty for this Natural Gas Detector. No agent, representative, dealer or employee of the Company has the authority to increase or alter the obligations or limitations of this Warranty. The company's obligation of this warranty shall be limited to the repair or replacement of any part of the detector which is found to be defective in materials or workmanship under normal use of service during the five (5) year period commencing with the date of purchase.

Units in need of repair should be returned to the point of purchase. Or call 1-800-387-4219, for shipping instructions and a returned goods authorization number, to return to American Sensors Electronics Inc. Returned goods must be shipped prepaid.

The company shall not be obligated to repair or replace units which are found to be in need of repair because of damage, unreasonable use, modifications, or alterations occurring after the date of purchase.

The duration of any implied Warranty, including that of merchantability or fitness for any particular purpose, shall be limited to five (5) years on the detector commencing with the date of purchase. In no case shall the Company be liable for any consequential or incidental damages for breach of this or any other warranty, expressed or implied whatsoever, even if the loss or damage is caused by the Company's negligence or

fault. Some provinces do not allow the exclusion or limitation of incidental or consequential damages, so the above limitation or exclusion may not apply to you. This warranty gives you specific legal rights, and you may also have other rights, which vary from province to province.

IMPORTANT:
Not suitable as a smoke detector or as a fire detector. This device is not suitable for installation in a hazardous location, as defined in the Canadian Electrical Code.

AMERICAN SENSORS
HOME HEALTH AND SAFETY PRODUCTS™

American Sensors is a leader in the development and manufacture of Carbon Monoxide, Natural Gas, Propane Gas, Smoke and Fire Detectors. Through the distribution of indoor air quality management products, American Sensors is committed to the establishment and maintenance of a safe and healthy home and work environment.

To learn more about how to protect your home and the health of your family, complete and mail the enclosed Owner's Registration form.

1 (800) 387-4219: 24-Hour "Healthy Home" Hotline

American Sensors Electronics Inc.
100 Tempo Ave.
Toronto, Ontario M2H 2N8

Printed in Canada

Owner Registration

Congratulations for purchasing an American Sensors Natural Gas Detector.

To validate your warranty, you must fill in and send the enclosed Owner Registration card within 14 days of buying the detector.

The additional information we have requested will also help us to develop new products to meet your home health and safety needs.

Please respond on the mailing card provided, detach where indicated and mail.

AMERICAN SENSORS
HOME HEALTH AND SAFETY PRODUCTS™

APPENDIX E

WDNR LETTER FOR CONDITIONAL APPROVAL

State of Wisconsin \ DEPARTMENT OF NATURAL RESOURCES

Tommy G. Thompson, Governor
George E. Meyer, Secretary
Gloria L. McCutcheon, District Director

Southeast District Annex
4041 N. Richards Street, Box 12436
Milwaukee, WI 53212-0436
TELEPHONE 414-229-0800
FAX 414-229-0810

December 20, 1996

Mr. Lloyd Mlejnek, P. E.
Project Manager
Milwaukee County - Couthouse Annex
907 North 10th Street
Milwaukee, WI 53233

Subject: Conditional Approval
Gas Migration Control System Design Plan
Hawley Road Landfill License #0426
County of Milwaukee and City of Milwaukee

Dear Mr. Meljnek:

We have reviewed and approved Hawley Road landfill gas migration control system design subject to the conditions listed in the attached approval. The plan was submitted on August 30, 1996.

The City and the County of Milwaukee own a site at 942-970 N. Hawley Road which is the site of the former Hawley Road landfill. Two quarries were in operation on this site at the turn of the century. The City of Milwaukee utilized these quarries for disposal of solid waste. The site is approximately 40 acres (County owns 35 acres and City owns 5 acres). The total volume of the waste on the entire site is estimated at 2.5 to 5.17 million cubic yards.

The County of Milwaukee retained Rust Environment and Infrastructure Inc. in 1995 to prepare a gas migration control system design for the Hawley Road landfill. Rust conducted a limited site investigation and submitted a draft report and the final report of its findings to the Department in December 1995 and August 1996 respectively.

The report contained investigations of site background, physical and chemical characterization of landfill gas, landfill liquid, groundwater quality, cap condition, waste type, and limit of waste. Concerning the gas migration issue, the report concluded that:

A. There is very little organic material remaining in the fill.

B. Approximately 43 percent of the fill is saturated.

C. The site is generating approximately 550 cubic feet of gas per minute.

D. The gas generated within the landfill is escaping through the cap.

E. Methane gas concentrations varying between 0 and 30 percent by volume are present at the south boundary of the landfill. The concentration of methane outside the limit of fill is less than within the fill.

F. The site property line is not well defined.

G. Fill exists beyond the property boundary and, in some cases, beneath private structures.

The County and City propose to construct an active gas migration control system at the south boundary of the landfill, where residential and commercial structures exist. The system consists of 38 vertical gas wells connected to a common header, two condensate collection tanks, and a permanent blower. The gas will be exhausted to the atmosphere. Condensate will be discharged to a licensed wastewater treatment system. The system is designed to work as active or passive. The excavated waste will be buried on site under two feet of low permeability clay soil.

Although the report investigated many important environmental aspects of the landfill, its focus was gas migration control and its design alternatives. Due to the high priority of the methane migration control issue, the Department's attached conditional approval covers gas migration issue and the related issue of the landfill cover on the County property. Our records indicate this landfill has never been formally closed under the Department's guidelines. The Department feels it is best to deal with other remediation issues under a separate correspondence. The Department will contact the County and the City of Milwaukee in the near future to provide comments on the other aspects of remediation information in this investigation report and to discuss other closure related issues.

The following exemption is granted as part of this approval:

A. s. 504.08(2)(d) Wis. Adm Code - Due to shallow depth of waste.

B. s. 504.08(2)(e) Wis. Adm Code - Due to clogging problem.

C. s. 504.08(2)(h) Wis. Adm Code - Due to buried power lines.

The Department has received a plan review fee of 5,000.00 dollars from Milwaukee County.

Please call Bizhan Zia Sheikholeslami, the Region Waste Management Engineer, at (414) 229-0852 if you have any questions regarding this approval.

Sincerely,

Franklin C. Schultz, Leader
Waste Management Team
Southeast Region

C: Frances Koonce - SER
Bizhan Zia Sheikholeslami - SER
Dennis Mack - WA/3
Don Pirruing - Rust
Donald A. Burda - City of Milwaukee

BEFORE THE
STATE OF WISCONSIN
DEPARTMENT OF NATURAL RESOURCES
CONDITIONAL GAS MIGRATION CONTROL SYSTEM PLAN APPROVAL

FINDINGS OF FACT

The Department finds that:

1. The City of Milwaukee owned and operated a municipal solid waste disposal facility located in SE 1/4 of NW1/4, Section 26, Township 7 North, Range 21 East, City of Milwaukee, Milwaukee County, Wisconsin. The old dump site street address is 942 North Hawley Road, City of Milwaukee, Milwaukee County, Wisconsin.

2. The Department of Natural Resources has formally assigned the facility identification (FID) number 241208110 for the purpose of record keeping to all activities on the property.

3. The Department has issued landfill license number 00426 to the City of Milwaukee for this facility. The facility was originally licensed on April 10, 1970. The facility accepted solid waste until 1974. The facility's solid waste license expired on September 30, 1974. The facility was accepting solid waste well before it was first licensed.

4. The landfill is considered to be a nonapproved facility under the provisions of the s. 144.441(1)(c), stats, because the landfill doesn't have a plan of operation approval under s. 144.44(3), stats.

5. The licensed area of the landfill is approximately 20 acres. The total area of study is 40 acres.

6. The site was used for the disposal of non-burnable municipal wastes, incinerator ashes, appliances, yard wastes, demolition wastes, trash, street sweeping, and industrial waste. The volume of the waste disposed of in the area is estimated at 2.5 to 5.17 million cubic yards.

7. The majority of the site was once occupied by two quarry operations which covered an area of approximately 35 acres. Schweickhart Quarry and Manegold Quarry started operation in the late 1800's and ceased operation in 1914 and 1956 respectively. The City of Milwaukee acquired these quarries to use them for waste disposal site. Falk Corporation owned a parcel of land east of the Manegold property and used it as a landfill for foundry process wastes. The filling was stopped in the mid 70's. Milwaukee County bought Manegold quarry, the Falk Corporation landfill

and the eastern portion of the Schweickhart quarry from the City. The County developed all three parcels (about 35 acres) into Doyne Park in the early 1980's. The park recreational facilities include: a 9 hole, par 3 golf course with a clubhouse, basketball courts, a soccer field and a tot play lot. The City of Milwaukee owns approximately 5 acres on the west side of the site.

8. The information reviewed in connection with this plan includes the following:

A. A letter, dated November 13, 1996, to the Department responding to the Department's review comments on design report. The comments conveyed to RUST staff during the September 13, 1996 teleconference.

B. A report titled "Gas System Design Report", dated August 26, 1996, and prepared by Rust Environmental & Infrastructure Inc.

C. A report titled "Design Investigation Report", dated August 26, 1996, and prepared by Rust Environmental & Infrastructure Inc.

D. A report titled " Draft Gas System Design Report", dated December 1995, and prepared by Rust Environmental & Infrastructure Inc.

E. A report titled " Draft Design Investigation Report", dated December 1995, and prepared by Rust Environmental & Infrastructure Inc.

F. A report titled " Methane Gas Migration Study", dated July 13, 1994, and prepared by Hydro-Search, Inc.

G. The Department Files Since 1969.

9. Additional facts relevant to this approval include:

A. The Wisconsin Department of Natural Resources was tasked by the United States Environmental Protection Agency (U.S. EPA) to conduct a Screening Site Inspection (SSI) of the Hawley Road Dump site under the FY 90 Cooperative agreement. The Hawley Road Dump was added to CERCLIS through a CERCLA 103C notification submitted to the EPA by A. O. Smith Corporation of Milwaukee, Wisconsin on June 8, 1981. The EPA assigned identification number WID #980610539. The Department staff conducted a Preliminary Assessment in January 1984 and Screening Site Inspection (SSI) in July and August of 1990. The SSI included inspection, soil, groundwater, sediment and seepage monitoring. The Department installed four groundwater

wells that still exist on the site. The decision memo stated that additional studies are needed to better characterize the site.

B. The City constructed a building on its portion of the site and obtained a license for operation of a solid waste transfer facility. The transfer facility was operated from 1973 to 1980. From 1980 until 1990, the City used its property as a storage facility and garbage cart maintenance repair shop. In 1992, the City attempted to locate their new Forestry Central District Headquarters on its property. Several studies have been done on the City's property. These studies were the first to identify the presence of methane. The City property is also listed as a LUST case where a 12,000 gallon diesel tank was removed. The LUST case has not been closed. The City of Milwaukee site is currently inactive.

10. Significant correspondence/meeting relevant to this approval are:

A. A teleconference dated September 13, 1996 between DNR and RUST staff during which the methane migration control plan was discussed.

B. A letter dated October 6, 1995 from RUST to DNR concerning field investigation activity.

C. A letter dated July 22, 1994 from the Department to the City and County of Milwaukee concerning interim methane collection system.

CONCLUSIONS OF LAW

1. The Department has authority under s. NR 514.08, Wisconsin Administrative Code, to require closure plans for solid waste disposal facilities which do not have an approved plan of operation under s. 144.44(3), stats.

2. The Department has authority under NR 506.07, 507.22, Wis. Adm. Code, to require the control of methane concentration at boundary of a solid waste disposal facility.

3. The Department has authority under s. NR 504.07(8), Wis. Adm. code, to approve construction and excavation of waste material at a closed solid waste disposal facility.

4. The Department has authority under chapter NR 516 Wis. Adm. code, to require construction documentation for gas control structures at a landfill.

5. The conditions of approval set forth below are needed to ensure compliance with chs. NR 500 to 520 Wis. Adm. Code.

6. In accordance with the foregoing, the Department has authority under s. 144.44, Stats., to issue the following conditional plan approval.

CONDITIONS OF APPROVAL

Based on the foregoing Findings of Facts and Conclusions of Law, the Wisconsin Department of Natural Resources hereby conditionally approves the gas system plan for the landfill located east of Hawely Road, City of Milwaukee, Milwaukee County, Wisconsin, subject to compliance with provision of NR 500-520, Wis. Adm. Code and the following Conditions:

1. An active gas collection system shall be installed along the south perimeter of the landfill.

2. A copy of the construction plans and specifications shall be submitted to the Department's Southeast Region office thirty (30) days prior to construction.

3. A construction schedule showing completion date shall be submitted to the Department along with condition #2. The final gas control system start up date shall not exceed October 31, 1997.

4. Condensate collection tanks shall be installed at low points of the gas system. Condensate collection tanks shall be designed with a secondary containment system. The condensate shall be treated at a licensed wastewater treatment plant.

5. Vertical gas extraction wells shall be designed to include:

   -The top 10 feet of the borehole shall be sealed.
   -Each gas extraction well shall have a flow control valve and sampling access port.
   -Polyethylene pipe shall be used for header and lateral pipes.
   -Minimum vacuum of 10 inches water column shall be available at well number 1.

6. All gas monitoring probes, the header pipe at the blower station, and the vent stacks shall be monitored quarterly for the first year and semi-annually thereafter.

7. The monitoring program shall include: methane (% by volume), Oxygen (% by volume), carbon dioxide (% by volume), barometric pressure and ambient air temperature. The date, time of sampling, and condition of ground surface in the vicinity of the monitoring probes shall be recorded at the time of the sampling. The

monitoring information shall be submitted to the Southeast Region of the WDNR by January 15 of each year. The first report shall include a narrative evaluating the gas system operation.

8. Condensate shall be sampled annually for volume, field pH, field temperature, chemical oxygen demand, five day biological oxygen demand and total suspended solids. The information shall be submitted to the Department along with methane monitoring.

9. The active or passive gas system shall be vented a minimum of 10 feet above the surrounding ground elevation. If the venting of the gas causes an odor problem, the Department may require the flaring of the gas at a later date.

10. At start up, the blower must run continuously until the probes outside the fill mass show methane concentration less than 5 percent by volume. The blower must run at minimum one day a month or whenever the methane concentration exceeds 5 percent by volume in probes outside of the fill mass.

11. Erosion control shall be implemented during construction.

12. No ponding of surface water shall be allowed on the cap. The cap shall be inspected annually and maintained as needed.

13. A draft operation and maintenance manual shall be prepared for the gas extraction system and its components prior to placement of the system on line. The manual shall be finalized after the system has been operating for some time. A copy of the final draft of this manual shall be submitted to the Department by December 30, 1997.

14. All work at the site shall be conducted under the supervision of a registered professional engineer. A qualified inspector working under the direct supervision of the professional engineer shall be on site at any time the following activities are being performed:

-Installation of methane extraction system and related components.

15. Construction inspection shall be performed at this facility as indicated below. The Southeast Region solid waste engineer shall be notified a minimum of one week prior to beginning each of the construction events listed below for the purpose of allowing the Department to inspect the work:

A. The installation of gas wells at 50% completion point.

B. The installation of gas header system at 50% completion point.

C. The installation of blower at 50% completion.

16. A construction documentation report verifying and documenting all aspects of the above conditions shall be prepared and submitted to the Department within sixty (60) days of completion of construction. The report shall contain the following, at a minimum:

A. A plan sheet (or sheets) documenting the location of all the required features and any other pertinent items.

B. A narrative explaining how the construction of the project was accomplished.

C. A series of color prints documenting all major aspects of site construction.

D. A letter under the seal of a registered professional engineer certifying that all required features have been constructed in substantial compliance with the approved plans. Any deviations from the approved plans shall be noted.

The Department retains the jurisdiction either to require the submittal of additional information or to modify this approval at any time, if in the Department's opinion, further modifications are deemed necessary.

NOTICE OF APPEAL RIGHTS

If you believe that you have a right to challenge this decision, you should know that Wisconsin statutes and administrative rules establish time periods within which requests to review Department decisions must be filed. For judicial review of a decision pursuant to sections 227.52 and 227.53, Stats., you have 30 days after the decision is mailed, or otherwise served by the Department, to file your petition with the appropriate circuit court and serve petition on the Department. Such a petition for judicial review shall name the Department of Natural Resources as the respondent. This notice is provided pursuant to section 227.48(2), Stats.

Dated: December 20, 1996

DEPARTMENT OF NATURAL RESOURCES
For the Secretary

Franklin C. Schultz, Leader
Waste Management Team
Southeast Region, WDNR

B. Z. Sheikholeslami

Bizhan Zia Sheikholeslami, Region Engineer
Waste Management Team
Southeast Region, WDNR

APPENDIX F

MMSD APPROVAL FOR CONDENSATE DISCHARGE AND MH LOCATION

Milwaukee Metropolitan Sewerage District
260 West Seeboth Street
P.O. Box 3049
Milwaukee, Wisconsin 53201-3049
(414) 272-5100

RECEIVED
Milw. County Dept. of Public Works
OCT 2 2 1998
Environmental Services Div.

October 20, 1998

Mr. Lloyd J. Mlejnek, P.E. Project Engineer
Courthouse Annex
907 North 10th Street
Milwaukee, WI 53233

RE: Doyne Park Landfill Condensate Removal

Dear Mr. Mlejnek:

The Milwaukee Metropolitan Sewerage District has reviewed your request to dispose of landfill gas pipe condensate at the Doyne Park Landfill. The District understands that this condensate will be collected from two tanks constructed as part of the site's gas remediation system. This condensate will be hauled to a sanitary sewer for disposal. The expected volumes are approximately 4000 gallons per removal event, four times a year.

Your request for the disposal of this condensate is hereby approved with the following conditions:

1. The County shall comply with all local limits, (Rules and Regulations enclosed).
2. The District should be notified 48 hours prior to discharge.
3. Chemical analysis and volumes must be provided to the District each time the condensate tanks are discharged to the manhole. A composite sample of the two condensate tanks is acceptable for analysis.
4. Permission from the City of Milwaukee is needed to discharge through their manhole.

If you have any questions, please contact Georgia Sinn at 225-2157.

Sincerely,

Joseph R. Grinker

Joseph Grinker, P.E.
Manager of Industrial Waste and
Conveyance Monitoring

JG:gtk:5415F.wp

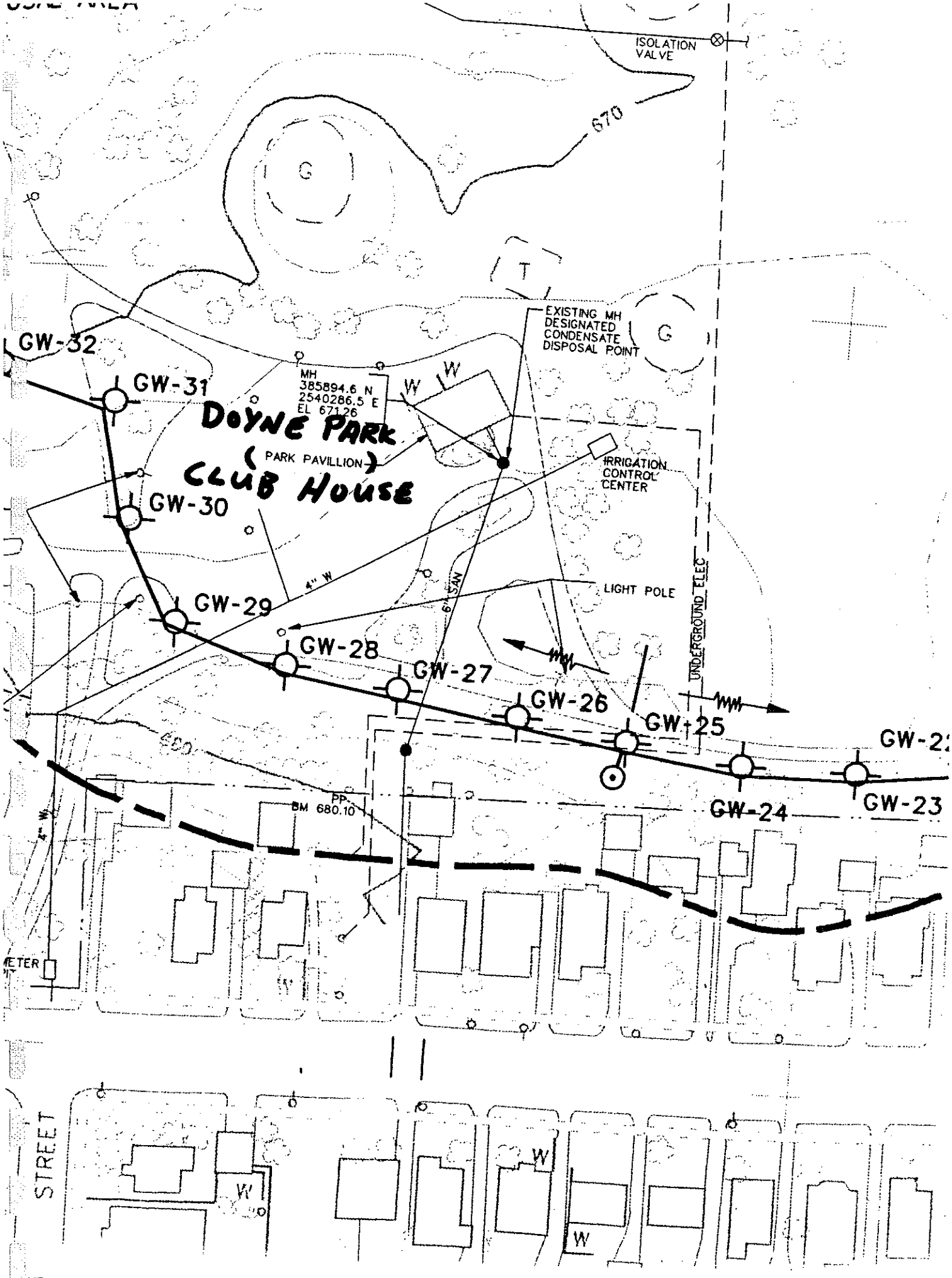
ISOLATION VALVE
670
G
T
G
EXISTING MH DESIGNATED CONDENSATE DISPOSAL POINT
GW-32
GW-31
MH
385894.6 N
2540286.5 E
EL 671.26
W
W
DOYNE PARK
(PARK PAVILLION)
CLUB HOUSE
IRRIGATION CONTROL CENTER
GW-30
4" W
6" SAN
LIGHT POLE
UNDERGROUND ELEC
GW-29
GW-28
GW-27
GW-26
GW-25
GW-2
680
PP
BM 680.10
GW-24
GW-23
4" W
METER
STREET
W
W
W

EARTH TECH℠

A tyco INTERNATIONAL LTD. COMPANY

Printed on recycled paper.