ADDENDUM NUMBER 1

GENERAL MITCHELL INTERNATIONAL AIRPORT
TRAVELERS INFORMATION STATION
Site #290, Bldg. #190
5300 South Howell Avenue
Milwaukee, WI 53207

Project Number: 5041-10006

Date of Addendum: June 30, 2011

This Addendum to the Contract Documents is issued to modify, explain or correct the original documents, dated May 17, 2011, and is hereby made part of the Contract Documents. Acknowledge receipt of this Addendum in the space provided on the Bid Form, or bid may be rejected.

BIDDING AND CONTRACT DOCUMENTS

1. Specifications Section – Telecommunications Cabling System
   a. CLARIFICATION: Warranty Requirements, Item 7A, Page 7, per GMIA staff:
      i. "GMIA IT staff is open to companies other than Ortronics that guarantee the product for a minimum of 25 years. Ortronics remains the preferred brand for this installation and remains the basis-of-design."

2. General Item: Parking will be addressed after bidding at the pre-construction meeting.

3. General Electrical Item: Copper and Fiber cabling will be required. Fiber for the switch and copper for the telephone and fax.

4. Pre-bid meeting attendance list is attached.

DRAWINGS

1. Sheet A100 – Floor Plan and Reflected Ceiling Plan
   a. REVISE: 3/A100 Reflected Ceiling Plan per attached reissued Sheet A100.

2. Sheet A101 – Interior and Exterior Casework Elevations
   a. REVISE: 1/A101 Elevation per attached reissued Sheet A101.
   b. REVISE: 2/A101 Elevation per attached reissued Sheet A101.
   c. REVISE: 3/A101 Elevation per attached reissued Sheet A101.
   d. REVISE: 4/A101 Elevation per attached reissued Sheet A101.
   e. REVISE: 5/A101 Elevation per attached reissued Sheet A101.
   f. REVISE: 6/A101 Elevation per attached reissued Sheet A101.

3. Sheet A102 – Casework Sections and Material Schedules
   a. ADD: Materials Schedule.

4. Note revised Drawings are also available on the Milwaukee County Web site as follows:

   http://county.milwaukee.gov/ConstructionBidsandR23075/GMIA---Travelers-Information-S.htm

End of Addendum No. 1

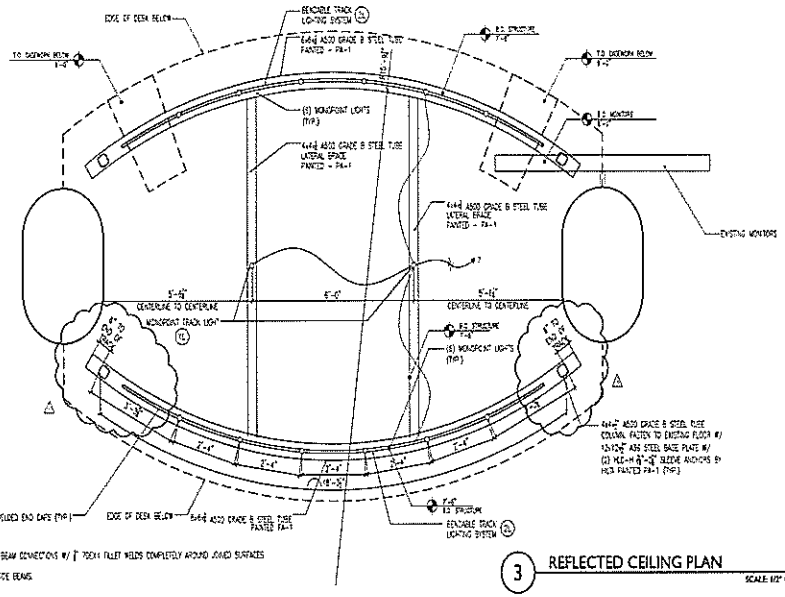

GENERAL STRUCTURAL NOTES:
1. WELD ALL COLUMN TO PLATE CONNECTIONS AND BEAM CONNECTIONS W/ 3/16" 70EXX FILLET WELDS COMPLETELY AROUND JOINED SURFACES
2. PROVIDE END PLATES FOR CURVED TUBES.
3. PROVIDE END PLATES ON THE MAIN BEAM AND SIDE BEAMS.

3 REFLECTED CEILING PLAN
SCALE: 1/2" = 1'-0"

LIGHTING FIXTURE - SYMBOLS LEGEND

- RECESSABLE TRACK LIGHTING SYSTEM
- TRACK LIGHTING FIXTURES
- LED ROPE LIGHT

LIGHTING LAYOUT - KEYED NOTES

1. BRUCK CAT. #CM220mc - 4" SURFACE MOUNT CANOPY - MATTE CHROME, 75W TRANSFORMER AND 20W/270mc PERD SPOT - TRACK HEAD MATTE CHROME, 3/4" ARM LAMP W/ 50W/12V/MR16 (1,000 HR LIFE)
2. BRUCK CAT. #140120mc RECESSABLE TRACK - MATTE CHROME, 12 FT W/ (3) 140/90mc MATTE CHROME END CAPS, #140180mc PERD CEILING SUPPORTS MATTE CHROME, 3/4" - SPACED APPROX. EVERY 3FT, #CM220mc 300W TRANSFORMER - MATTE CHROME/ 10FT TRACK, #140304mc POWER FEED TO TRACK - MATTE CHROME, #20207mc PERD SPOT TRACK HEAD - MATTE CHROME, 3/4" ARM LAMP W/ 50W/12V/MR16 (6,000 HR LIFE), #140210mc ADAPTER TO CONNECT TRACK HEAD TO TRACK, MATTE CHROME.
3. BRUCK CAT. #120401 - LED ROPE LIGHT PROVIDE W/ #120114 MOUNTING CLIPS PER MANUFACTURER'S RECOMMENDATIONS.
4. CONTRACTOR TO REMOVE EXISTING ELECTRICAL LINES BACK TO SOURCE.

DEMOLITION - GENERAL NOTES

A. VERIFY ALL DIMENSIONS AND CONDITIONS AT JOB SITE. PORTIONS OF EXISTING CONSTRUCTION MAY HAVE BEEN REMOVED BY OWNER.
B. REMOVE ALL FLOOR FINISHES IN WORK AREA AND CREATE A LEVEL SUBSTRATE FOR NEW WORK, UNLESS NOTED OTHERWISE.
C. DEMOLITION WORK FOR EXISTING STATION IS LIMITED TO ITEMS DESCRIBED & THESE PLANS. REMAINDER OF DEMOLITION WORK NOT IN CONTRACT.
D. MAINTAIN CONTINUOUS UTILITY SERVICE TO ALL SPACES IN THE BUILDING NOT AFFECTED BY THIS WORK. COORDINATE WITH SUPERINTENDENT AND DISRUPTION IN SERVICES REQUIRED TO PERFORM WORK OR TO MODIFY EXISTING PIPING, DUCTWORK OR ANY ASSOCIATED EQUIPMENT PRIOR TO PERFORMING WORK.
E. **CONTRACTOR & SUBCONTRACTOR TO MINIMIZE DEGREE OF DISRUPTION FROM REACTIVE OCCUPANTS WITHIN OVERALL SCOPE OF CONSTRUCTION. DIRECTOR TO BE AT HIGH RISK TO THE LOCALE WITH CONSTRUCTION OF THE WORK STILL AT 24" OC AND HEAVY DUST PROTECTION. PROVIDE CONTINUOUS POLYETHYLENE 1/16" OVER THE DECK AREA. DEGREE OF PARTITION SHOULD BE AT MINIMUM 36" BEYOND THE EXTENTS OF THE DECK.**
F. REMOVE AND RELOCATE DATA WIRES AS INDICATED IN THE DRAWINGS.
G. PATCH EXISTING FLOOR AS REQUIRED.

ELECTRICAL FIXTURE - SYMBOLS LEGEND

- DOUBLE DATA CONNECTION - CAT 6
- QUAD DATA CONNECTION - CAT 6
- DOUBLE PHONE CONNECTION - CAT 6
- DIRECT CONNECT - VERIFY CONNECTION TYPE WITH SUPPLIER
- 110v OUTLET
- 110v QUAD OUTLET
- CIRCUIT # (SEE GENERAL NOTE C)

ELECTRICAL LAYOUT - GENERAL NOTES

A. ALL DATA CABLES TO BE RUN BACK TO EXISTING COMMUNICATIONS CLOSET (ROOM 244)
B. COORDINATE ALL FIXTURE LOCATIONS WITH PROJECT MANAGER AND ELECTRICAL EQUIPMENT SUPPLIERS.
C. CIRCUIT NUMBERS ARE SHOWN FOR CIRCUITING REFERENCE ONLY. ELECTRICAL CONTRACTOR TO DETERMINE THE AVAILABILITY OF SPARE AND EXISTING CIRCUITS.
D. ALL WORK TO BE COORDINATED WITH THE DATA ELECTRICAL SUPERVISOR. SEE SPECIFICATIONS FOR MORE INFORMATION.
E. ELECTRICAL CONTRACTOR TO CONFIRM CONNECTION REQUIREMENTS FOR MONITOR ARM BRACKET WITH DATA DEPT. AND FURNISH ALL REQUIREMENTS.
F. ALL WIRING AND CONDUITS TO BE CONCEALED FROM VIEW WHERE POSSIBLE.

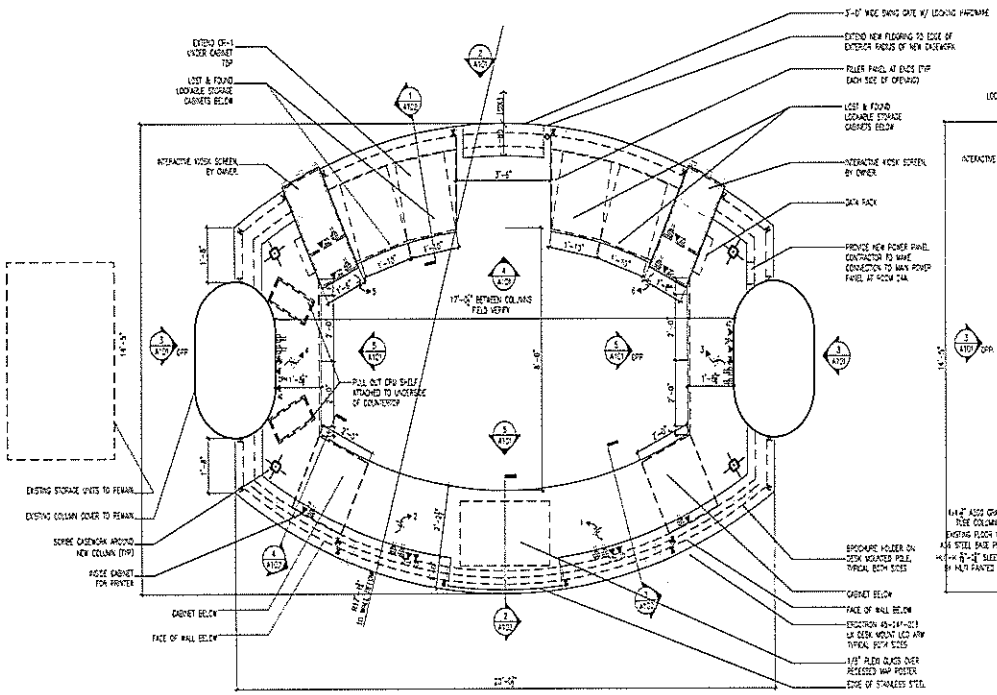

2 FLOOR PLAN
SCALE: 1/2" = 1'-0"

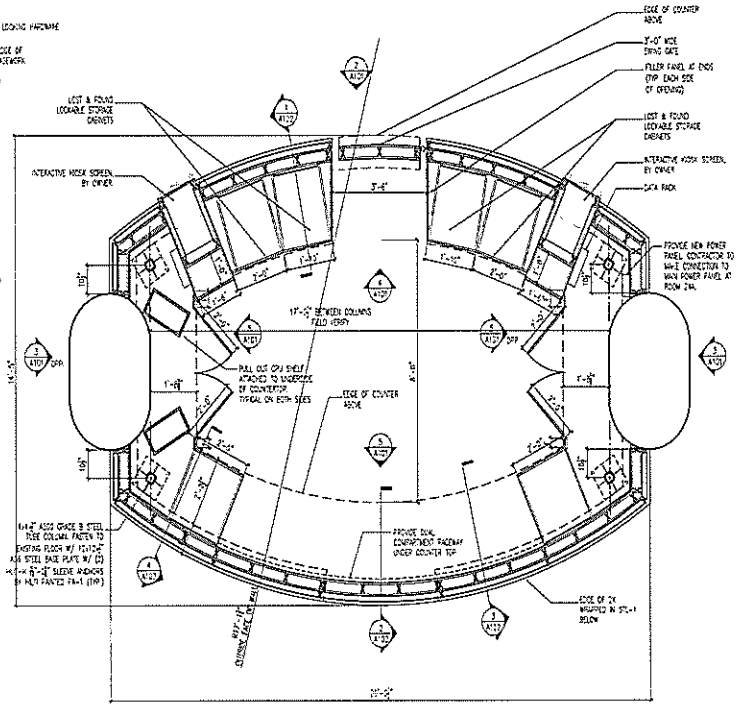

1 FLOOR PLAN
SECTION CUT
SCALE: 1/2" = 1'-0"

BARRIENTOS
DESIGN ARCHITECTS ENGINEERS
1000 N. WATER STREET, STE 503
MILWAUKEE, WI 53202
T: 414-271-1812
F: 414-271-1830

General Mitchell International Airport
Traveler's Aid Station
5300 S. Howell Avenue
Milwaukee, Wisconsin 53207

REVISIONS	
06-30-2011	Addendum 1

Copyright 2011 Barrientos Design

Bidding Documents

05-17-2011

Floor Plan and Reflected Ceiling Plan

A100

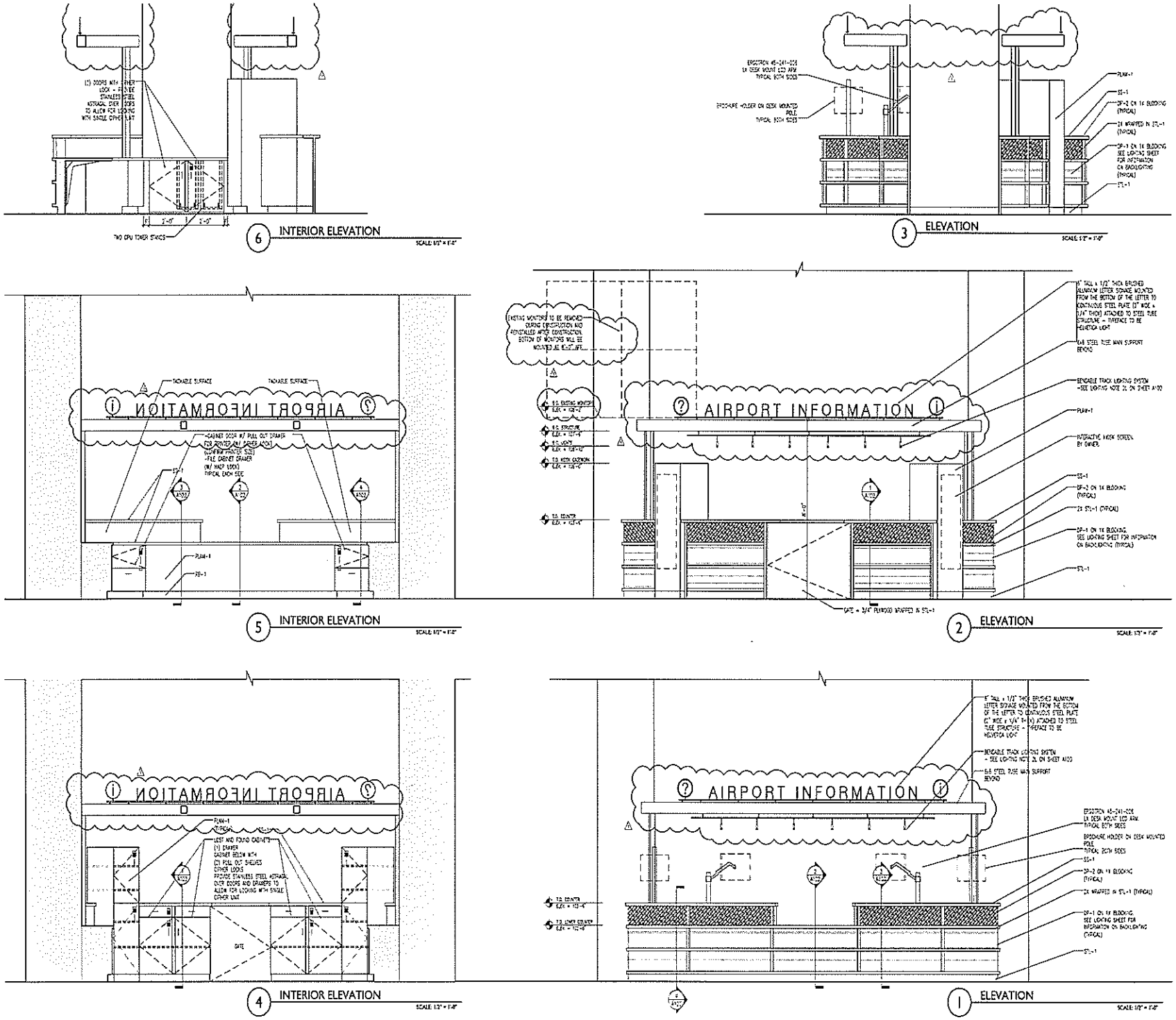

BARRIENTOS
DESIGN ARCHITECTS ENGINEERS
205 W. HIGHLAND AVE. STE 303
MILWAUKEE, WI 53203
T: 414-271-1812
F: 414-271-1630

General Mitchell International Airport
Traveler's Aid Station
5300 S. Howell Avenue
Milwaukee, Wisconsin 53207

Bidding Documents

5041-10006

05-17-2011

Interior and Exterior Casework Elevations

A101

MATERIALS SCHEDULE

Material ID	Material Name	Product Name and Number	Manufacturer
Division 06 - Wood, Plastics, and Composites			
SS-1	Solid Surfacing Material	Silver Corvet K3 0585 - Polished Finish	Avonite
Division 09 - Finishes			
CR-1	Cork Rubber Flooring	JA Cork - Charcoal	Expanko
RB-1	Resilient Base	Color to Match Existing	Armstrong
TS-1	Transition Strip	VT0 - Shadow Gray	Armstrong
DP-1	Translucent Resin Panels*	Varm Cl Color Style: Thunder + Thunder + Gloss Finishes: Sandstone (front), Sandstone (back) Gauge: 1/4"	Vlarm
DP-2	Translucent Resin Panels*	Varm Ecorpan Style: Stonck Pure Finishes: Sandstone (front), Sandstone (back) Gauge: 1/4"	Vlarm
PLAM-1	Plastic Laminate	DecoNeuk H2178 Brushed Stainless Steel	Formica
STL-1	Stainless Steel Cladding	16 gauge stainless steel sheet with no.3 finish	
TW-1	Textable Wallcovering	04 Stone	Wallcovers
PA-1	Paint	SW 6256 - Serious Gray	Sherwin Williams

* Translucent Resin Panels to be attached to substrate by use of clear anodized aluminum channels with concealed fasteners.

1

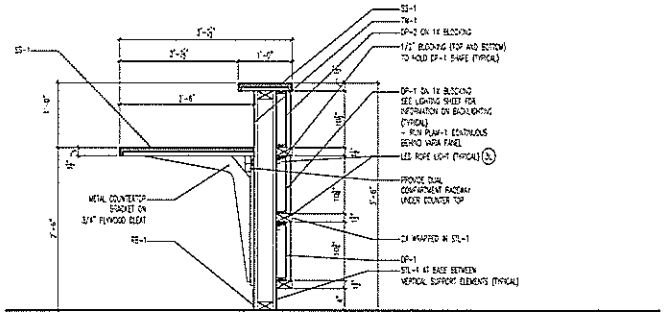

3 SECTION

SCALE 1" = 1'-0"

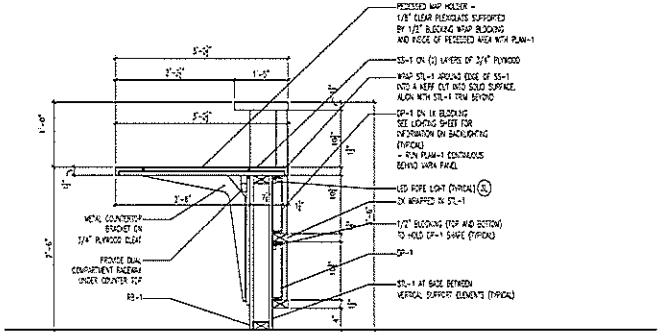

2 SECTION

SCALE 1" = 1'-0"

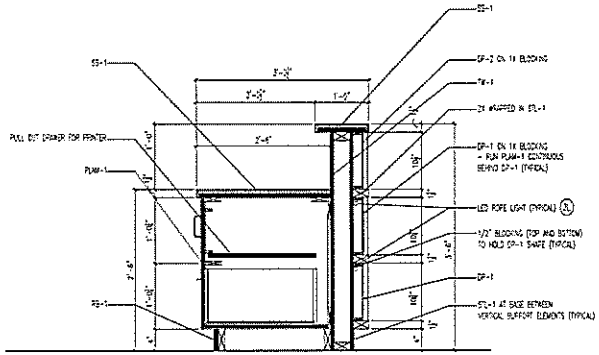

4 SECTION

SCALE 1" = 1'-0"

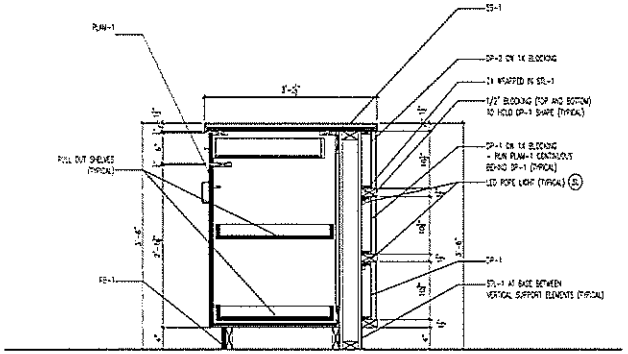

1 LOST AND FOUND CABINET SECTION

SCALE 1" = 1'-0"

INTERIOR ELEVATIONS - GENERAL NOTES

A. INTERIOR ELEVATION DIMENSIONS ARE BASED ON FACE OF FINISHED WALL TO FACE OF FINISHED WALL.

CASEWORK - GENERAL NOTES

A. REFER TO ROOM FINISH AND MATERIAL SCHEDULE FOR PLASTIC LAMINATE SELECTIONS.
B. PROVIDE BASE AS LISTED IN ROOM FINISH SCHEDULE AT ALL CASEWORK.
C. PROVIDE GROMMETS IN CASEWORK COUNTERTOPS WHEREVER ELECTRICAL OR COMMUNICATIONS OUTLETS ARE INDICATED IN AREA SPACE BELOW. VERIFY LOCATIONS IN FIELD WITH OWNER.
D. ROUND ALL EXTERIOR CORNERS OF COUNTERTOPS WITH MINIMUM 1" RADIUS UNLESS NOTED OTHERWISE.
E. PROVIDE 1-1/8" (MINIMUM) FILLERS AT PERPENDICULAR JUNCTION OF ALL CABINETS AND AT PERPENDICULAR JUNCTURE WITH ADJACENT WALL(S), UNLESS NOTED OTHERWISE. SQUARE ALL EDGES AND APPLY SEALANT TO JOINTS.
F. ALL SHELVING IN CASEWORK TO BE ADJUSTABLE UNLESS NOTED OTHERWISE.
G. ALL FILE CABINETS TO ACCOMMODATE PENDAFLEX FILE SYSTEM.
H. PROVIDE TYPICAL CASEWORK LOCKS AT ALL DRAWERS AND CABINETS.

LIGHTING FIXTURE - SYMBOLS LEGEND

- BENDABLE TRACK LIGHTING SYSTEM
- TRACK LIGHTING FIXTURES
- LED ROPE LIGHT

LIGHTING LAYOUT - KEYED NOTES (A)

1. BRUCK CAT. #140205mc - 4" SURFACE MOUNT CANOPY - MATTE CHROME. 75VA TRANSFORMER AND #320870mc FEED SPOT - TRACK HEAD MATTE CHROME, 35 WM LAMP W/ SOURCE/LIFE/LIFE (8000 HR LIFE)
2. BRUCK CAT. #140203mc BENDABLE TRACK - MATTE CHROME, 12 FT W/ (2) 142190mc MATTE CHROME END CAPS, #142180mc FIXED CEILING SUPPORTS MATTE CHROME, 3" - SPACED APPROX. EVERY 3FT. #142300mc 300W TRANSFORMER - MATTE CHROME/ 12FT TRACK. #140304mc POWER FEED TO TRACK - MATTE CHROME, #320870mc FEED SPOT TRACK HEAD - MATTE CHROME, 35 WM LAMP W/ SOURCE/LIFE/LIFE (8000 HR LIFE). #140306mc ADAPTER TO CONNECT TRACK HEAD TO TRACK, MATTE CHROME
3. BRUCK CAT. #120421 - LED ROPE LIGHT. PROVIDE W/ #120914 MOUNTING CLIPS PER MANUFACTURER'S RECOMMENDATIONS
4. CONTRACTOR TO REMOVE EXISTING ELECTRICAL WIRES BACK TO SOURCE.

BARRIENTOS
DESIGN | ENGINEERS | BUILDERS
2028 W. HIGHLAND AVE. S.1E 203
MILWAUKEE, WI 53203
T: 414-271-1842
F: 414-271-1830

General Mitchell International Airport
Traveler's Aid Station
5300 S. Howard Avenue
Milwaukee, Wisconsin 53207

06-30-2011	Addendum 1

Copyright 2011 Barrientos Design

The drawings, specifications, and other documents, including electronic documents, prepared by Barrientos Design, Inc. are instruments of service and shall remain the property of Barrientos Design. The owner agrees to indemnify and hold harmless the Barrientos Design, Inc. for any damages, liability or cost, including reasonable attorney's fees and defense costs, arising or allegedly resulting from any changes or modifications to these documents made by anyone other than Barrientos Design, Inc., or from any reuse of these documents on extensions of the project or on any other project not provided by or otherwise contracted for with Barrientos Design, Inc.

Bidding Documents

5341-10006

05-17-2011

Casework Sections and Material Schedule

A102

Project: Traverse Aid Station.. 5041-10006

Pre. Bid. MEETING ATTENDANCE LIST 6/22/11 10:00 A.M.

Firm		tel.	E. Mail.
Dylan Lienhardt	Miron Construction	920-969-7041	estimating@miron-construction.com
CC&N	Ted Jaekels	262-951-4107	tjaekels@cc-n.com
GMIA Security	Mike Keegan	414-747-4535	mkeegan@mitchellairport.com
GMIA-OPS	Kathie David	414-747-4658	kdavid@mitchellairport.com
~~Joe Podewi~~			
DNESCO	Joe Podewils	414 425 3700	jpodewils@dnesco.com
Platt	Charlie Sparks		CharlieS@Plattcol.net
Platt	Todd Czarnecki		Todd@Plattcol.net
GMIA	Nancy Kelly		
Wm. Sackerson Const.	Neil Sackerson	414-769-0088	Sackerson@SBCgbbal.net
Burkhart Const.	John Ordway	262-783-4333	John@burkhartconstruction.com
Rick Lichman	Mohns Inc.	262-522-6585	Rick@mohnsincorporated.com
p.			
Joe Marchewka	GMIA Maint.	414 747 5324	jmarchewka@mitchellairport.com
Ryan Thacker	Barrientos	414 271-1812x4	rthacker@barrientosdesign.com
Bernie Mielcarli	DPW/AFE	414 278.3897.	Milwaukee