MATERIALS SCHEDULE

Material ID	Material Name	Product Name and Number	Manufacturer
Division 06 - Wood, Plastics, and Composites			
SS-1	Solid Surfacing Material	Silver Comet K3-8585 - Polished Finish	Avonite
Division 09 - Finishes			
CR-1	Cork Rubber Flooring	XRC3- Charcoal	Expanko
RB-1	Resilient Base	Color to Match Existing	Armstrong
TS-1	Transition Strip	VT0 - Shadow Gray	Armstrong
DP-1	Translucent Resin Panels*	Varia C3 Color	3form
		Style: Thunder + Thunder + Ghost	
		Finishes: Sandstone (front), Sandstone (back)	
		Gauge: 1/4"	
DP-2	Translucent Resin Panels*	Varia Ecoresin	3form
		Style: Struck Pure	
		Finishes: Sandstone (front), Sandstone (back)	
		Gauge: 1/4"	
PLAM-1	Plastic Laminate	DecoMetal: M2178 Brushed Stainless Steel	Formica
STL-1	Stainless Steel Cladding	16 gauge stainless steel sheet with no. 3 finish	
TW-1	Tackable Wallcovering	04 Stone	Walltalkers
PA-1	Paint	SW 6256 - Serious Gray	Sherwin Williams

* Translucent Resin Panels to be attached to substrate by use of clear anodized aluminum channels with concealed fasteners.

1

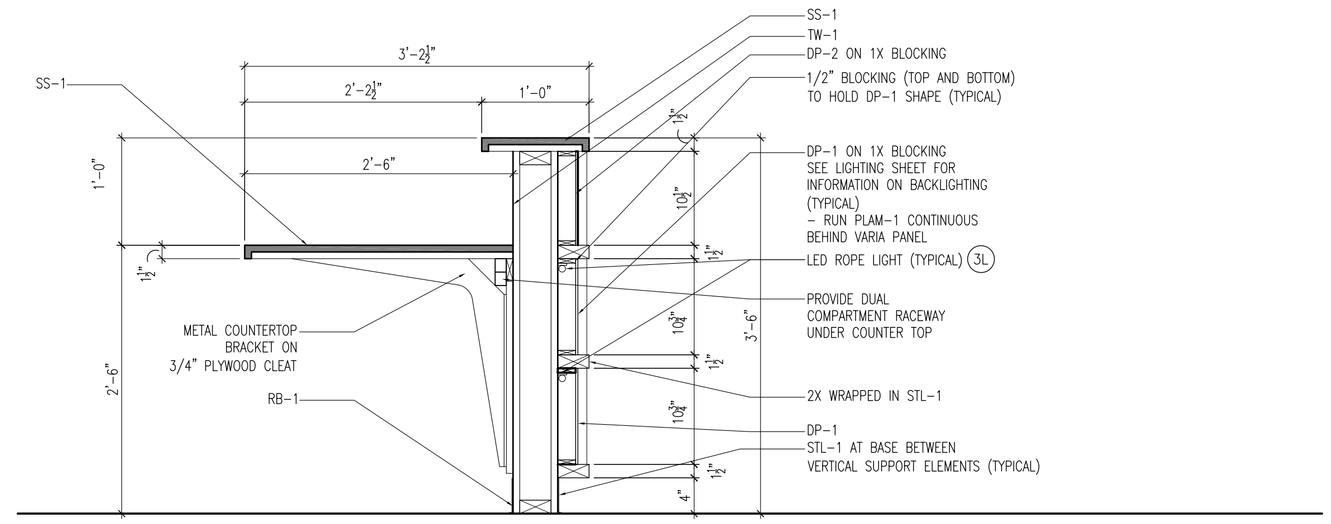

3 SECTION

SCALE: 1" = 1'-0"

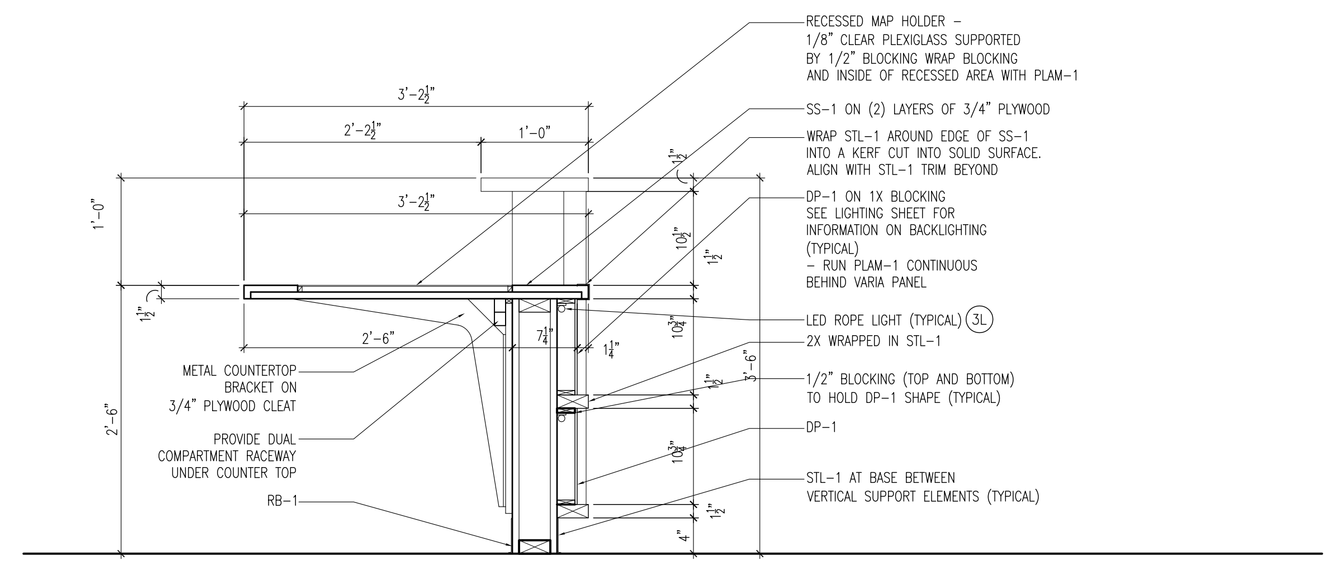

2 SECTION

SCALE: 1" = 1'-0"

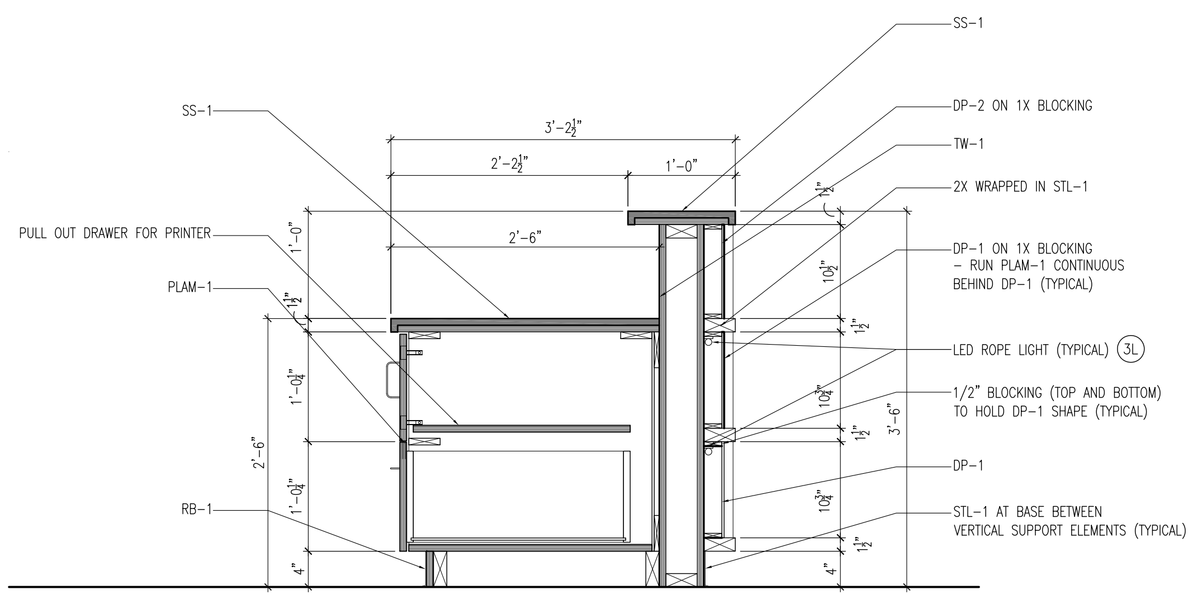

4 SECTION

SCALE: 1" = 1'-0"

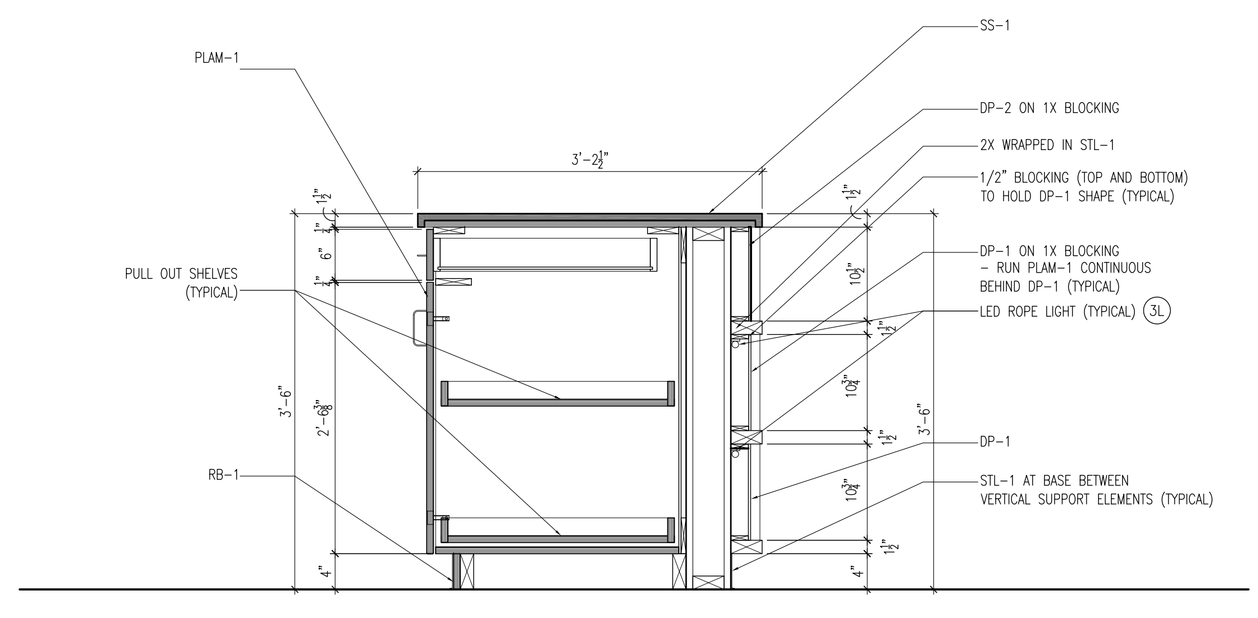

1 LOST AND FOUND CABINET SECTION

SCALE: 1" = 1'-0"

INTERIOR ELEVATIONS – GENERAL NOTES

A. INTERIOR ELEVATION DIMENSIONS ARE BASED ON FACE OF FINISHED WALL TO FACE OF FINISHED WALL.

CASEWORK – GENERAL NOTES

A. REFER TO ROOM FINISH AND MATERIAL SCHEDULE FOR PLASTIC LAMINATE SELECTIONS.
B. PROVIDE BASE, AS LISTED IN ROOM FINISH SCHEDULE AT ALL CASEWORK.
C. PROVIDE GROMMETS IN CASEWORK COUNTERTOPS WHEREVER ELECTRICAL OR COMMUNICATIONS OUTLETS ARE INDICATED IN KNEE SPACE BELOW. VERIFY LOCATIONS IN FIELD WITH OWNER.
D. ROUND ALL OUTSIDE CORNERS OF COUNTERTOPS WITH MINIMUM 1" RADIUS UNLESS NOTED OTHERWISE.
E. PROVIDE 1-1/2" (MINIMUM) FILLERS AT PERPENDICULAR JUNCTION OF ALL CABINETS AND AT PERPENDICULAR JUNCTURE WITH ADJACENT WALL(S), UNLESS NOTED OTHERWISE. SCRIBE ALL EDGES AND APPLY SEALANT TO JOINTS.
F. ALL SHELVING IN CASEWORK TO BE ADJUSTABLE UNLESS NOTED OTHERWISE.
G. ALL FILE CABINETS TO ACCOMMODATE PENDAFLEX FILE SYSTEM.
H. PROVIDE TYPICAL CASEWORK LOCKS AT ALL DRAWERS AND CABINETS.

LIGHTING FIXTURE – SYMBOLS LEGEND

BENDABLE TRACK LIGHTING SYSTEM

TRACK LIGHTING FIXTURES

LED ROPE LIGHT

LIGHTING LAYOUT – KEYED NOTES (#L)

1. BRUCK CAT. #240205mc – 4" SURFACE MOUNT CANOPY – MATTE CHROME, 75VA TRANSFORMER AND #220670mc PERO SPOT – TRACK HEAD MATTE CHROME, 3/8" ARM LAMP W/ 50MRC16/NFL24 (6,000 HR LIFE)
2. BRUCK CAT. #140012mc BENDABLE TRACK – MATTE CHROME, 12 FT W/ (2) 140190mc MATTE CHROME END CAPS. #140180mc RIGID CEILING SUPPORTS MATTE CHROME, 3/4" – SPACED APPROX. EVERY 3FT, #240320mc 300W TRANSFORMER – MATTE CHROME/ 12FT TRACK, #140304mc POWER FEED TO TRACK – MATTE CHROME, #220670mc PERO SPOT TRACK HEAD – MATTE CHROME, 3/8" ARM LAMP W/ 50MRC16/NFL24 (6,000 HR LIFE), #140360mc ADAPTER TO CONNECT TRACK HEAD TO TRACK, MATTE CHROME.
3. BRUCK CAT. #135401 – LED ROPE LIGHT. PROVIDE W/ #135914 MOUNTING CLIPS PER MANUFACTURER'S RECOMMENDATIONS.
4. CONTRACTOR TO REMOVE EXISTING ELECTRICAL LINES BACK TO SOURCE.

BARRIENTOS
DESIGN ARCHITECTS ENGINEERS
205 W. HIGHLAND AVE. STE 303
MILWAUKEE, WI 53203
T: 414-271-1812
F: 414-271-1830

CONSULTANT

PROJECT TITLE AND LOCATION

General Mitchell International Airport
Traveler's Aid Station
5300 S. Howell Avenue
Milwaukee, Wisconsin 53207

REVISIONS

1 06-30-2011 Addendum 1

Copyright 2011 Barrientos Design

This drawing and/or content is not to be reproduced, changed, copied or assigned to any third party in any form or manner without first obtaining the expressed written consent of Barrientos Design. The user agrees to indemnify and hold the Architect harmless from any damages, liability, or cost, including attorney's fees and costs of defense resulting from any changes or modifications made by anyone other than the Architect. The Owner or owner's agent shall also hold harmless the Architect from any reuse of the drawings or data without the securing written consent of the Architect.

SET TYPE
Bidding Documents

MILWAUKEE COUNTY PROJECT NUMBER
5041-10006

DATE
05-17-2011

SHEET TITLE
Casework Sections and Material Schedule

SHEET
A102