ADDENDUM NUMBER 2

MILWAUKEE COUNTY
ZOOLOGICAL GARDENS
WEST ENTRANCE COMPLEX AND OTTER EXHIBIT
CONTRACT #3 - CONCRETE
Site #355, Bldg. #4721, #4722, #4723, #4724
10001 West Blue Mound Road
Milwaukee, WI 53226

Project Number: Z150-14453 & Z150-14455 -03

Notice Number: 7115

Date of Addendum: June 8, 2016

This Addendum to the Contract Documents is issued to modify, explain or correct the original documents, dated August 25, 2015, and is hereby made part of the Contract Documents. Acknowledge receipt of this Addendum in the space provided on the Bid Form, or bid may be rejected.

BIDDING, CONTRACT DOCUMENTS AND DRAWINGS

CONTRACT 3, 3A & 3B BIDDING ADDENDUM 2:
Contract 3, 3A & 3B bidding Addendum 2 consists of revisions issued as Design Addendum D which is attached to this addendum. In accordance of the instructions and sketches included in the addendum revise respective items shown on bid set drawings.

End of Addendum No. 2

ADDENDUM D

**ZOO NEW WEST ENTRANCE & OTTER EXHIBIT**

FOR

**Milwaukee County Zoo**

June 2, 2016

ARCHITECT
**PECKHAM GUYTON ALBERS & VIETS, INC.**
200 NORTH BROADWAY, SUITE 1000
ST. LOUIS, MO 63102
(314) 231-7318

This Addendum forms a part of the Contract Documents and modifies the Bidding Documents dated August 25, 2015 as noted below. This Addendum consists of five (5) total pages and attachments indicated. Each Bidder shall acknowledge on the Form of Proposal his receipt of this Addendum. Failure to do so may constitute non-conformity in the bid.

**FORMAT**

A. Revisions to Project Manual:
   1. Revisions are located and described unless revisions to a Section are extensive, in which case the entire Section is reissued with revisions denoted with a vertical line in the margin.

B. Revisions to Drawings:
   1. Minor revision to existing drawings are located and described below. Where revisions to a Drawing are extensive, the entire Drawing is reissued with revisions denoted.
   2. A revision to a new drawing is indicated with a "cloud" and a lettered revision triangle around the sheet number. The triangle is referenced and dated in the title block.
   3. A revision to an existing drawing is indicated with a "cloud" and a lettered revision triangle. The triangle is referenced and dated in the title block.
   4. Subsequent revisions on previously revised drawings will have only the current revisions "clouded" but the former revision triangle(s) will remain for reference.

| Spec Section No. | Sheet Discipline Prefix | Sheet No. 1 | Sheet No. 2 | Revision Description | Addendum No. | Revision Date | Format | Sketch No. | RFI No. |
|---|---|---|---|---|---|---|---|---|---|
| | S | 71 | 301 | Revised Foundation Plan, Remove C2 from Schedule | D | 6/2/2016 | 8.5x11 | S01 | |
| | S | 71 | 501 | Remove Detail 12, 15, 16, and 18, Revise Detail 4 - refer to sketch S01 for footing sizes | D | 6/2/2016 | | | |
| | S | 72 | 301 | Revised Foundation Plan, Remove | D | 6/2/2016 | 8.5x11 | S02 | |
| | S | 72 | 501 | Revise Detail 8 - refer to sketch S02 for footing sizes | D | 6/2/2016 | | | |
| | S | 72 | 502 | Remove Details 24, 25, and 26 | D | 6/2/2016 | | | |
| | S | 74 | 301 | Revised Foundation Plan | D | 6/2/2016 | 8.5x11 | S03 | |
| | S | 74 | 501 | Revise Detail 4 per Sketch S03, Detail 7 and 8 - ADD #4 dowel bar w/ 24" legs into upper slab. | D | 6/2/2016 | | | |
| | S | 74 | 502 | Add Detail 21 - Refer to S04. | D | 6/2/2016 | 8.5x11 | S04 | |

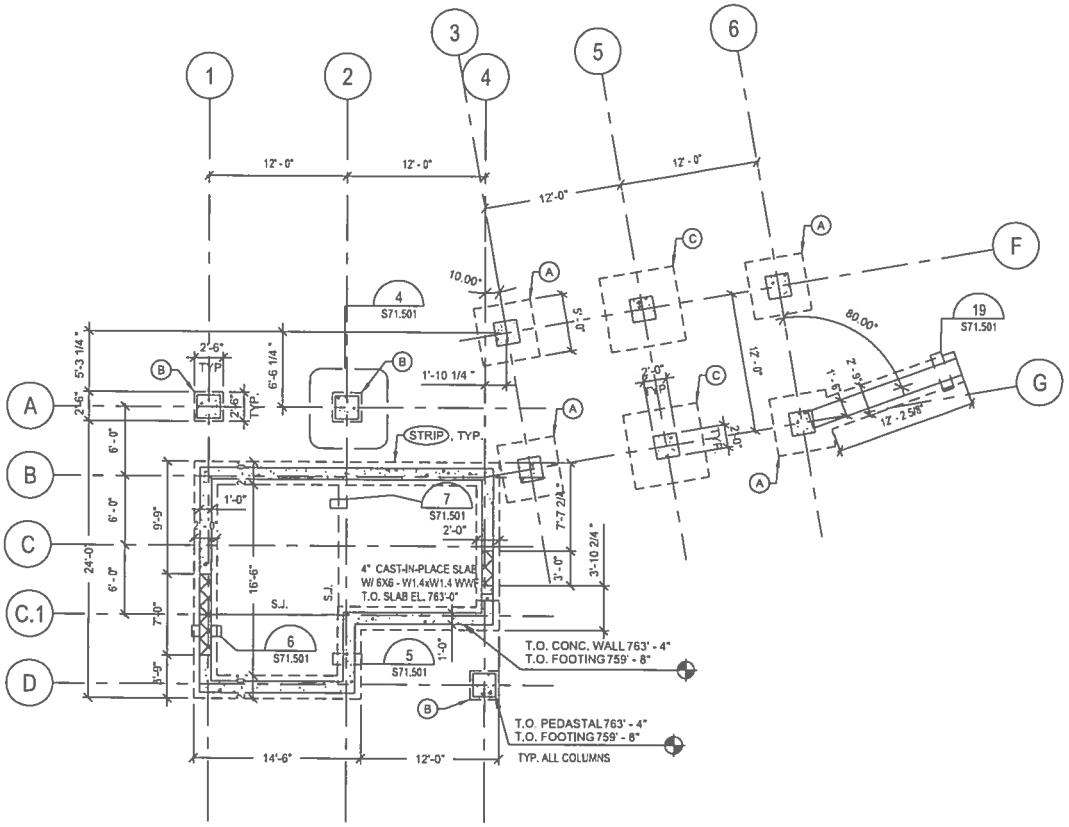


## TICKETING BUILDING - FOUNDATION PLAN

| FOOTING MARK | DESCRIPTION |
|---|---|
| * A | 5'-0" X 5'-0" (NO CHANGE FROM PREVIOUS DETAIL 4/S71.501) |
| * B | 30" X 30" X 12" W/ (3) #5 EACH WAY |
| * C | 6'-6" X 6'-6" X 12" W/ (6) #5 BARS EACH WAY |
| STRIP | 24" X 12" CONTINUOUS FOOTING W/ (3) #5 BARS |

* PEDASTAL PER DETAIL 4/S71.501

= 8" BELOW FINISHED FLOOR

NOTES
-DETAILS TO BE REMOVED FROM S71.501: 12, 15, 16, AND 18.
-COLUMN "C2" TO BE REMOVED FROM COLUMN SCHEDULE ON S71.301

Milwaukee County Dept. of Administrative Services
FACILITIES MANAGEMENT DIVISION
Architectural, Engineering & Environmental Services
CITY CAMPUS 633 W. WISCONSIN AVE., SUITE 1000 MILWAUKEE, WI 53203

**ZOO NEW WEST ENTRANCE & OTTER EXHIBIT**
# MILWAUKEE COUNTY ZOO
**10001 W. BLUEMOUND ROAD, MILWAUKEE, WISCONSIN 53226**

PGAV DESTINATIONS
PECKHAM GUYTON ALBERS & VIETS, INC.
200 North Broadway, Suite 1000, St. Louis, MO 63102
(314) 231-7318 WWW.PGAV.COM

| | | | |
|---|---|---|---|
| PROJECT: Z150-14452 (PHASE 2) Z150-14453 Z150-14455 | SITE NUMBER: 355 | ADD/REV D | ASI/RFI |
| | BUILDING NO: 4271 | DR NLD | CK MB |
| | | DATE 6/2/2016 | JOB NO 75919 |
| | | SCALE 1/16" = 1'-0" | D-S01 |
| | | REFER TO SHEET NO S71.301 | |

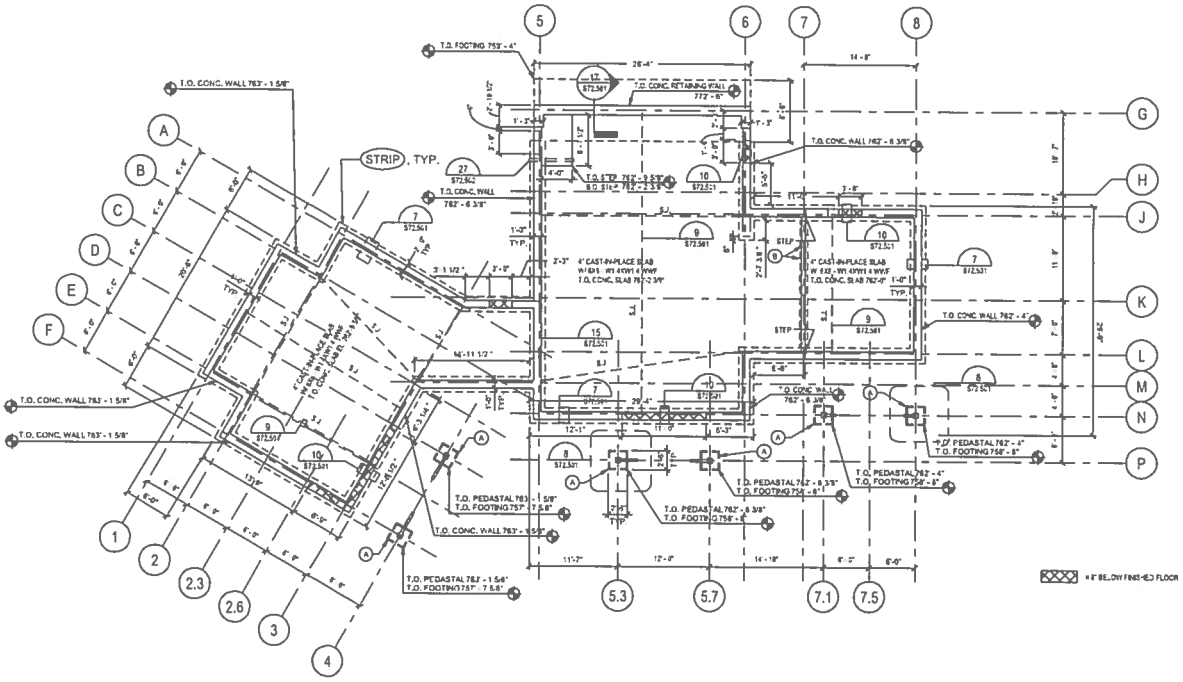


## RETAIL AND RESTROOM BUILDING - FOUNDATION PLAN

| FOUNDATION MARK | DESCRIPTION |
|---|---|
| A | 30" X 30" X 12" FOOTING W/ (3) #5 EACH WAY |
| B | 6" FOUNDATION WALL (W/ 4" CURB) W/ 12" WIDE X 12" DEEP FOOTING |
| STRIP | 24" X 12" CONTINUOUS FOOTING W/ (3) #5 BARS |

* PEDASTAL PER DETAIL 8/S72.501

NOTES
- DETAILS TO BE REMOVED FROM S72.502: 24, 25, 26.
- COLUMN "C2" TO BE REMOVED FROM COLUMN SCHEDULE ON S72.301

Milwaukee County Dept. of Administrative Services
FACILITIES MANAGEMENT DIVISION
Architectural, Engineering & Environmental Services
CITY CAMPUS 633 W. WISCONSIN AVE., SUITE 1000 MILWAUKEE, WI 53203

**ZOO NEW WEST ENTRANCE & OTTER EXHIBIT**
# MILWAUKEE COUNTY ZOO
**10001 W. BLUEMOUND ROAD, MILWAUKEE, WISCONSIN 53226**

PGAV DESTINATIONS
PECKHAM GUYTON ALBERS & VIETS, INC.
200 North Broadway, Suite 1000, St. Louis, MO 63102
(314) 231-7318 WWW.PGAV.COM

PROJECT: Z150-14452 (PHASE 2) Z150-14453 Z150-14455
SITE NUMBER: 355
BUILDING NO: 4272

| | | | |
|---|---|---|---|
| ADD/REV D | ASI/RFI | DR NLD | CK MB |
| DATE 6/2/2016 | | JOB NO 75919 | |
| SCALE 3/64" = 1'-0" | | D-S02 | |
| REFER TO SHEET NO S72.301 | | | |

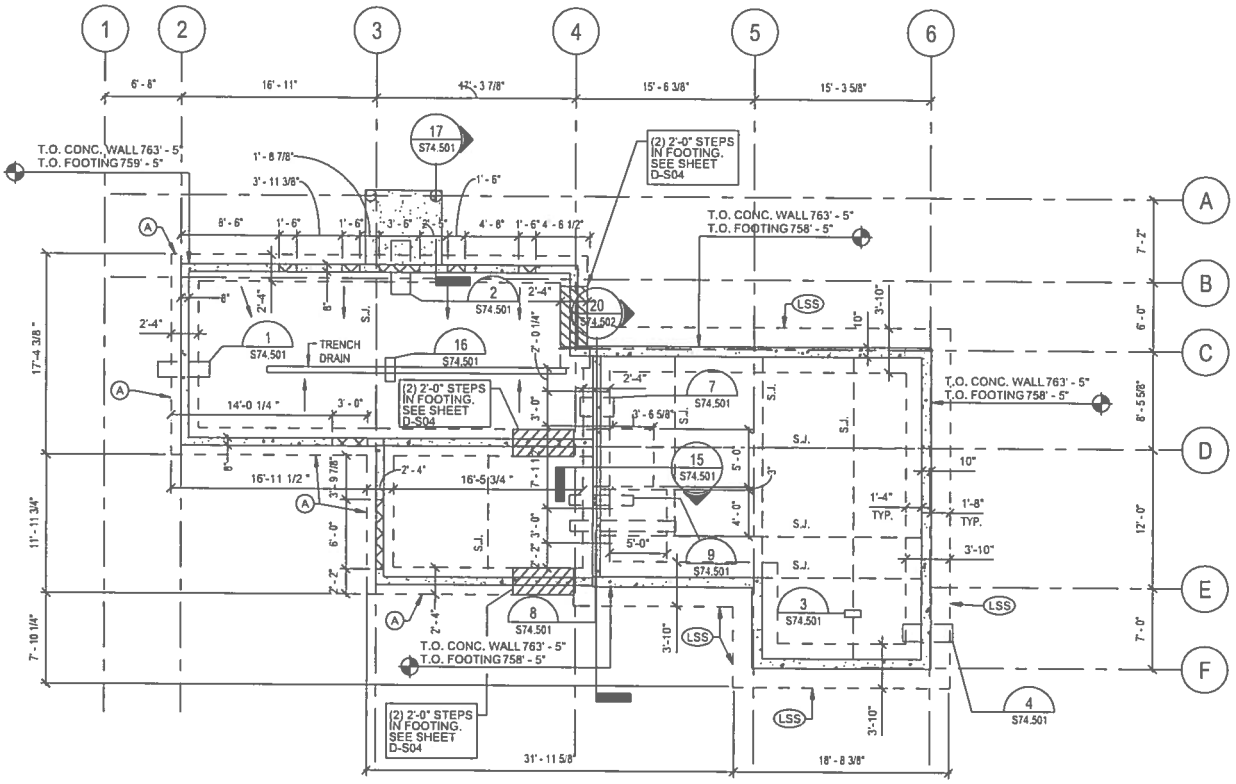


## HOLDING BUILDING - FOUNDATION PLAN

| FOOTING MARK | DESCRIPTION |
|---|---|
| A | 28" X 12" CONTINUOUS FOOTING W/ (4) #4 BARS |
| LSS | 3'-10" RETAINING WALL FOOTING WITH #4 DOWELS (24" LEGS) @ 24" O.C. |

Milwaukee County Dept. of Administrative Services
FACILITIES MANAGEMENT DIVISION
Architectural, Engineering & Environmental Services
CITY CAMPUS 633 W. WISCONSIN AVE., SUITE 1000 MILWAUKEE, WI 53203

**ZOO NEW WEST ENTRANCE & OTTER EXHIBIT**

# MILWAUKEE COUNTY ZOO

**10001 W. BLUEMOUND ROAD, MILWAUKEE, WISCONSIN 53226**

PGAV DESTINATIONS
PECKHAM GUYTON ALBERS & VIETS, INC.
200 North Broadway, Suite 1000, St. Louis, MO 63102
(314) 231-7318 WWW.PGAV.COM

PROJECT: Z150-14452 (PHASE 2) Z150-14453 Z150-14455

SITE NUMBER: 355

BUILDING NO: 4274

| | | | |
|---|---|---|---|
| ADD/REV D | ASI/RFI | DR NLD | CK MB |
| DATE 6/2/2016 | | JOB NO 75919 | |
| SCALE 1/16" = 1'-0" | | D-S03 | |
| REFER TO SHEET NO S74.301 | | | |

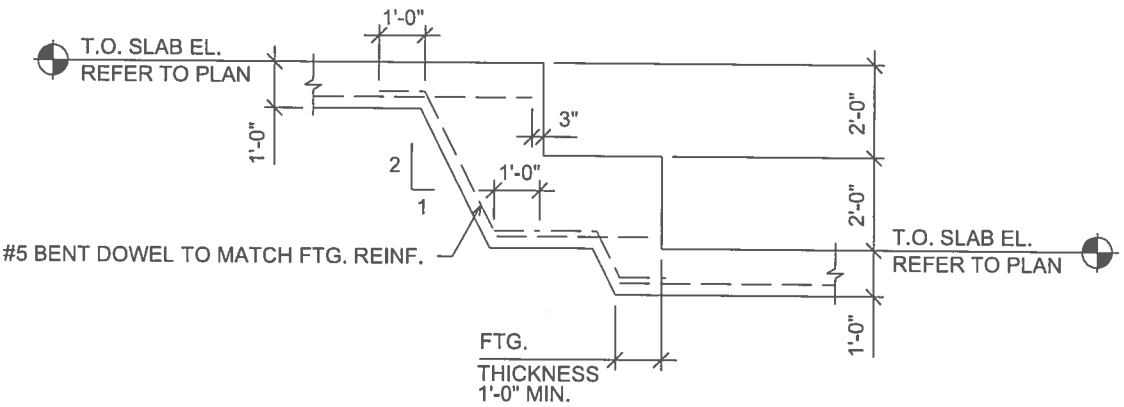


21 STEP IN FOOTING
1/4" = 1'-0"

Milwaukee County Dept. of Administrative Services
FACILITIES MANAGEMENT DIVISION
Architectural, Engineering & Environmental Services
CITY CAMPUS 633 W. WISCONSIN AVE., SUITE 1000 MILWAUKEE, WI 53203

**ZOO NEW WEST ENTRANCE & OTTER EXHIBIT**
# MILWAUKEE COUNTY ZOO
**10001 W. BLUEMOUND ROAD, MILWAUKEE, WISCONSIN 53226**

PGAV DESTINATIONS
PECKHAM GUYTON ALBERS & VIETS, INC.
200 North Broadway, Suite 1000, St. Louis, MO 63102
(314) 231-7318 WWW.PGAV.COM

PROJECT: Z150-14452 (PHASE 2) Z150-14453 Z150-14455
SITE NUMBER: 355
BUILDING NO: 4274

| | | | |
|---|---|---|---|
| ADD/REV D | ASI/RFI | DR NLD | CK MB |
| DATE 6/2/2016 | | JOB NO 75919 | |
| SCALE 1/4" = 1'-0" | | D-S04 | |
| REFER TO SHEET NO S74.502 | | | |