Keynote List

SEE GENERAL DWG INFO. SHEET FOR COMPLETE LIST

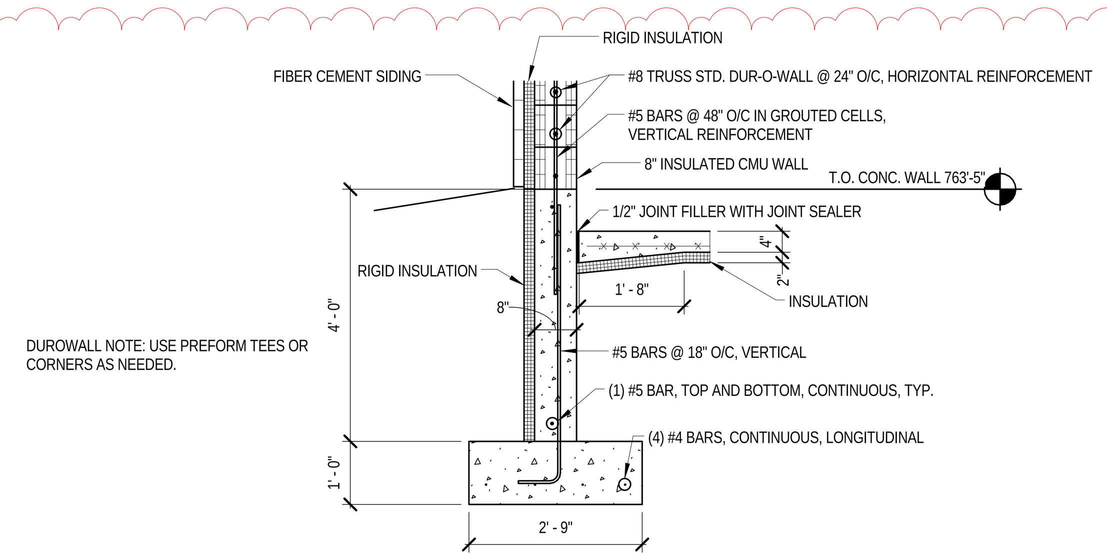

1 KEEPER SECTION TYPICAL WALL, FOUNDATION WALL, AND FOOTING
1/2" = 1'-0"

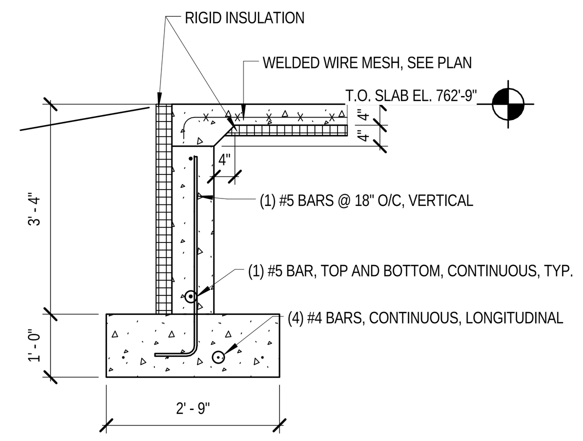

2 KEEPER SECTION FOOTING AT OPENING
1/2" = 1'-0"

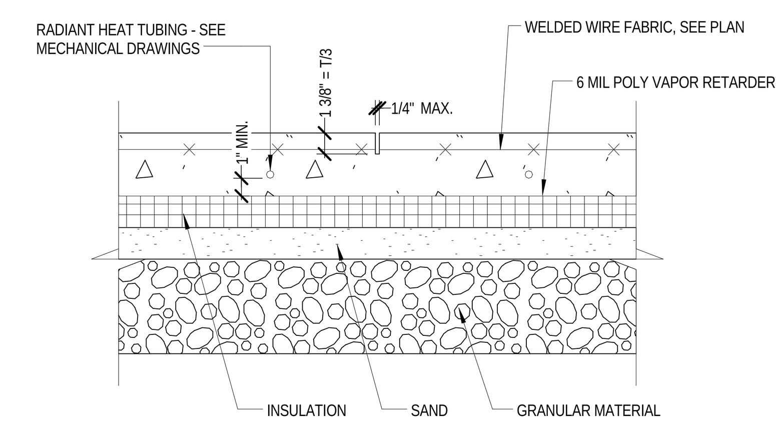

3 TYPICAL SAWCUT JOINT
1 1/2" = 1'-0"

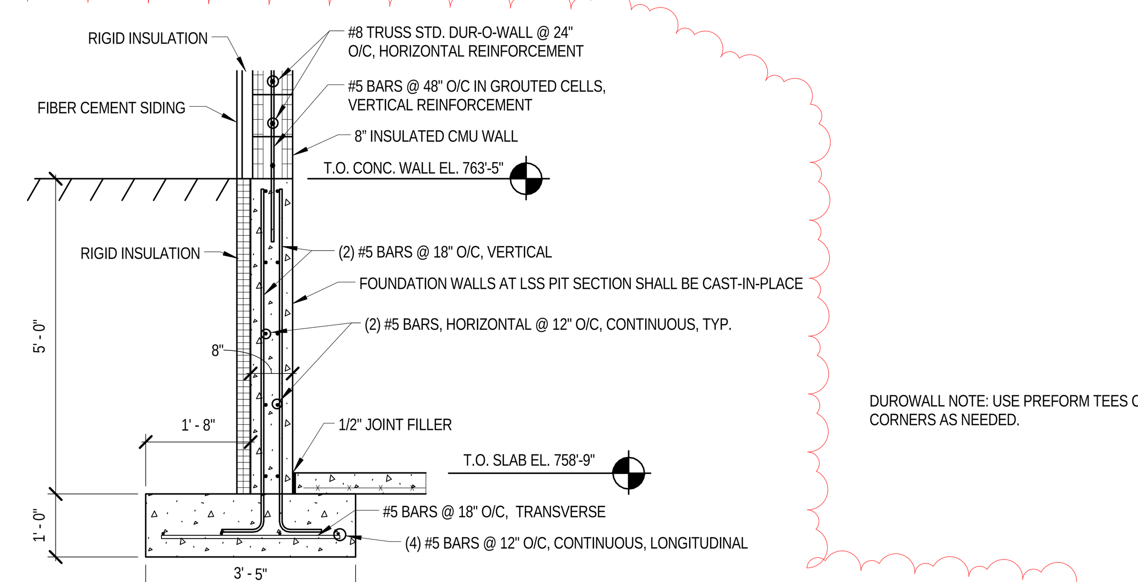

4 LLS PIT SECTION TYPICAL WALL, FOUNDATION WALL, AND FOOTING
1/2" = 1'-0"

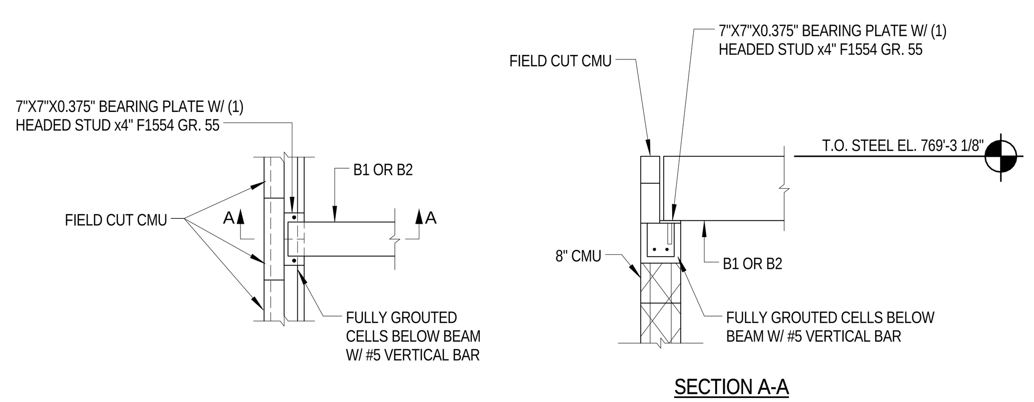

5 STEEL BEAM BEARING ON CMU
1/2" = 1'-0"

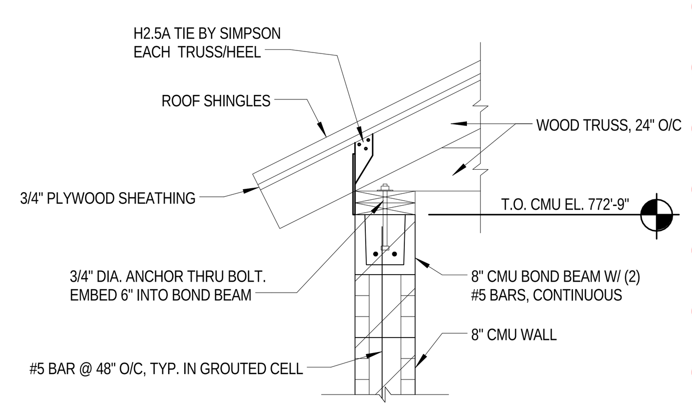

6 TRUSS/CMU CONNECTION
3/4" = 1'-0"

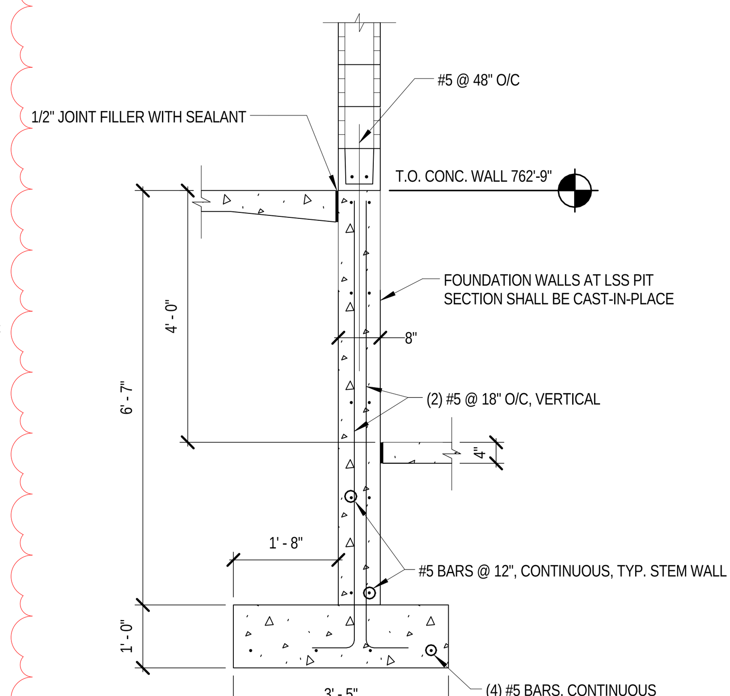

7 INTERIOR FOUNDATION WALL STEP
1/2" = 1'-0"

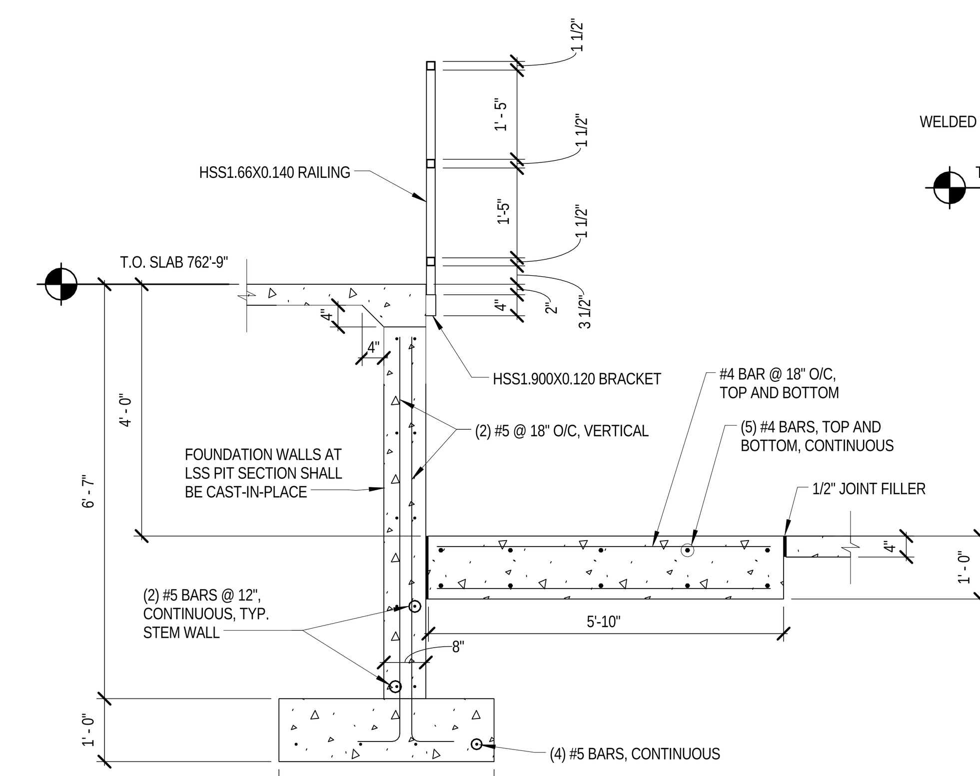

8 INTERIOR FOUNDATION WALL STEP WITH RAIL
1/2" = 1'-0"

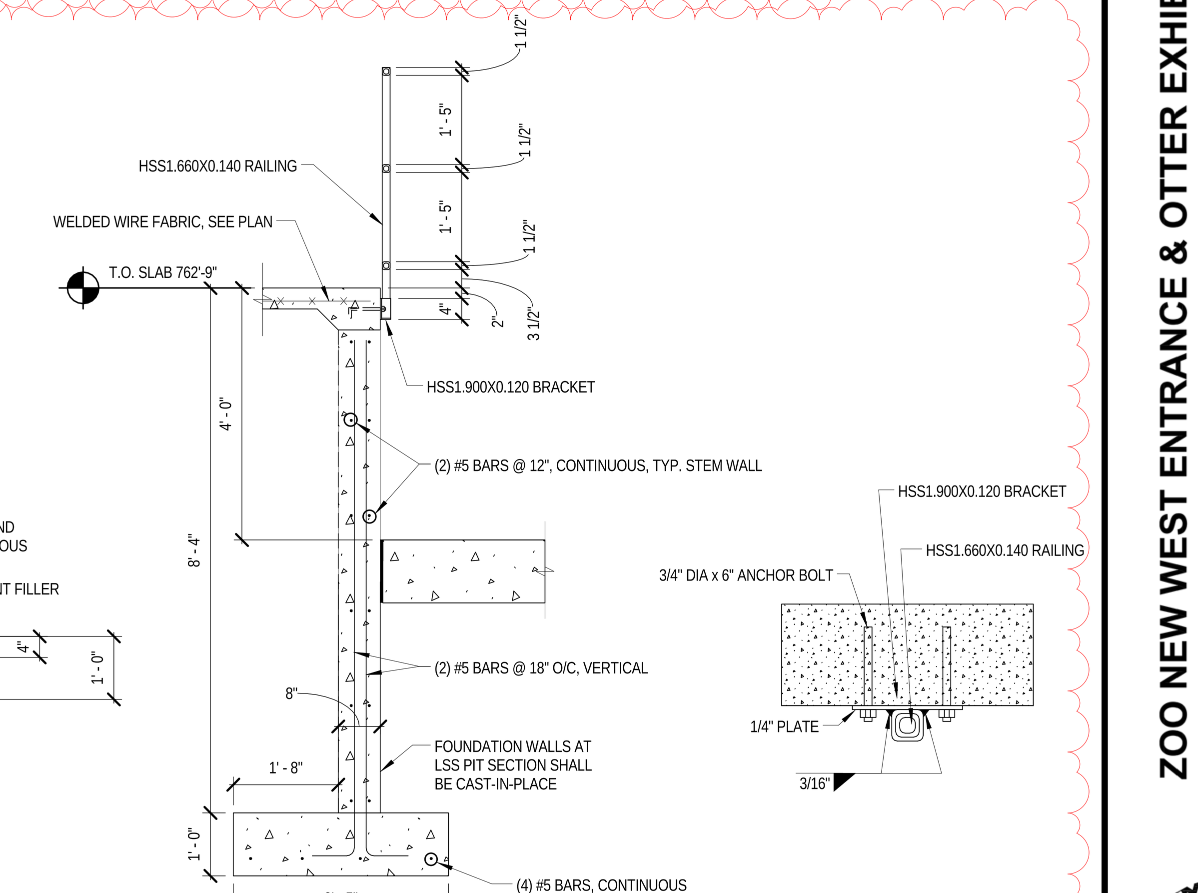

9 INTERIOR FOUNDATION WALL STEP AT CRANE
1/2" = 1'-0"

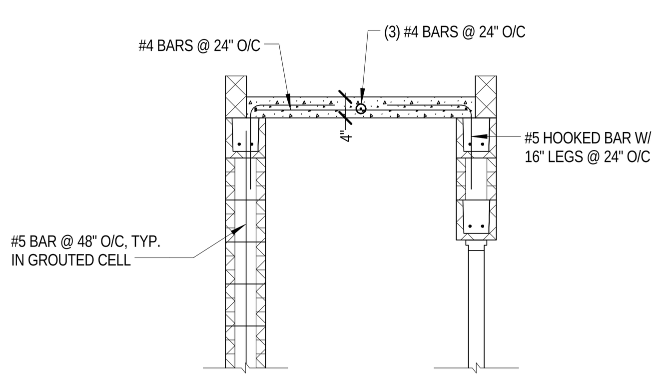

NOTES:

- CONTRACTOR TO PROVIDE SUPPORT FOR C.I.P. LID. FORMWORK SHALL LIMIT SAG TO 1/4"
- C.I.P. LID DESIGNED FOR A UNIFORM LOAD OF 125 PSF.

10 OZONE ROOM CEILING DETAIL
1/2" = 1'-0"

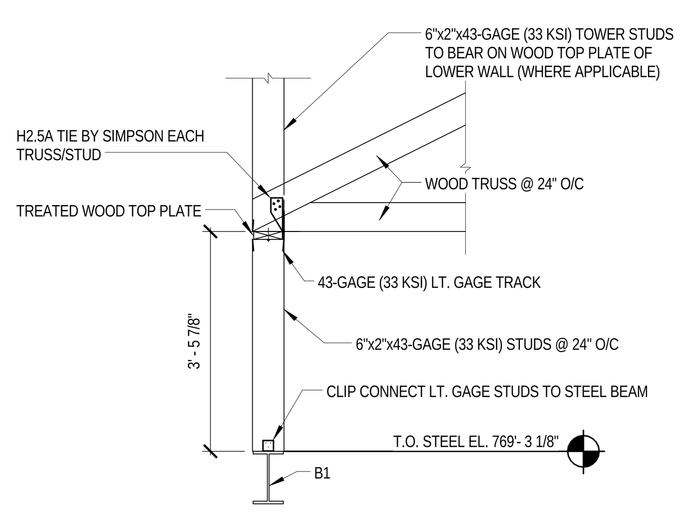

11 TRUSS CONNECTION AT TOWER
1/2" = 1'-0"

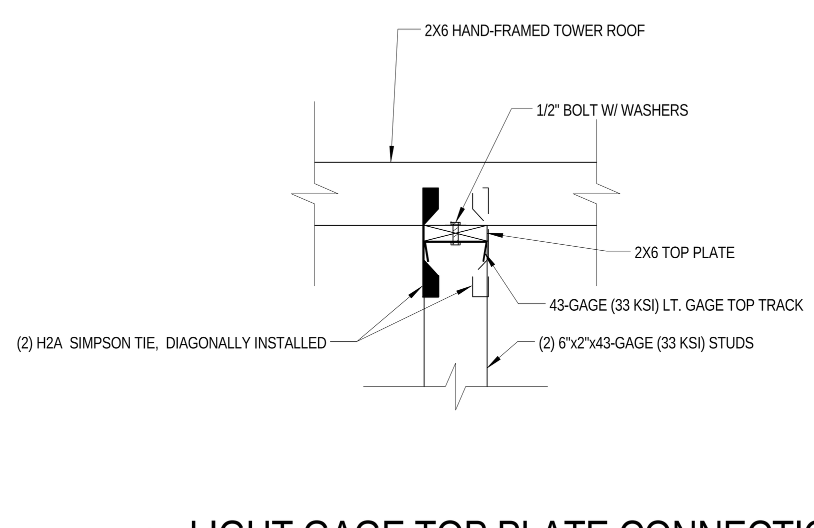

12 LIGHT GAGE TOP PLATE CONNECTION
1" = 1'-0"

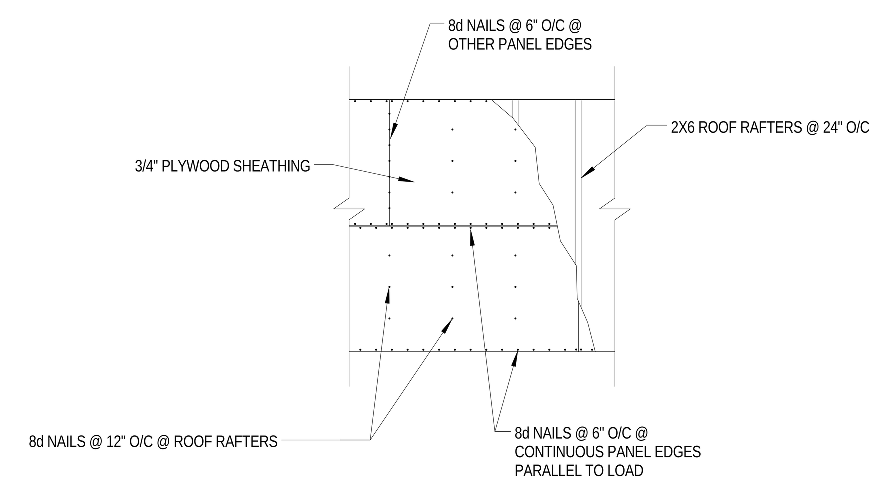

13 ROOF SHEATHING AT TOWER
1/4" = 1'-0"

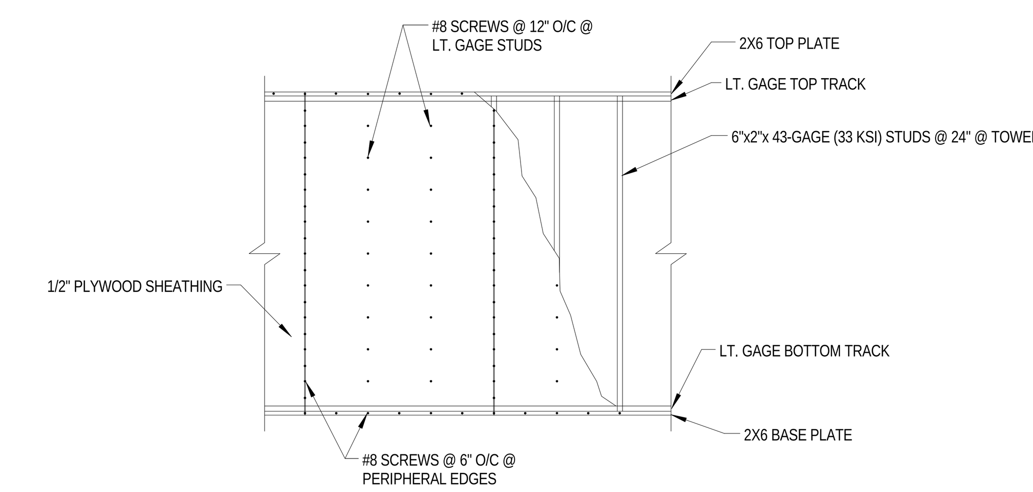

14 WALL SHEATHING AT TOWER
1/4" = 1'-0"

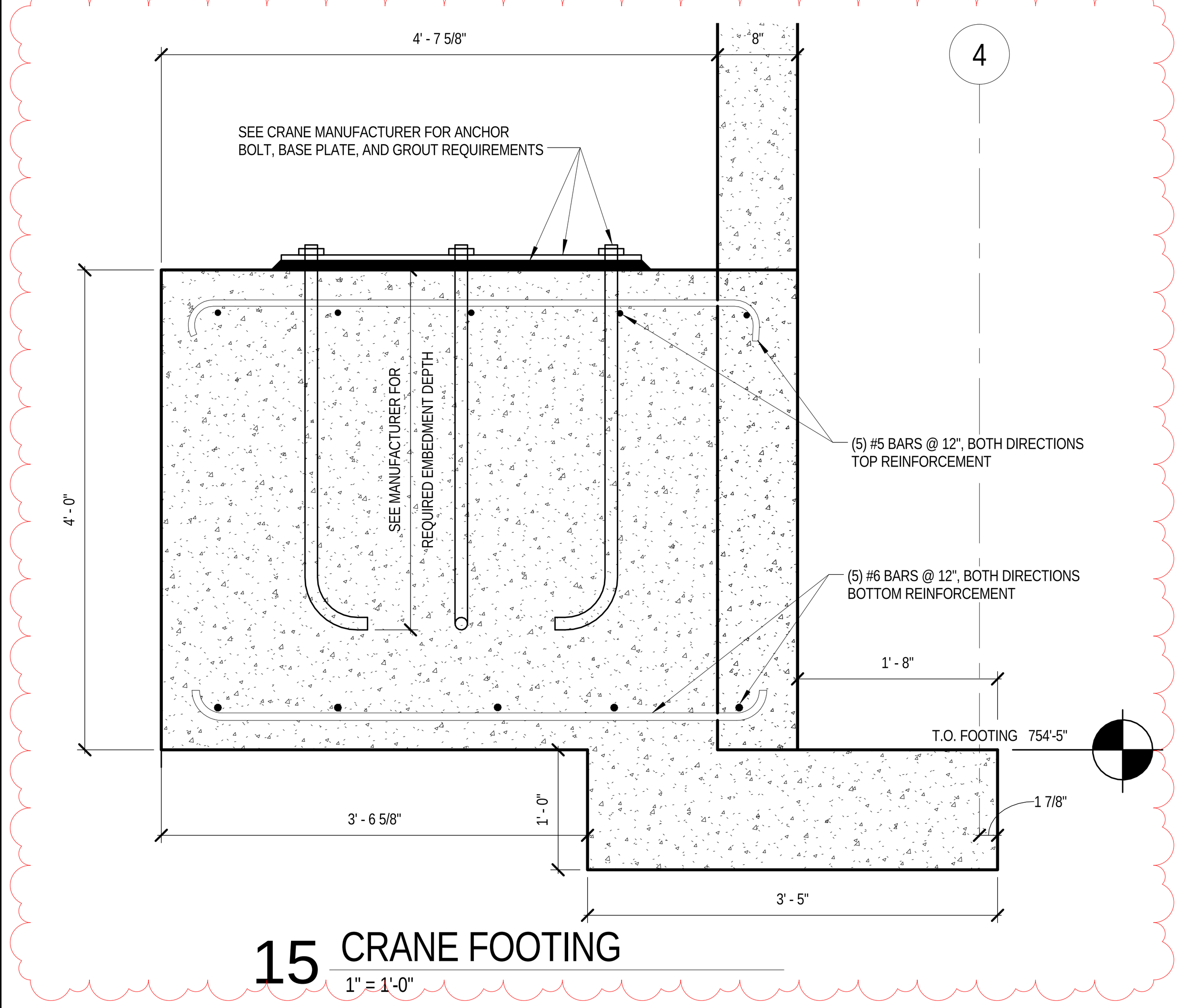

15 CRANE FOOTING
1" = 1'-0"

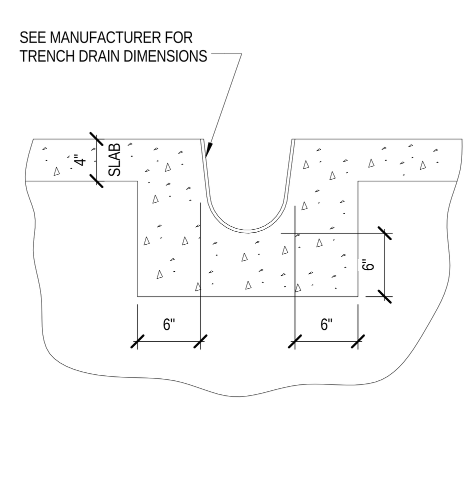

16 TRENCH DRAIN
1" = 1'-0"

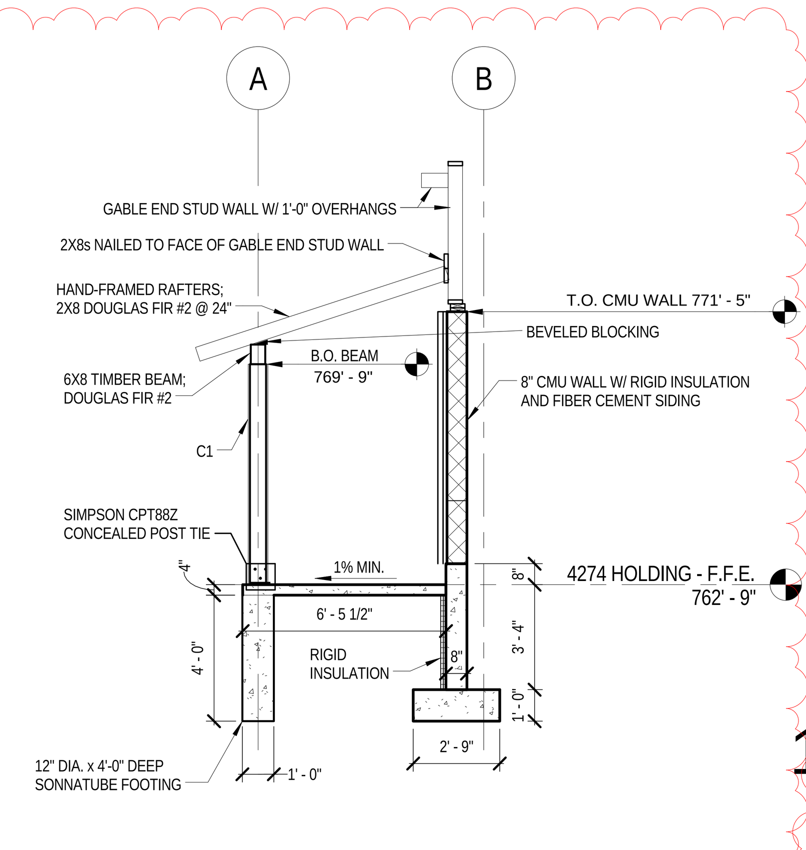

17 SECTION AT PORCH
1/4" = 1'-0"

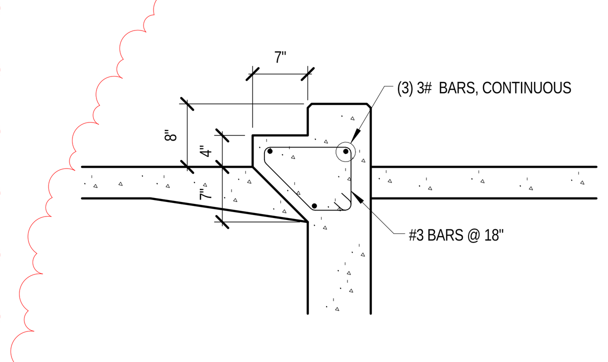

18 STEP AT OTTER POOL
3/4" = 1'-0"

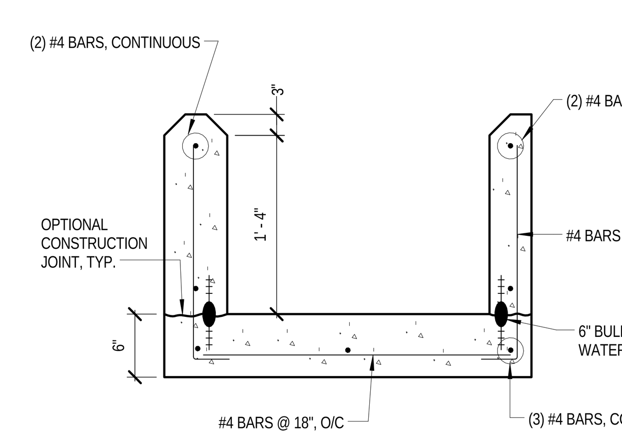

19 OTTER POOL REINFORCING
1" = 1'-0"

NOTE

A FULLY-GROUTED CMU FOUNDATION OF EQUIVALENT NOMINAL WIDTH AND WITH IDENTICAL REBAR CAN BE SUBSTITUTED FOR THE CAST-IN-PLACE FOUNDATIONS SHOWN IN THE DETAILS ON THIS SHEET PROVIDED THE GRADE ELEVATION DOES NOT VARY FROM SIDE-TO-SIDE BY 6" OR MORE, UNLESS OTHERWISE NOTED.

NOTE

A FULLY-GROUTED CMU FOUNDATION OF EQUIVALENT NOMINAL WIDTH AND WITH IDENTICAL REBAR CAN BE SUBSTITUTED FOR THE CAST-IN-PLACE FOUNDATIONS SHOWN IN THE DETAILS ON THIS SHEET PROVIDED THE GRADE ELEVATION DOES NOT VARY FROM SIDE-TO-SIDE BY 6" OR MORE.

PGAV DESTINATIONS
PECKHAM GUYTON ALBERS & VIETS, INC.
200 North Broadway, Suite 1000, St. Louis, MO 63102
(314) 231-7318 WWW.PGAV.COM

WISCONSIN MICHAEL E. BLODGETT E-36475 GERMANTOWN, WI PROFESSIONAL ENGINEER

THE SEAL AND SIGNATURE APPLY ONLY TO THE DOCUMENT TO WHICH THEY ARE AFFIXED, AND EXPRESSLY DISCLAIM ANY RESPONSIBILITY FOR ALL OTHER PLANS, SPECIFICATIONS, ESTIMATES, REPORTS, OR OTHER DOCUMENTS OR INSTRUMENTS RELATING TO OR INTENDED TO BE USED FOR ANY PART OR PARTS OF THE ARCHITECTURAL OR ENGINEERING PROJECT

KSA K. SINGH & ASSOCIATES, INC. Consulting Engineers and Scientists

Accessibility for Persons with Disabilities: This drawing contains layouts and elements critical to providing Access for Disabled Persons. Contractor shall provide verification and certification of Compliance with the applicable accessibility regulations.

Theming Design Intent: The theming scope of work shown on these drawings is for design intent. Outlines, sketches, drawings, picture references, material specifications, and notes on this document are for the express purpose of location, general identification, adjacency, and design intent. Structural design, code compliance, manufacture, installation, and safety of operation are to be provided by the Contractor including engineering documentation signed and sealed by a qualified Engineer licensed to practice by the authority having jurisdiction. The Architect/Designer's review of submittals is for the purpose of checking for conformance with information given and the design concept expressed in the Contract Documents.

ISSUE FOR PERMIT

WALL SECTIONS AND DETAILS 1

DR	CK
NLD	MB
PGAV 75919	CLIENT MCZ

ZOO NEW WEST ENTRANCE & OTTER EXHIBIT
MILWAUKEE COUNTY ZOO
10001 W. BLUEMOUND ROAD, MILWAUKEE, WISCONSIN 53226

Milwaukee County Dept. of Administrative Services
FACILITIES MANAGEMENT DIVISION
Architectural, Engineering & Environmental Services
CITY CAMPUS 633 W. WISCONSIN AVE., SUITE 1000 MILWAUKEE, WI 53203

REVISION:
C 02/26/16

DATE:
08/25/15

PROJECT:
Z150-14452
(PHASE 2)
Z150-14453
Z150-14455

SITE NUMBER:
355

BUILDING NO:
4274

S74.501

2/26/2016 10:49:52 AM

P:\8495 Milwaukee County Zoo Otter Exhibit\Structural\CADD\Revit\75919-00_MCZ_West_Entry_4490_HOLDING_STRUCTURAL.rvt